US00D842246S

(12) **United States Design Patent** (10) **Patent No.: US D842,246 S**
Gan (45) **Date of Patent: ** Mar. 5, 2019**

(54) **MOTOR FOR AN UNMANNED AERIAL VEHICLE**

(71) Applicant: **NINGBO PELICAN DRONE CO., LTD.**, Ningbo (CN)

(72) Inventor: **Tao Gan**, Melbourne (AU)

(73) Assignee: **NINGBO PELICAN DRONE CO., LTD.**, Ningbo (CN)

(**) Term: **15 Years**

(21) Appl. No.: **29/610,236**

(22) Filed: **Jul. 11, 2017**

(30) **Foreign Application Priority Data**

Jun. 21, 2017 (CN) 2017 3 0258380

(51) **LOC (11) Cl.** **13-01**

(52) **U.S. Cl.**
USPC **D13/112**

(58) **Field of Classification Search**
USPC D13/112, 113, 114, 122, 184, 199; D15/5
CPC H02K 5/06; H02K 5/225; H02K 11/33; H02K 9/14; H02K 7/1025; H02K 7/20918; H02K 5/00; H02K 5/02; H02K 5/04; H02K 5/08
See application file for complete search history.

(56) **References Cited**

U.S. PATENT DOCUMENTS

D401,553 S * 11/1998 Pearce D13/112
D401,687 S * 11/1998 Pearce D23/411
D505,720 S * 5/2005 Hsieh D23/411
D610,088 S * 2/2010 Becker D13/114
2007/0086905 A1* 4/2007 Nagata F02M 37/048 417/423.3
2017/0133902 A1* 5/2017 Jang H02K 3/28
2018/0048219 A1* 2/2018 Im H02K 5/163

* cited by examiner

Primary Examiner — T Chase Nelson
Assistant Examiner — Ania Aman
(74) *Attorney, Agent, or Firm* — W&K IP (Wayne & King)

(57) **CLAIM**

The ornamental design for motor for an unmanned aerial vehicle, as shown and described.

DESCRIPTION

FIG. **1** is a perspective view showing my design;
FIG. **2** is another perspective view showing my design;
FIG. **3** is a front view showing my design;
FIG. **4** is a rear view showing my design;
FIG. **5** is a left side view showing my design:
FIG. **6** is a right side view showing my design;
FIG. **7** is a top plan view showing my design; and,
FIG. **8** is a bottom plan view showing my design.
The dashed or broken lines shown in the drawings depict portions of the sonar in which the design is embodied that form no part of the claimed design.

1 Claim, 8 Drawing Sheets

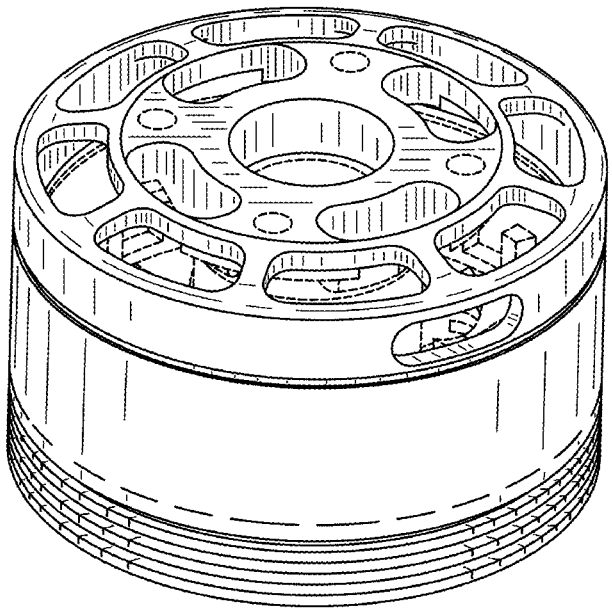

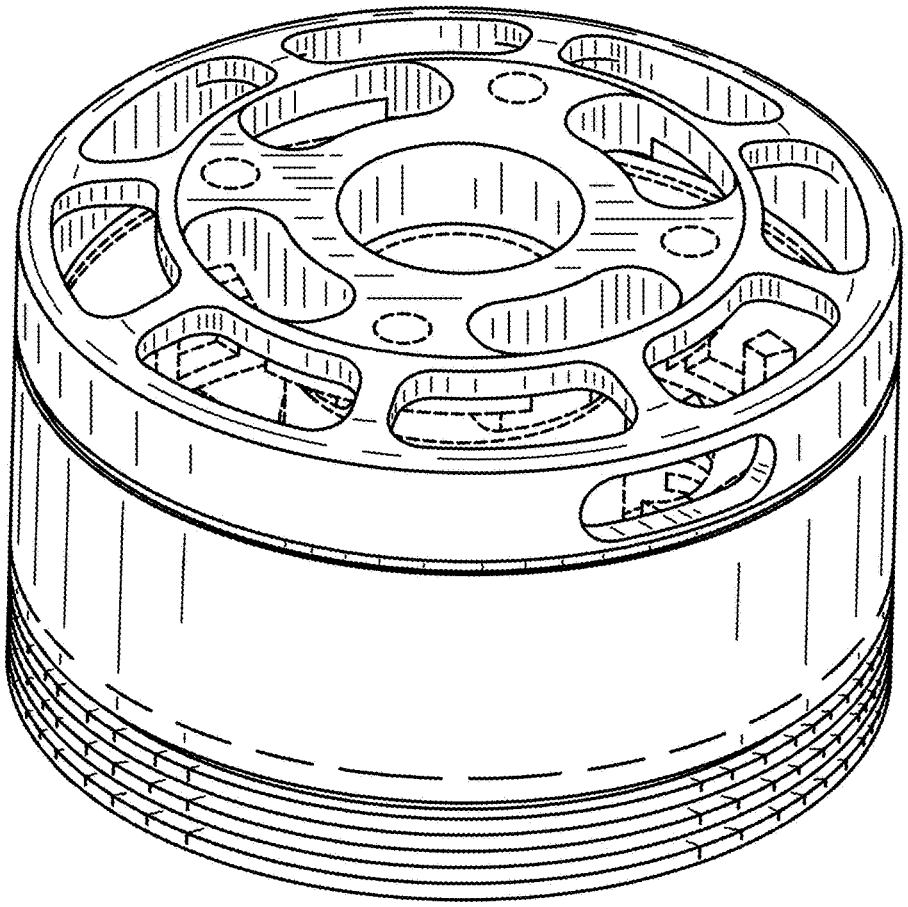

FIG.1

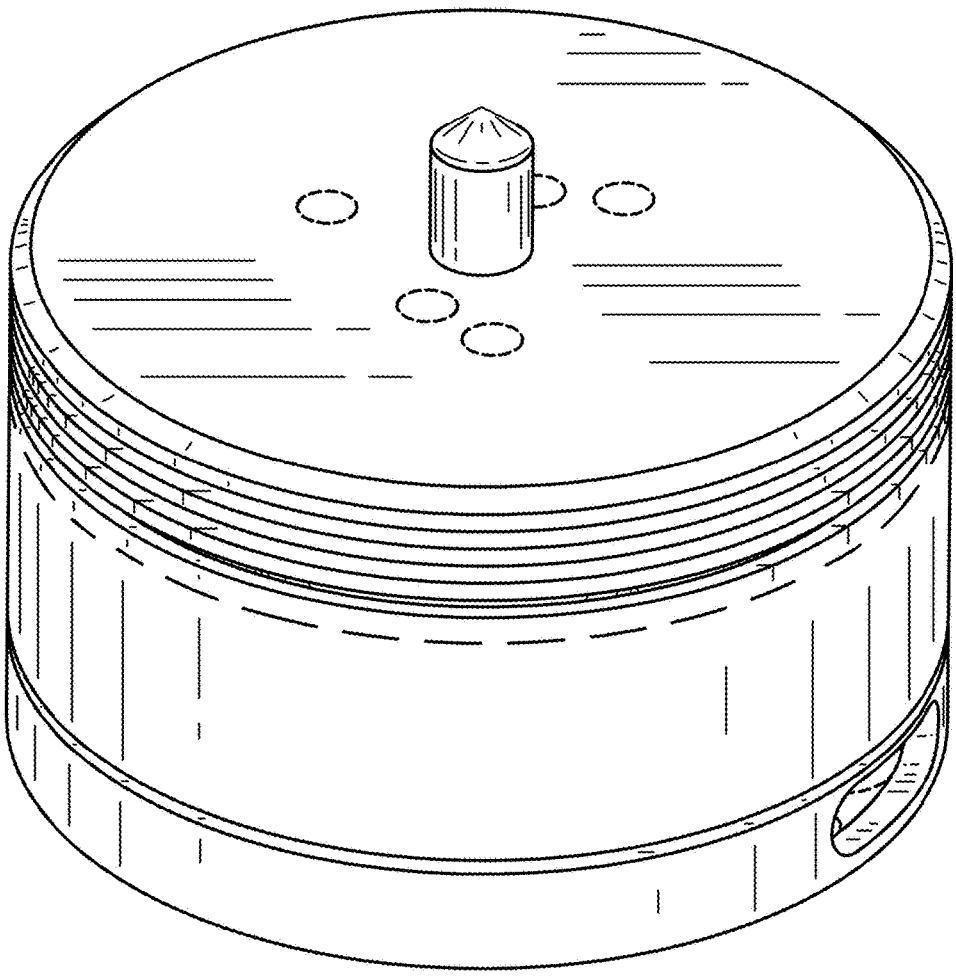

FIG.2

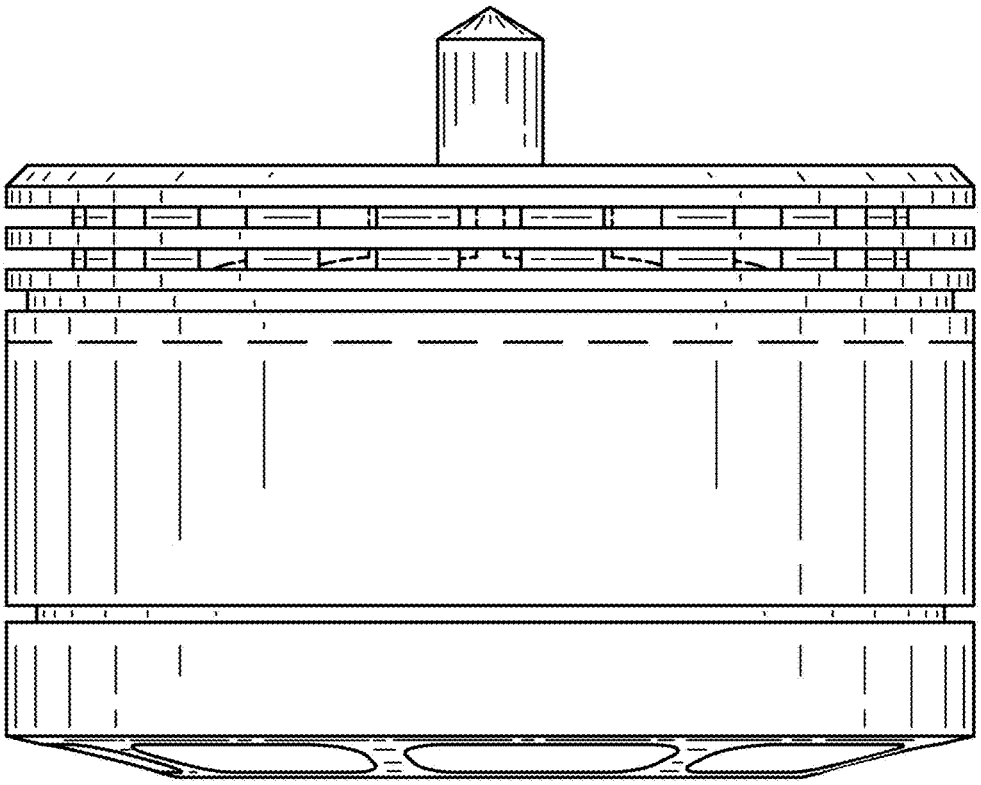

FIG.3

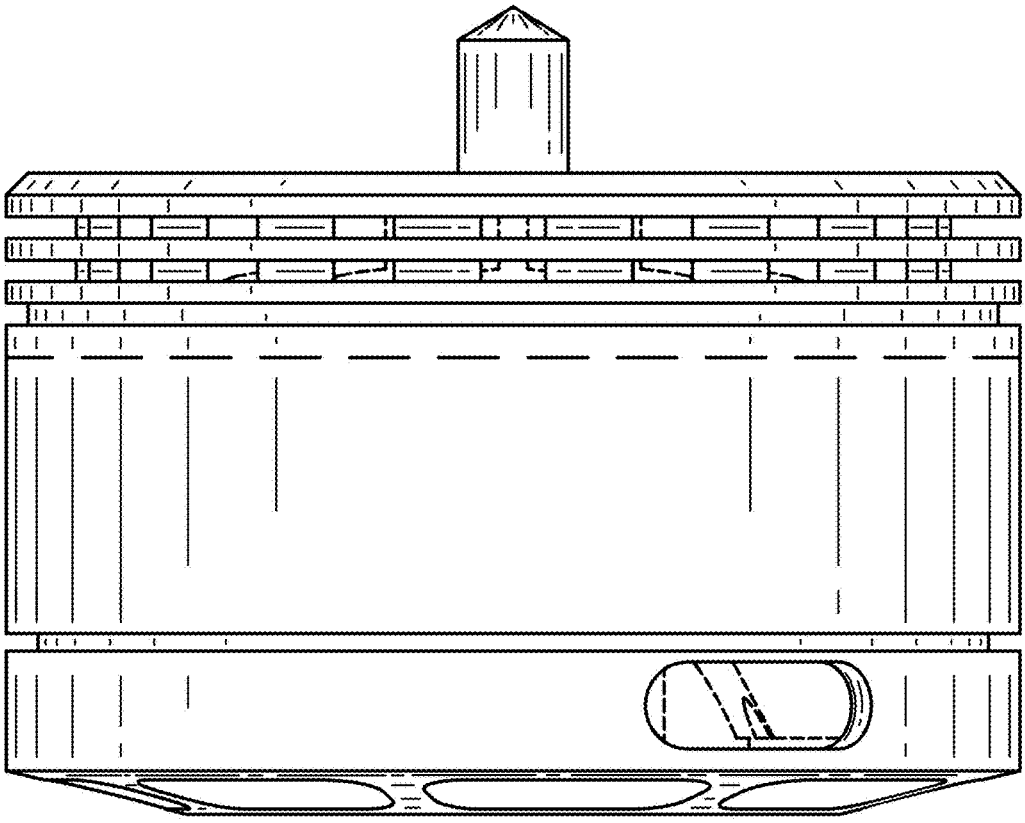

FIG.4

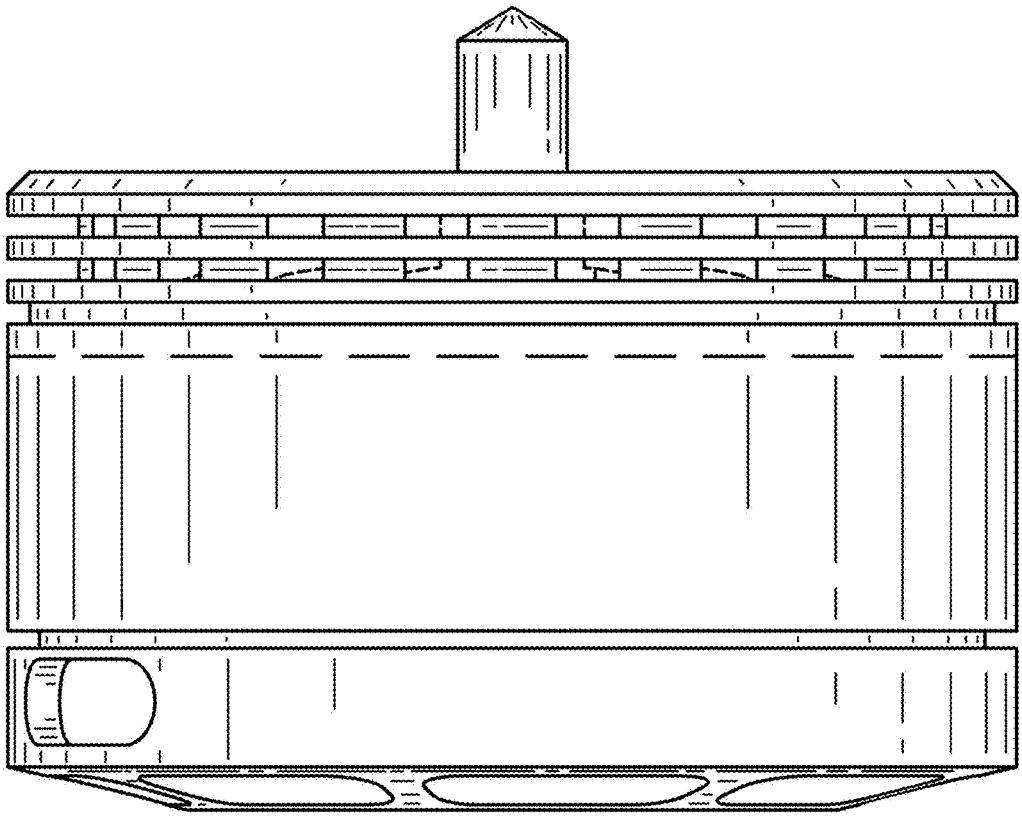

FIG.5

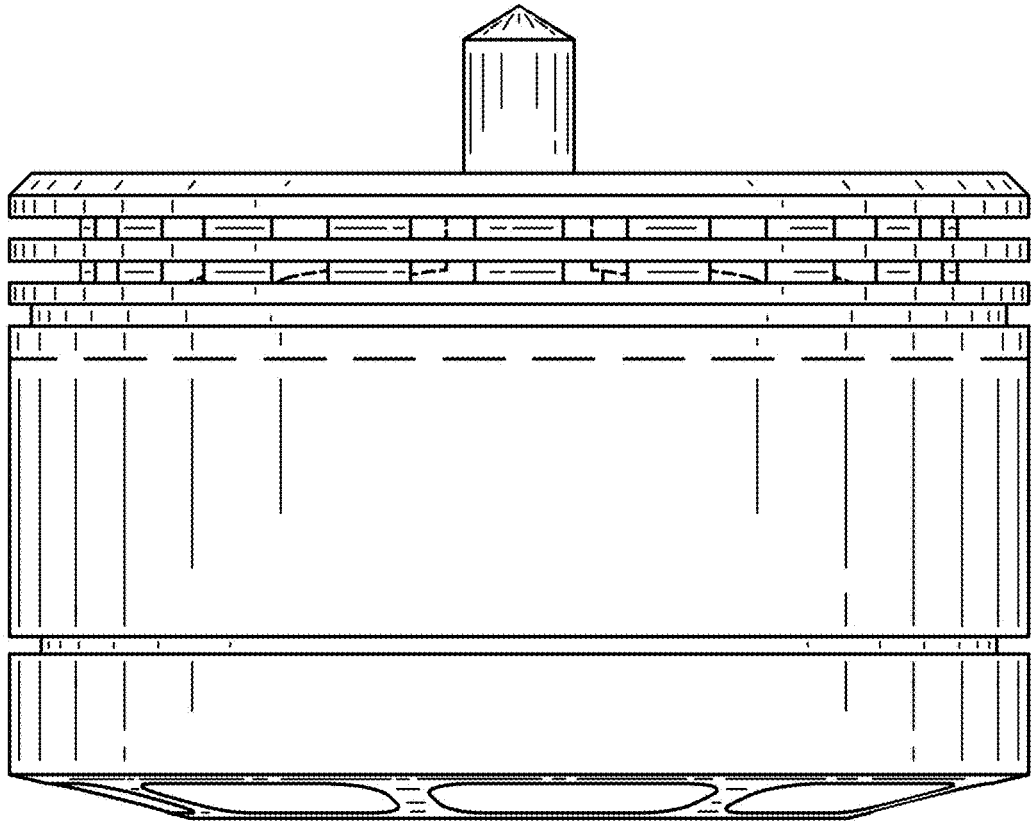

FIG.6

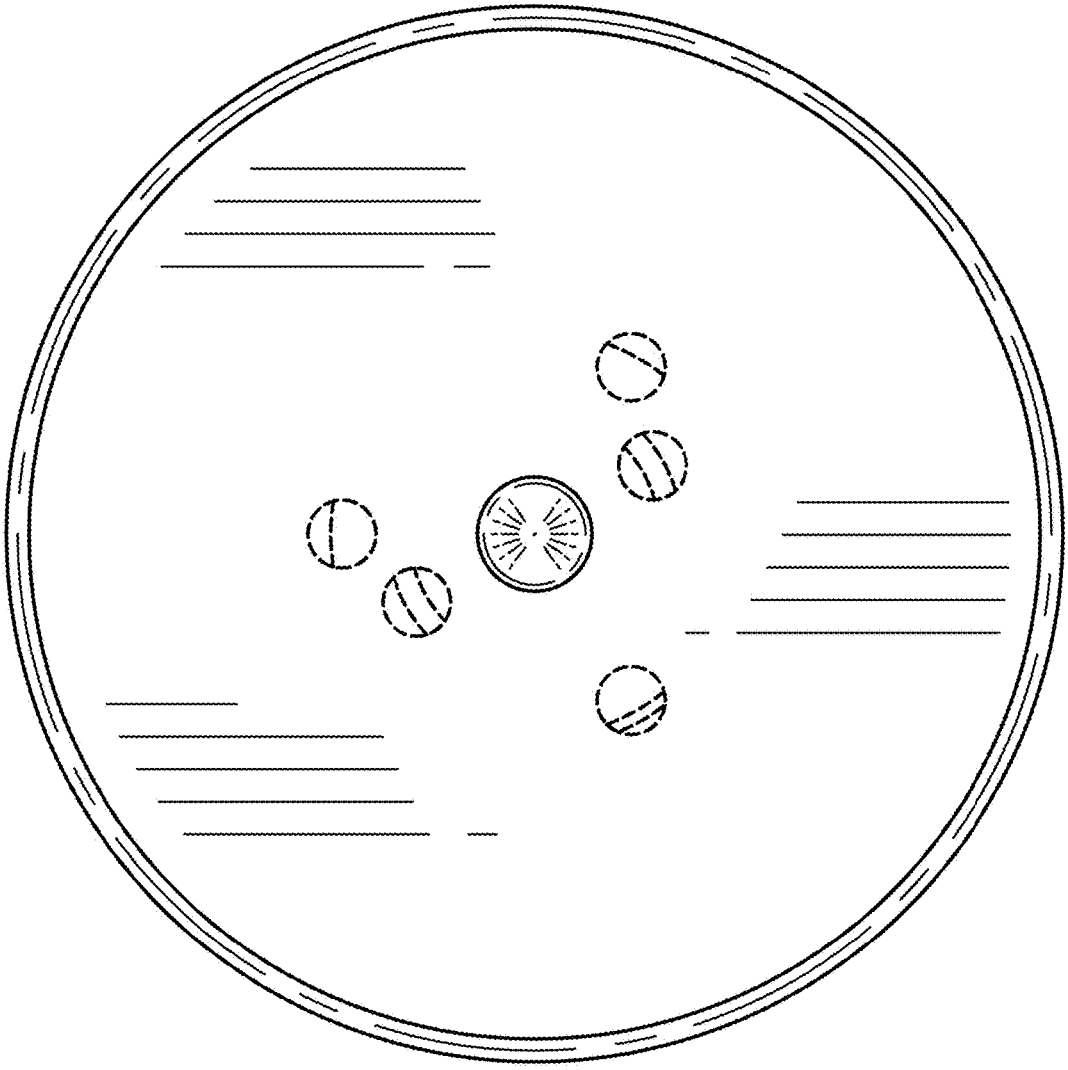

FIG.7

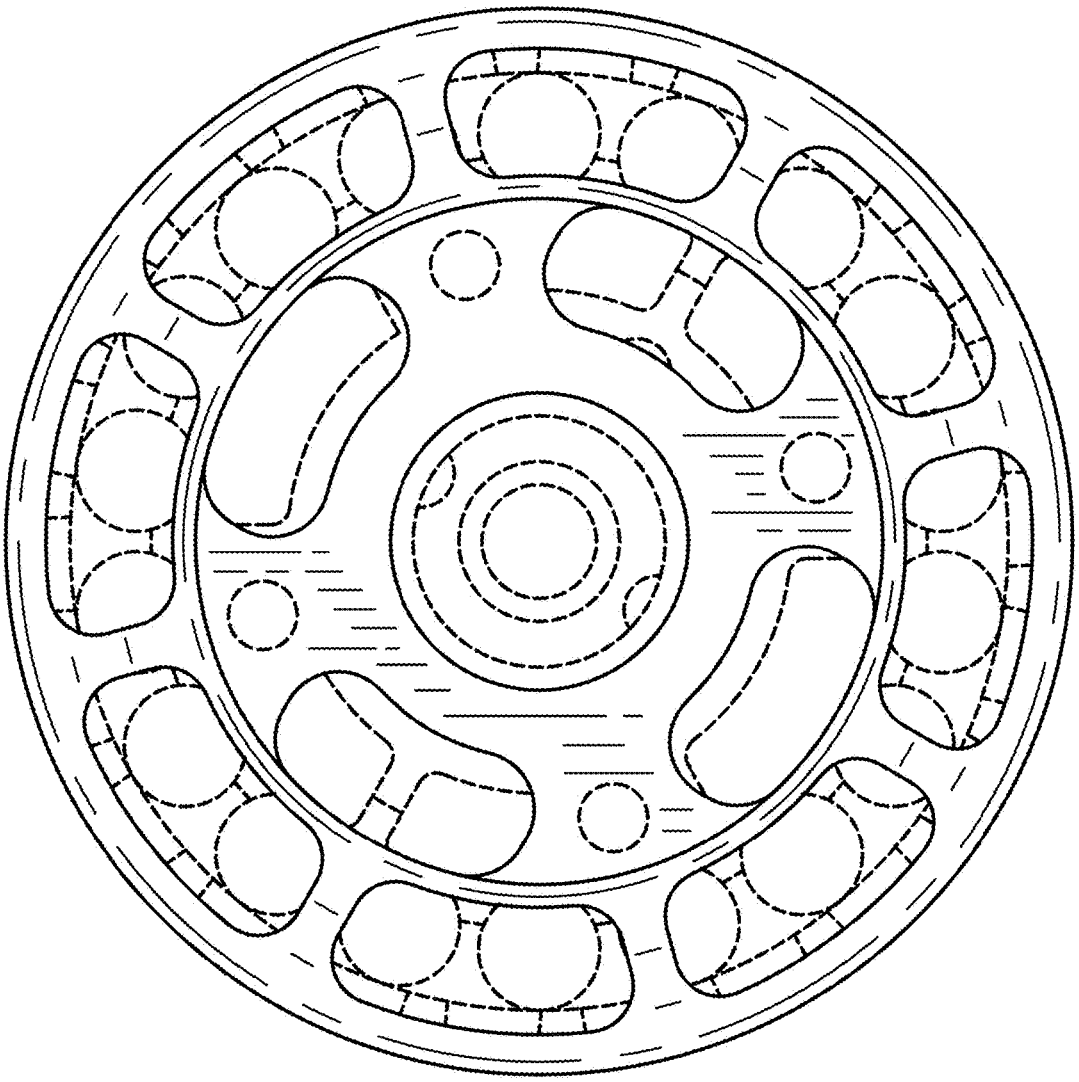

FIG.8