P. H. HENDRICKSON.

CAR STAKE.

APPLICATION FILED OCT. 31, 1912.

1,068,339.

Patented July 22, 1913.

2 SHEETS—SHEET 1.

Fig. 1.

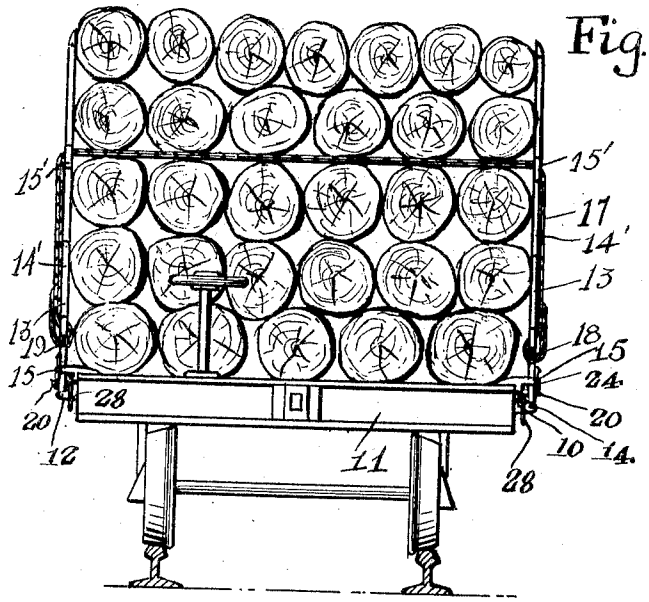

Fig. 2.

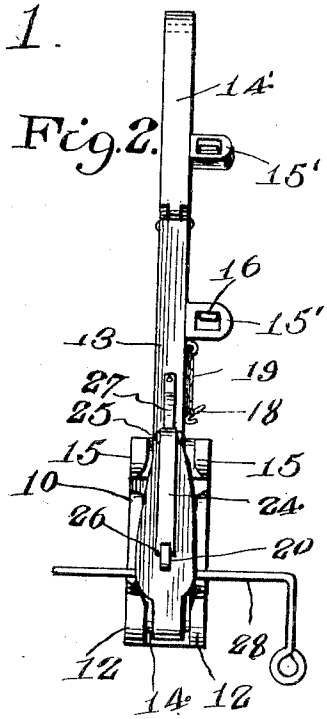

Fig. 3.

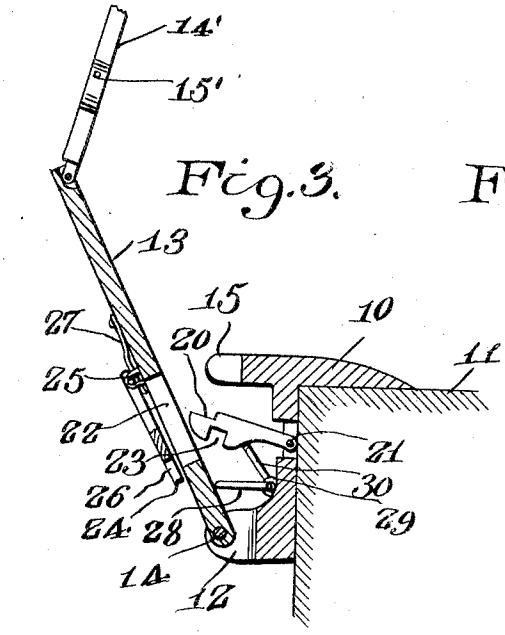

Fig. 4.

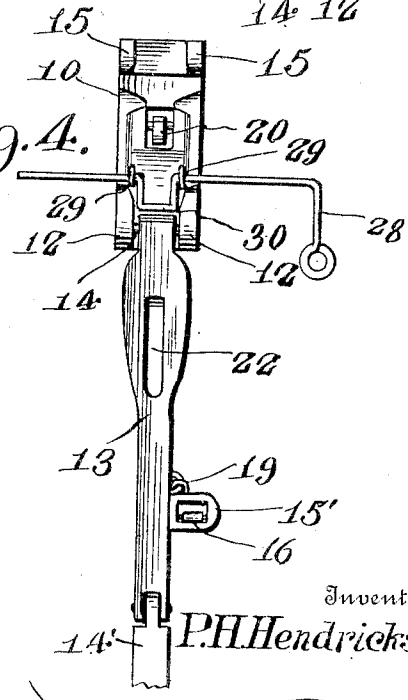

Witnesses

J. P. Wahler

Francis Boyle

Inventor,

P. H. Hendrickson

By Brandeis Brandeis

Attorneys

COLUMBIA PLANOGRAPH CO., WASHINGTON, D. C.

P. H. HENDRICKSON.

CAR STAKE.

APPLICATION FILED OCT. 31, 1912.

1,068,339.

Patented July 22, 1913.

2 SHEETS—SHEET 2.

Fig. 5.

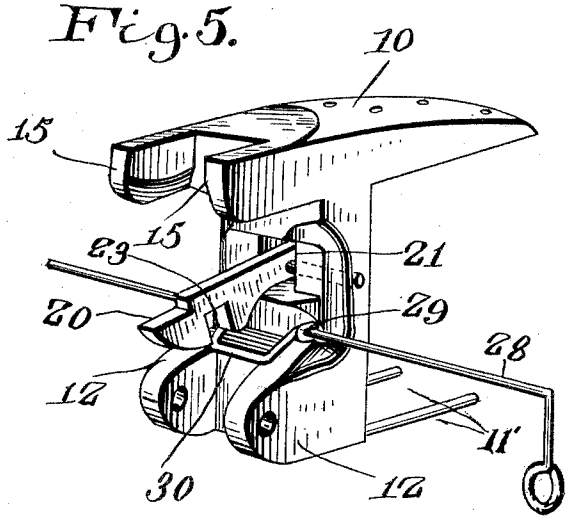

Fig. 8.

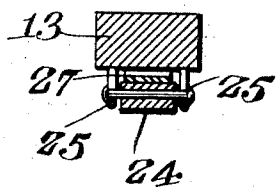

Fig. 7.

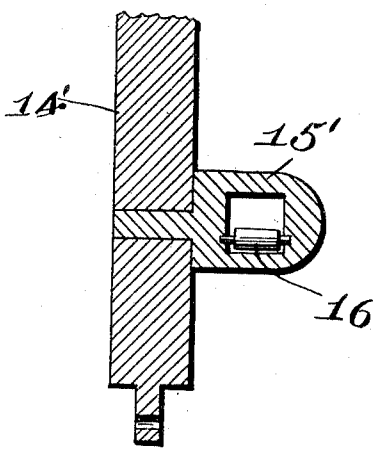

Fig. 6.

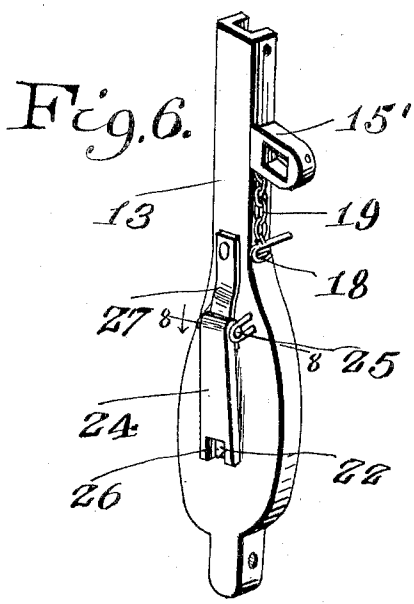

Witnesses:

J. P. Wahler.

Francis Boyle

Inventor,

P. H. Hendrickson.

By Brandeis Brandeis

Attorneys

COLUMBIA PLANOGRAPH CO., WASHINGTON, D. C.

UNITED STATES PATENT OFFICE.

PAUL H. HENDRICKSON, OF IRMA, WISCONSIN.

CAR-STAKE.

1,068,339. Specification of Letters Patent. **Patented July 22, 1913.**

Application filed October 31, 1912. Serial No. 728,878.

To all whom it may concern:

Be it known that I, PAUL H. HENDRICKSON, a citizen of the United States, residing at Irma, in the county of Lincoln, State of Wisconsin, have invented certain new and useful Improvements in Car-Stakes; and I do hereby declare the following to be a full, clear, and exact description of the invention, such as will enable others skilled in the art to which it appertains to make and use the same.

This invention relates to car stakes and has for an object to provide a collapsible car stake which will be composed of a few strong durable parts that will not easily get out of order.

A further object of the invention is to provide a novel locking means for holding the stake in set up position, this means being so constructed as to be unaffected by vibration of the car so that the stake is held against accidental collapse.

With the above objects in view, the invention consists of certain novel details of construction and combination of parts hereinafter fully described and claimed, it being understood that various modifications may be made in the minor details of construction within the scope of the appended claim.

In the accompanying drawings forming part of this specification: Figure 1 is a front elevation of a pair of stakes applied. Fig. 2 is a side elevation of the stake. Fig. 3 is a longitudinal sectional view showing the locking means in released position. Fig. 4 is a front elevation of the stake collapsed. Fig. 5 is a detail perspective view of the car engaging bracket and attached locking means. Fig. 6 is a detail perspective view of the stake with attached locking means. Fig. 7 is a fragmentary longitudinal sectional view through one of the sheaves. Fig. 8 is a cross sectional view taken on the line 8—8 Fig. 6.

Referring now to the drawings in which like characters of reference designate similar parts, 10 designates an angle iron bracket which is designed to embrace the upper corner of a lumber car floor 11 and to be rigidly secured in this position by bolts 11′. The vertical leg of the bracket is provided at the lower end with hinge ears 12 between which the lower end of a car stake 13 is passed and pivotally secured thereby by means of a pintle 14. The said vertical leg is further provided with guide ears 15 which overlie the hinge ears and loosely receive the said car stake 13. The car stake is provided with a hinged extension 14′, and guide eyes 15′ are formed integral with the stake, these eyes being internally equipped with rollers 16 over which the log binding chain 17 is trained as shown in Fig. 1, there being a hook 18 secured to the stake by a chain 19 or otherwise, this hook being adapted to hook into one of the links of the binding chain and hold the latter in operative position.

For holding the stake in set up position, a latch 20 is pivoted in a slot 21 in the vertical leg of the bracket, and is adapted to project through the longitudinal slot 22 formed in the stake 13, there being a notch 23 formed in the bottom edge of the latch adapted to hook over the bottom wall of the slot 22 and hold the stake upright. To prevent the latch from being jarred from operative position by vibration of the car, a keeper 24 is hinged at the upper end to the stake as shown at 25 and is equipped at the lower end with a notch 26 which receives the upper edge of the latch. A leaf spring 27 is interposed between the upper end of the keeper and the outer face of the stake and serves to hold the keeper either in the operative position shown in full lines in Fig. 3 or in the released position shown by dotted lines in this figure.

For releasing the latch after the keeper has been released, a crank shaft 28 is pivoted as shown at 29 to the vertical leg of the bracket, the crank 30 of the crank shaft underlying the lower edge of the latch. The latch normally is in gravitated position in engagement with the car stake as shown in Fig. 3, and upon the crank shaft being manually rocked upward the crank engages with and lifts the latch out of engagement with the stake, with a resultant gravitation of the stake to the position shown in Fig. 4, it being understood that the binding chain and keeper have been released prior to this actuation of the crank shaft. The crank shaft terminates in an eye 31 through which may be trained a pull cord to actuate the crank shaft from a distance.

What is claimed, is:—

A car stake including an angular attaching bracket adapted to embrace the corner of a lumber car floor, a stake hinged at the lower end to one leg of said bracket, guide lugs on said bracket leg loosely receiving

said stake therebetween, a pivoted latch on said bracket leg passing through a slot in said stake and hooking over the bottom wall of said slot whereby to hold said leg upright, a crank shaft pivoted on said bracket leg and having the crank engageable with said latch to rock said latch out of engagement with said stake, and a keeper pivoted at the upper end on said stake and having the lower end notched and receiving the free end of said latch whereby to normally hold said latch in operative position.

In testimony whereof, I affix my signature, in the presence of two witnesses.

PAUL H. HENDRICKSON.

Witnesses:

A. H. SMITH,

W. B. CHILSEN.

Copies of this patent may be obtained for five cents each, by addressing the "Commissioner of Patents, Washington, D. C."