July 22, 1952 J. E. BALES ET AL 2,604,213

COMMERCIAL SHELVING

Filed March 16, 1945 4 Sheets-Sheet 1

Fig. 1.

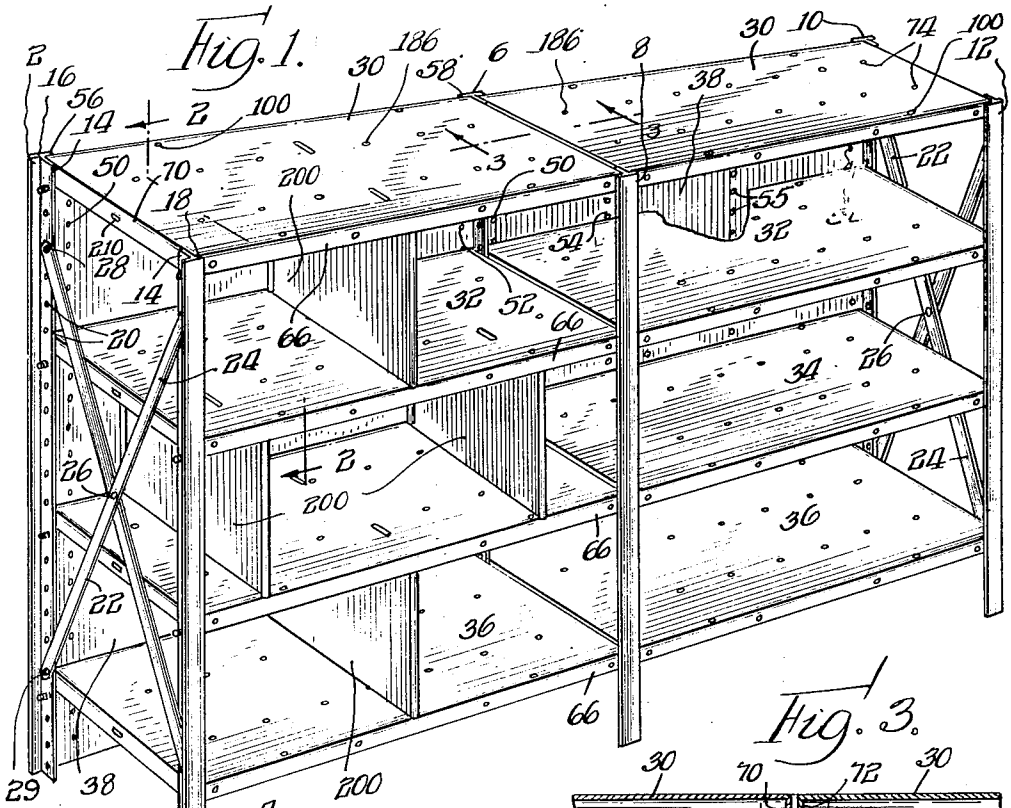

Fig. 2.

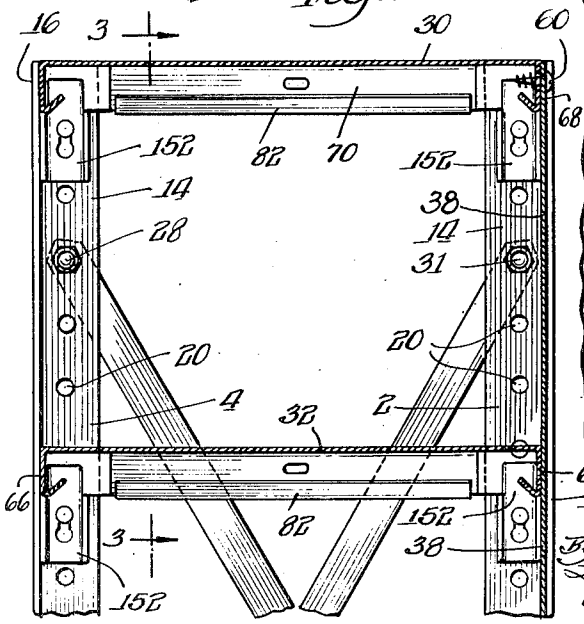

Fig. 3.

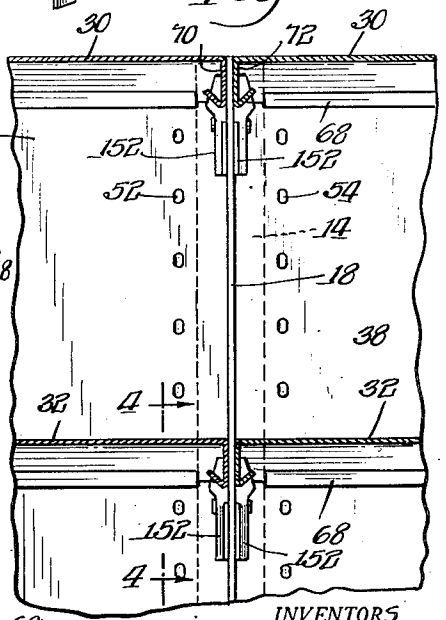

INVENTORS
James E. Bales
Matt Monaco
By: Lyon, Moore, Olson & Treyer
Attys.

July 22, 1952 J. E. BALES ET AL 2,604,213

COMMERCIAL SHELVING

Filed March 16, 1945 4 Sheets-Sheet 2

Fig. 4

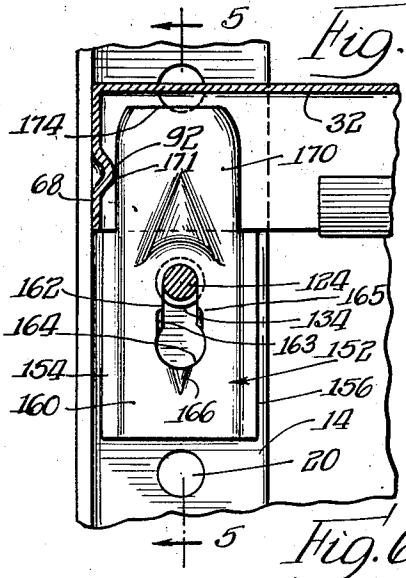

Fig. 5.

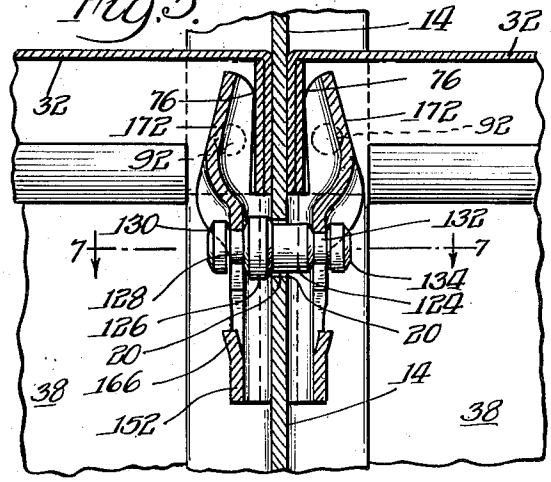

Fig. 6.

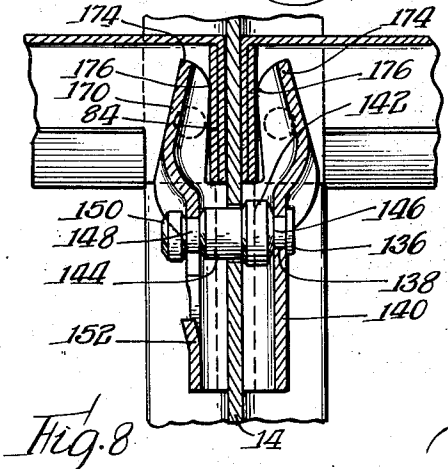

Fig. 7.

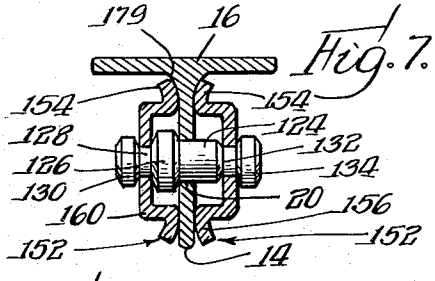

Fig. 8

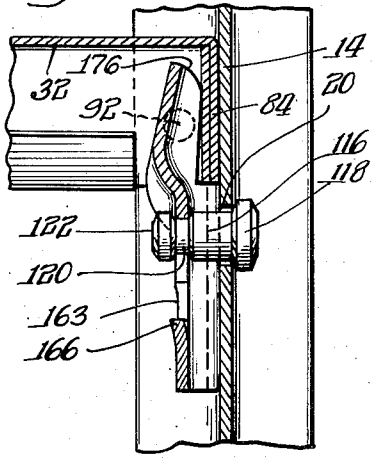

Fig. 9.

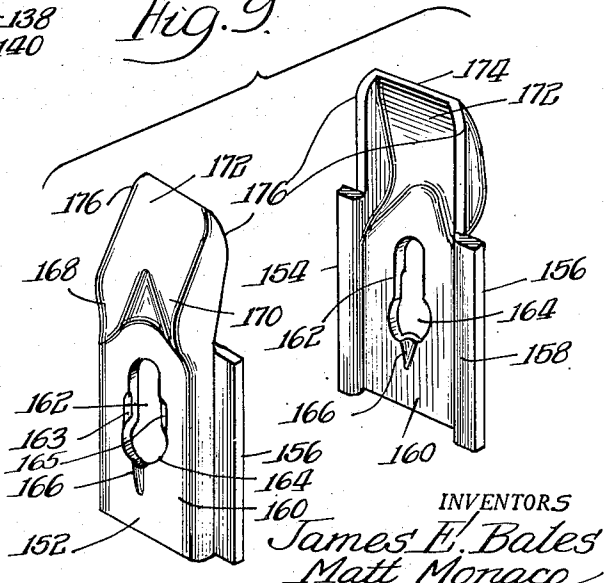

INVENTORS
James E. Bales
Matt Monaco
By Loftus, Moore, Olson & Treder
attys.

July 22, 1952 J. E. BALES ET AL 2,604,213

COMMERCIAL SHELVING

Filed March 16, 1945 4 Sheets-Sheet 3

Fig. 10.

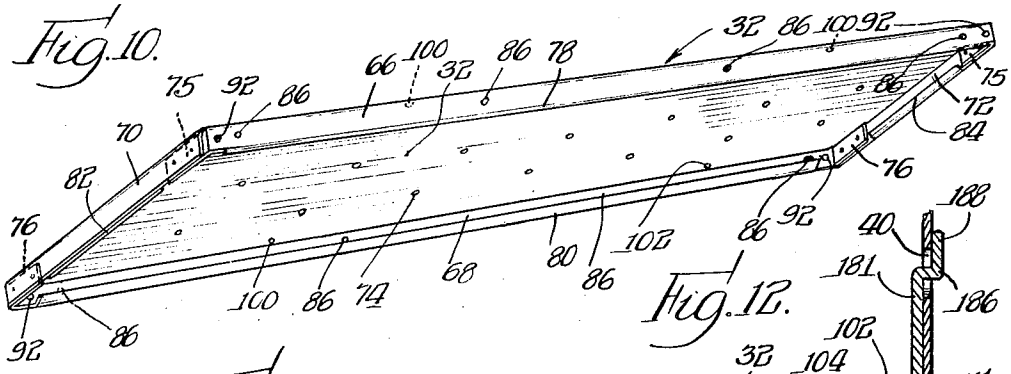

Fig. 11.

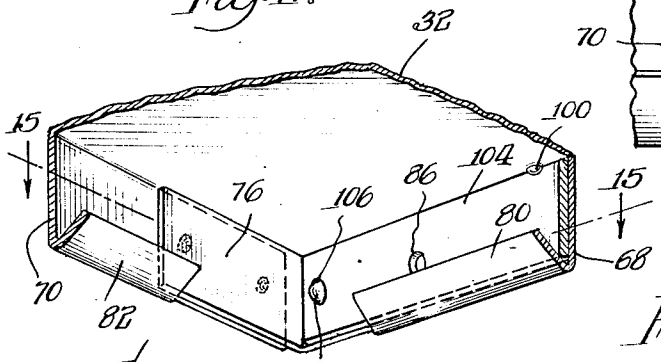

Fig. 12.

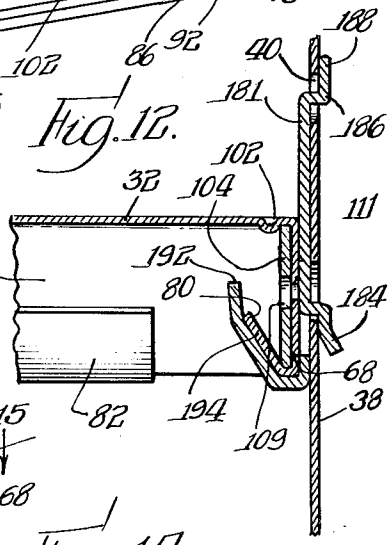

Fig. 13.

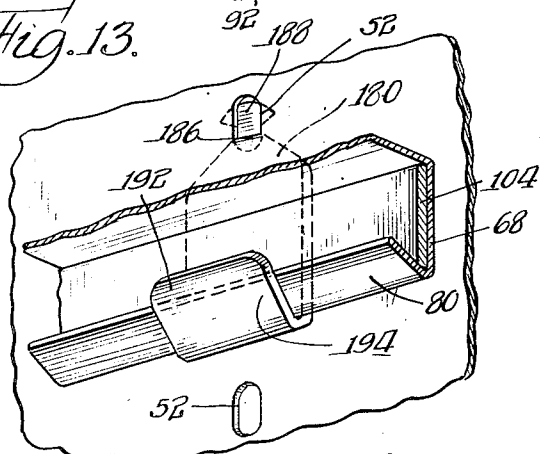

Fig. 14.

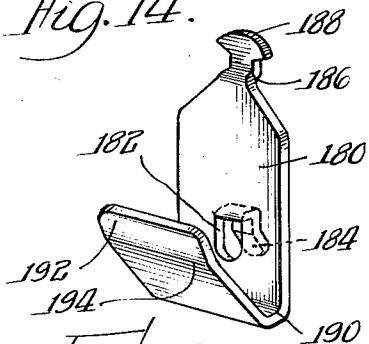

Fig. 16.

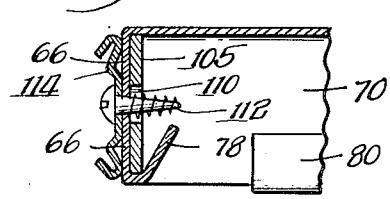

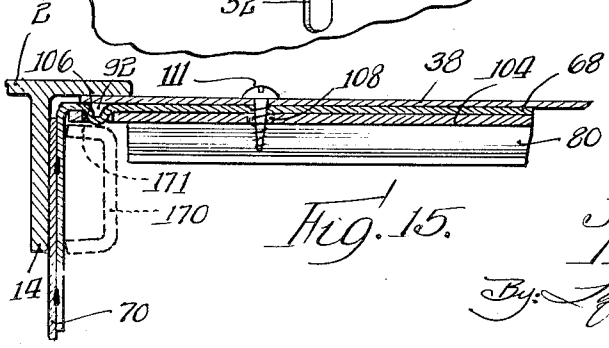

Fig. 15.

INVENTORS
James E. Bales
Matt Monaco
By: Lyttus, Moore, Olson & Trexler
Attys.

July 22, 1952 J. E. BALES ET AL 2,604,213

COMMERCIAL SHELVING

Filed March 16, 1945 4 Sheets-Sheet 4

Fig. 17.

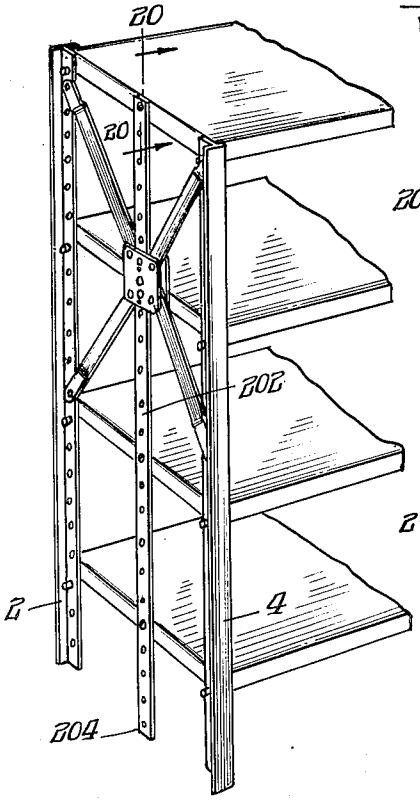

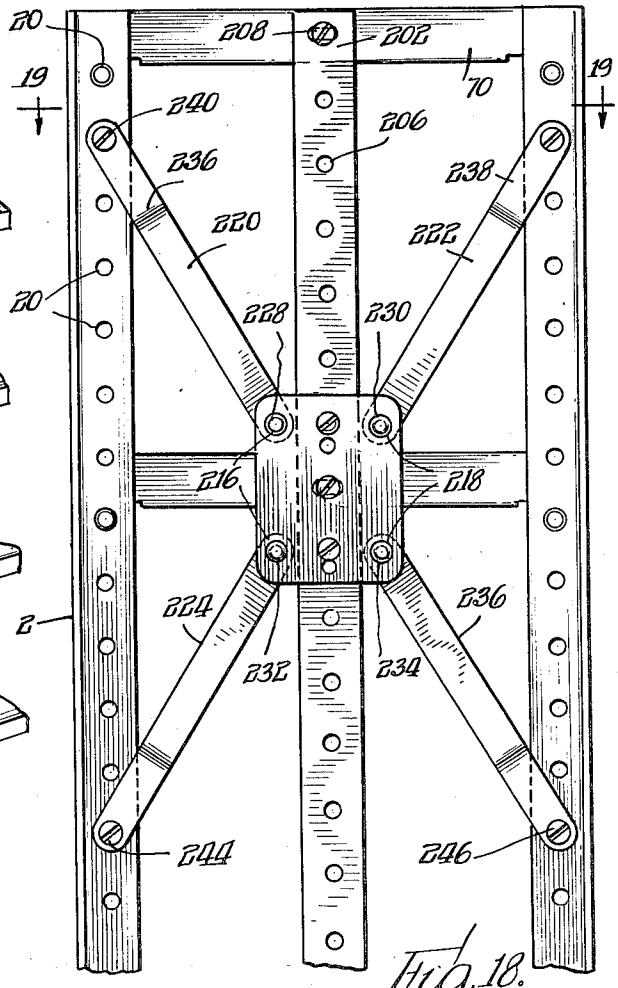

Fig. 19.

Fig. 18.

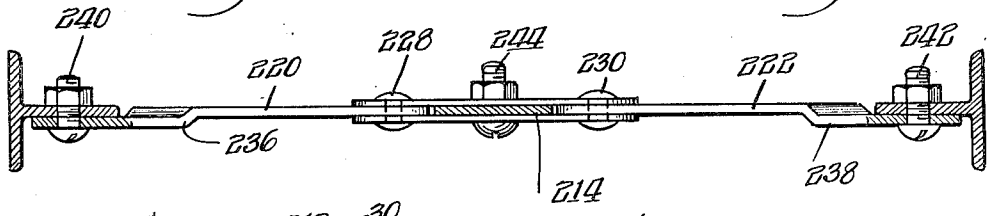

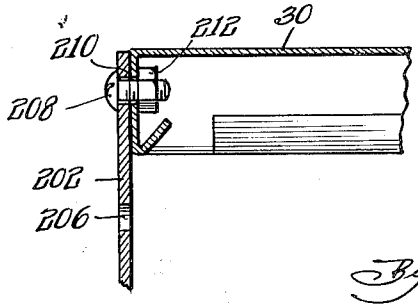

Fig. 20.

INVENTORS.
James E. Bales
Matt Monaco
By: Loftus, Moore, Olstad & Treyler
attys.

Patented July 22, 1952 2,604,213

UNITED STATES PATENT OFFICE

2,604,213

COMMERCIAL SHELVING

James E. Bales and Matt Monaco, Aurora, Ill., assignors to Lyon Metal Products, Incorporated, Aurora, Ill., a corporation of Illinois

Application March 16, 1945, Serial No. 583,028

33 Claims. (Cl. 211—148)

1

This invention relates to shelving and particularly to what is known as commercial shelving, which is a rugged, rigid type of shelving having provision for a number of shelves which may be spaced adjustably thereon.

Among the objects of the present invention is to provide shelving which may be quickly assembled from prefabricated structural shapes, bands and sheet metal parts, and prefabricated shelf clamping means whereby various types of units may be quickly assembled and provided with adjustably placed and rigidly held shelving.

Another object of the invention resides in providing a new type of shelf supporting and rigidifying stud and clamping means for holding shelving in assembled position relative to four or more upright supports constituting the main rugged framework of the shelving.

Yet another object of the invention resides in providing stud means and/or shelf clamping means which stud means is capable of a number of different functional designs for holding either a single shelf or a plurality of shelves on opposite sides of the corner posts, or which stud means is capable of being demountable from its cooperative shelf clamp or riveted thereto.

Yet another object resides in providing a shelf clamp and a fastening stud which cooperate with spaced holes in the uprights and with a hole in the fastening clamp whereby the depending skirt or flange of a shelf may be utilized for rigidly clamping the shelf to the four uprights not only in a detachable manner but also in a very rigid manner to provide a strong commercial shelving.

Yet another object of the invention resides in supporting the rear flange of the shelf from the rear backing plate in such a way that the shelf is supported by a detachable fastening member which is inserted in position from the front of the shelving when the back is not accessible.

Yet another object of the invention resides in providing a construction for providing a stronger supporting portion for the corner of the shelf where it rests upon the shelf clip.

Another object of the invention resides in providing the corners of the shelf with integral dimples to space the clip from the back to allow insertion of the reinforcing band and also to fill the space and contact the side wall of the clip and rigidify the shelf at the point which is usually occupied by the shelf reinforcing band or angle in constructions wherein the reinforcing band or angle is not used.

Yet another object of the invention resides

2

in providing integrally formed dimples in the top surface of the shelf immediately back of the vertical face flange of the shelf to hold the shelf reinforcing band or angle in place without the use of other means.

Yet another object of the invention resides in providing a detachable shelf clip usable in combination with a stud adapted to be inserted in one of a number of spaced holes drilled or punched in the corner uprights or posts of the shelving wherein the clip is provided with a keyhole slot, the stop portion of which is preferably at the bottom of the slot, the clip having side flanges for properly positioning the clip onto one of the flanges of the corner post, said clip having embossments for clamping the shelf flange or skirt tightly to the flange of the corner post and having embossments for reinforcing the clip around the stud head that fits into the key slots of the clip.

Still another object of the invention resides in providing a stud having a number of different conformations for different purposes of fastening and also for providing a shelf clamping clip for cooperative use with one or the other of the different types of studs, both the stud and the clip being capable of use in rigidly fastening and clamping or locking the flange of the shelving to the flanges of the corner posts or uprights whereby a very quick assembly and very quick demountability of the shelving from the corner posts is provided.

Yet another object of the invention resides in providing shelving or a shelf and a top of the shelving with partition means which is adapted to be locked to the shelving or to the shelving and the top thereof for further rigidifying the shelf structure with the framework of the shelving.

Another object resides in providing in open type shelving a combined cross brace and shelf end support constructed and arranged so that when the shelves are loaded with relatively heavy materials the load is supported on the uprights or corner posts.

Other and further objects of the invention will be apparent from a perusal of the following specification when taken in connection with the accompanying drawing, wherein:

Figure 1 is a view of two of the shelving units assembled side by side;

Figure 2 is a section taken on the line 2—2 of Figure 1;

Figure 3 is a section taken on the line 3—3 of Figure 2;

Figure 4 is a section taken on the line 4—4 of Figure 3;

Figure 5 is a section taken on the line 5—5 of Figure 4;

Figure 6 is a view of a modified form of stud;

Figure 7 is a section taken on the line 7—7 of Figure 5;

Figure 8 is a view of another form of stud, the clamp being shown in section;

Figure 9 shows perspective views of a pair of clips;

Figure 10 is a perspective view of one of the shelves;

Figure 11 is an underneath view of a shelf showing the manner of forming the corner;

Figure 12 is a sectional view of the shelf-to-back clip;

Figure 13 is a front view showing the rear flange of the shelf and shelf-to-back clip;

Figure 14 is a perspective view of the shelf-to-back clip;

Figure 15 is a view showing a section of the shelf corner;

Figure 16 is a sectional view of the front of the shelf showing the manner of applying the label holder thereto, or to the back;

Figure 17 is a perspective view of one end of the shelving with the cross brace and shelf end support in position;

Figure 18 is an enlarged view of the brace;

Figure 19 is a section taken on the line 19—19 of Figure 18; and

Figure 20 is a section taken on the line 20—20 of Figure 17.

Referring now to the drawings in detail, the invention is shown as comprising, for any particular unit of shelving, four corner posts or uprights 2, 4, 6 and 8, preferably in cross section of T design. Where two units are to be used, as shown in Figure 1, two additional corner posts 10 and 12 are provided. In the preferred construction each one of these corner posts is a substantially rugged angle iron of T-shaped cross section and adjacent corner posts are arranged so that the legs or central web portions 14 of each T post are facing and confronting each other and are arranged in a common vertical plane. As shown in Figure 1 the flat T portions 16 and 18 of each corner post are arranged in parallelism at back and front respectively. The central web portion 14 of each T-shaped angle iron is provided with a longitudinally disposed series of spaced apart holes 20 to receive studs as hereinafter disclosed. In addition, when the shelving is used to support moderate loads, means is provided for bracing the end pair of corner posts which comprises two elongated straps 22 and 24 which are riveted together centrally as at 26. These straps are thus formed in X-shaped formation and have their outer ends bolted as at 28, 29 and 31, said bolts passing through the vertical openings 20 of the vertical corner posts whereby to further rigidify these two corner posts. The opposite end is likewise braced, the bolts passing through selected ones of the holes 20 in the web portion 14 of the T-shaped corner posts.

Each of the commercial shelving units comprises a top 30 of sheet metal and a plurality of shelves 32, 34 and 36. One of the shelves 32 is shown in perspective in Figure 10 of the drawings. In addition, in certain desirable instances the shelving is provided with a sheet metal back 38, see Figures 1 and 12, which back is provided with four vertical series or rows of spaced apart, elongated holes, each of the outer rows such as

50 and 52 being preferably arranged near the vertical edges of the back and the third and fourth intermediate rows 54 and 55 being evenly spaced or arranged centrally vertically of the back. The vertical edges of this back are clamped between the inside vertical flanges 56 and 58 of the corner post and the top 30, hereinafter mentioned, and screws, preferably self-threading screws 60 pass through the topmost one of the vertical holes and through the top flange, and in addition a screw will pass through any one of the outside vertical rows such as 50 and 52 and through a corresponding hole in the vertical rear flange of a shelving member when particularly positioned with respect to the vertical rows of holes 50 and 52 whereby rigidly to hold the back in position. The central row of holes in the back is provided to receive a supporting clip or screw, as will be later described, for supporting the rear flange of the shelf intermediate its central portion.

Each shelf member 32 is formed of desired gauge sheet metal and is provided with depending flanges, there being a front flange 66, a rear flange 68, and two end flanges 70 and 72. The flanges are formed integrally with the top of the shelving and the top is provided with a series of holes 74 arranged in substantially rectangular spaced formation, as shown in Figure 10, for the reception of partition fastening means. At the corners the depending flanges are provided with overlapping extensions. For instance the front flange 66 and the rear flange 68 are provided with extensions 75 and 76, respectively, which are bent angularly with respect to the plane of the front and rear flanges 66 and 68 and these flanges underlie the ends of the side flanges 70 and 72, being suitably welded thereto whereby to provide at the corners a rugged construction, of double thickness. Each top flange 66, 68, 70 and 72 is provided with an integral, inwardly and upwardly projecting extension 78 for the front, 80 for the back, and 82 and 84 for the two end extensions of the end flanges. In addition the front and rear flanges are provided with four screw openings 86. Relatively close to the end depending flanges 70 and 72 at front and back, the front and rear flanges 66 and 68 are provided with inwardly depressed, integral dimples 92, see Figures 11 and 15, which are placed so that the bottom portions of these dimples are relatively close to the plane of the vertical side wall of the end flanges 70 and 72, and these dimples are positioned substantially midway of the height of the front and rear flanges 66 and 68. In addition the top of each shelving is provided along the front and rear walls with downwardly bent integral dimples 100 and 102, see Figures 10, 11 and 12.

In certain instances the front and rear flanges 66 and 68 are reinforced by a band or angle or strap such as 104, see Figures 11, 12 and 15, which is confined between the upturned lip 80 of the depending skirt 68, or in the case of the front flange, the skirt 66 and the metal of the flat top 32. It will be noticed that the dimples 102 are placed as indicated in Figure 12 so that they hold this band or angle 104 in position. The opposite ends of this band, angle or strap 104 are provided with apertures or notches 106 at the opposite ends thereof and also with additional apertures 108, see Figure 15. The apertures 108 register with screws 111 which may be used to secure the rear flange 68 of a shelf in position when the clips shown in Figure 14 are not used.

These screws 111 will be screwed through openings in the back 38, thence through registering openings in the rear depending flange 68 of the shelf and thence through the holes 108 in the bands 104 when the bands are used. The apertures 106 shown in Figures 11 and 15 are formed so that they span the dimples 92. It is to be understood that instead of using the hole 106 the ends of the band 104 may be slotted out to provide notches. The purpose of these dimples and the holes or notches 106 is shown more clearly in Figure 15. It is understood, of course, that the band 104 may be an angle, in which case the flange of the angle would be notched or would be provided with a hole, whichever is preferable. By reference to Figure 15 it will be seen that where the band 104 is utilized for reinforcing and rigidifying the shelf, sufficient room must be allowed and maintained between the adjacent wall or face 171 of the clip 170 and the inner wall of the depending flange 68 of the shelf. To this end the dimple 92 is made of sufficient depth so that when the rear skirt or flange 68 of the shelf is juxtaposed against the front or inner wall of the back as shown in Figure 15, the dimple 92 will lie adjacent and practically in contact with the inner wall 171 of the clip 170 which has been placed in position as shown in Figures 5 and 6. Therefore this dimple will fill this space, and, in short, will provide sufficient space between the inner wall 171 of the clip 170 and the inner wall of the flange 68 of the shelf so that the reinforcing or rigidifying band 104 can be inserted in the flange. This dimple contacting the inner wall 171 of the rigidly mounted clip 170 will thus push the rear flange 68 of the shelf rearwardly snugly against the back wall 38 and will allow room for the insertion of the band 104. Thus when we place the shelf in position and the band 104 in position within the rear skirt of the shelf, the holes 106 merely span the dimples 92 and thus allow the band to be placed in position, and at the same time provide a certain rigidity in the corners of the shelving due to the dimple lying between the rigid inner wall 171 of the clip 170 and the back wall 38, see Figures 4, 5, 6 and 15, particularly Figures 4 and 15.

As shown in Figure 16 the front strap, band or angle 105 is provided with a hole 110 registering with the screw 112 that secures the label holder 114 to the front flange 66 of the shelf or to the back 38. When access may be had to the rear wall of the back 38 of the shelving, self-tapping screws 111, as shown in Figure 15, are used for holding the rear flange 68 of the shelf rigidly in position. These screws 111 pass through preformed openings in the back and thence through openings formed in the rear skirt 68 of the shelving and thence through preformed openings 108 in the band 104, as shown in Figure 15. When access cannot be had to the rear wall of the cabinet, as for instance when the shelving is backed up against a wall or when two shelvings are back to back, then the clips shown in Figure 14 are utilized for supporting the rear flange of the shelf in the manner shown in Figures 12 and 13, reference to which will be hereinafter made.

Means is provided for clamping the shelves adjustably in position with respect to the corner uprights. This means comprises spaced holes in the central web of the upright, the studs which are shown in Figures 5, 6, 7 and 8, and the clips shown in Figure 9. In Figure 8 one of the studs is shown as comprising a central

round barrel-like portion 116 having at one end a cap 118 of larger diameter; the opposite end of the central barrel-like portion is provided with a neck 120 of smaller diameter which terminates in a cap 122 somewhat of the shape of the cap 118 but of smaller diameter than the cap 118 but of larger diameter than the neck 120. This stud is shown as positioned in one of the holes 20 of the portion 14 of the post.

In Figure 7 I have shown another form of stud which comprises the central round barrel-like portion 124 positioned in a hole 20, a cap portion 126 of larger diameter connected to the portion 124 which cap portion merges into a neck 128 of smaller diameter and which in turn terminates in a second cap portion 130 which is of larger diameter than the neck portion 128 but of smaller diameter than the cap portion 126. The cap portion 130 is of smaller diameter and construction to the cap 122 of the stud shown in Figure 8.

In addition, the outer end of the round barrel 124 terminates in a second neck 132 which in diameter is substantially the same as that of the neck portion 128 and this neck portion 132 in turn terminates in a third cap portion 134 which is similar in size and construction to the opposite terminal cap portion 130. Figure 5 shows this same type of stud.

The studs shown in Figure 6 are the same as that shown in Figure 7 except that in place of the cap 130 the end of the stud is provided with a rivet 136 by which the stud is affixed integrally to a hole 138 in a clip 140 so that this clip 140 and the stud are fixed together. This stud has a cap portion 142, a round barrel portion 144, a neck portion 146 and an oppositely disposed neck portion 148 terminating in a second cap 150. Thus in this construction the clip 140 carries the stud and the neck portion 148 is adapted to carry another clip 152. It is understood that there are a number of these clips 152 and there may be a number of the special clips 140 carrying studs. In most instances the clips and studs are separable. The studs are preferably formed of metal and are made in any desired manner.

It is to be understood that the studs are inserted through the registering holes in each web 14 of the four corner posts so that the studs will all be in a common plane with relation to the vertical series of holes 20 in the upright corner posts 2, 4, 6 and 8. The large keyhole clips are then inserted through the inwardly projecting ends of these studs so that the clips are in position such that the necks of the studs register with the enlarged portions 164 of the keyhole slots. The clips are then pushed down on the shanks or necks 124 of the studs so that the clips enter the narrow portion 162 of the slots, which means that the clips are then rigidly affixed to the uprights as shown clearly in Figures 4, 5, 6 and 7.

The clips are shown in perspective in Figure 9. They comprise two opposed flanges 154 and 156, the undersides of which lie in a common plane which is in the plane of the portion 158 of the flange 156. The metal of the clip is bowed or formed outwardly from the flanges 156 and 154 as at 160, see Figure 7, and a keyhole 162 is formed in this bowed or lateral portion 160. The wider portion 164 of the keyhole is preferably at the bottom of the slot. The end of this round portion 164 is preferably embossed as at 166 not only to lend strength to the clip at the keyhole

but also to provide a stop when it is desired to remove the clip from the stud. If this little projection or stop 166 were not there, the end of the round portion of the keyhole slot would project under the shoulder of the head 130 and would lock itself under this shoulder. However with the embossment 166 present, as shown particularly in Figure 8, the shoulder strikes the embossment and therefore prevents the edge of the round portion 164 from locking under this shoulder. In other words, the metal at the base of the hole 166 is struck up at the embossment and therefore cannot underride the shoulder on that part of the stud and therefore it will permit the clip to come freely away from the stud. In addition, the sides of the front portion of the keyhole slot, just where the narrower portion 162 joins the wider portion 164 are provided with the two, or opposed, indentations 163 and 165. These indentations are provided to lead the clip or cam behind the shoulder of the stud. These relieved corner portions 163 and 165 of the upper edges or the parallel sides of the narrower portion 162 of the keyhole slot of the clip will enable the clip to ease in behind the shoulder of the studs and not to catch on the sharp edge. Hence these indentations lead the studs into the narrower upper walls of the slot as the clip is pushed down from a position such that the shank 124, see Figure 4, moves from the larger hole 164 of the clip into the relatively narrower neck portion 162 of the clip. In addition, the bowed portion of the clip at the end opposite the embossed portion 166 is embossed upwardly as at 168 and 170, see Figure 9, to provide rigidity and to provide a downwardly sloping cam face 172 terminating in a lip 174. The sides of this face 172 are bent substantially at right angles to provide underneath parallel cam edges 176 which are curved as shown clearly in Figure 8 to provide a progressive wedging action. The high point of this progressive curve is adjacent the outermost edge 174 of this projection 172.

After the four studs have been placed in the appropriate holes in the four corner posts or uprights, the shelf is placed in position between the four posts and the vertical side flanges carrying the double thickness portion such as 84, see Figures 6, 8, and 10, are inserted over the toes 174 of the vertically placed clips and between the progressively wedging surfaces 176 and the web 14 of the uprights. The top corners of the shelf are then forced down by placing a board on the corner and striking with a mallet or pushing down forcibly in any other manner whereby to force or wedge the thickened corners past the cam-like surfaces 176 of the clips whereby the shelf is now rigidly held at its four corners and the shelf in turn assists in rigidifying the four corner posts.

As shown in Figure 5, two of such shelves 32 or two tops 30 may be held side by side in position with respect to a common web portion 14 of a pair of upright posts by inserting the round portion 124 of the stud into the hole 20 of the upright and thence placing the thickened end flanges of the two shelves 32 between the webs 14 and the tongues 172 of the clips, and then by moving the shelves 32 downwardly, the clips will have their smaller openings 162 surrounding the neck portions 128 and 132 of the studs, the curved wedge-like tongues 176 of the clips grippingly engaging the reinforced thickened flanges 84 and 82 of the top or of a shelf, whereby simultaneously to lock two of the clips and the two shelves to a common upright by means of one combination stud and two clips.

By reference to Figure 7 it will be noted that the head portion 16 of a web portion 14 has an arcuate corner or junction 179 which receives the ends of the flanges 156 and 154.

By means of the foregoing action the shelves are wedgingly and demountably held to the uprights in any adjustably disposed position, depending upon into which holes the studs are placed, thereafter the studs in combination with the clamps and the flanges of the shelves, or the top, hold such shelves or top firmly and rigidly in position with respect to the shelving.

It is also desirable to support the rear longitudinal edges of the shelves intermediate the ends of the shelves. Where the rear face of the back member 38 is accessible this is accomplished by means of a screw 111, see Figure 15. However when the rear face of the back wall 38 is not accessible then it is desirable to support the rear wall of the shelf by means of the rear shelf clip, or shelf-to-back clip shown at 180 in Figure 14. This clip can be inserted from the front of the shelving.

This clip 180 has stamped as at 182 a rearwardly outwardly and downwardly extending tongue 184 and also an upper tongue 188 which is narrowed to provide a backwardly bent neck 186 and a substantially larger fan-shaped head 188 bent rearwardly of the plane of the portion 180. At the bottom the clip 180 is bent forwardly and upwardly as at 190 to provide a tongue 192 which preferably at its tip as at 194 has a slight bend. As shown in Figure 13, by inserting, from the front of the shelving, the fan-shaped head 188 through the elongated slot 40, see Figure 12, with the head projecting therethrough and lying flat against the rear wall of the back 38 and with the front wall of the clip 180 lying flat against the front wall of the plate 38, said wall will depend downwardly beneath the flange 80 of the depending skirt, will pass therearound whereby to form a cradle to receive the inwardly bent flange 80 of the rear depending skirt of the shelf 32.

In addition to the foregoing, a plurality of partition plates or dividers 200, flanged at top and bottom, are disposed between the top and the next adjacent shelf or bottom to adjacent shelves for subdividing the space between shelves. These dividing plates have, as before noted, upper and lower flanges which extend outwardly at right angles and are provided with holes to register with the holes 186 formed in the top. The construction of the means for holding these dividers in posision forms the subject matter of a separate application.

In instances where open-ended shelving is utilized and where relatively heavy objects are going to be supported on the shelves, it is desirable to support the shelving in such a manner that the load will be carried directly by the uprights themselves. To this end there is provided the cross brace and shelf end support shown in Figures 17, 18, 19 and 20. This comprises a vertically disposed sheet metal strap 202 which extends from a point flush with the upper edge of the depending flange 70 of the top of the shelving to a point 204 which is short of the floor. This strap 202 extends parallel with the corner posts 2 and 4 and lies vertically intermediate these corner posts. The strap is provided with a vertical series of spaced holes 206. The top

portion of the strap is secured by a self-tapping screw or by a bolt 208 that passes through a hole 210 in the vertical end flange 70 of the top. The bolt is secured by a nut 212. In addition there is provided a rectangular sheet metal plate 214 having the four holes 216 and 218 at its corners whereby four relatively shorter and narrower straps 220, 222, 224 and 226 are riveted as at 228, 230, 232 and 234. Each one of these straps at its outer end is laterally offset as at 236 and 238 and the ends of such offset portions are apertured to receive self-tapping screws or bolts 240 and 242 which engage any one of the holes 20 in the uprights 2, 4 and 6. By means of this construction it will be seen that the vertical band does not touch the floor, the four short straps 220 to 226 are riveted to the center plate and the vertical band is bolted to the center plate as at 244. The ends of the four short straps extending from the center plate are bolted to the upright T posts, the two uppermost straps being bolted to the uppermost parts of the T posts as near the tops of the T posts as possible and then when the two lower bands are also bolted to the upright T's, the unit then acts as a cross brace as well as a unit on which the vertical band hangs. Finally, when the shelf ends are bolted to the vertical band 202 as at 244, and the shelves are loaded with material, this load is supported because the vertical band and the two upper bands are put under tension whereby the load is finally supported on the upright corner posts or T's 2, 4, 6 and 8. This end brace is used only in open type shelving. When closed or bin type shelving is desired a metal sheet filling the space between the T's is used instead.

Obviously the invention is not limited to the specific details of construction disclosed herein but is capable of other modifications and changes without departing from the spirit and scope of the appended claims.

Having thus described our invention, what we claim as new and desire to secure by Letters Patent is:

1. A clip for fastening a shelf to a vertical upright, said clip comprising an elongated, relatively narrow body portion having spaced apart, marginally extending, longitudinally disposed, parallel surfaces lying substantially and wholly in a common plane and adapted to contact a surface to which the clip is to be fastened, the body of the clip between said parallel surfaces being disposed laterally of the plane of said parallel portions and having an opening to receive a fastening stud, said laterally disposed body portion only including a tongue projecting outwardly longitudinally of said body portion beyond the ends of said parallel disposed portions and also laterally of the body that is disposed between said parallel portions, the tongue providing side wall portions disposed substantially at right angles to the plane of said central body portion and having spaced curved cam-shaped edges projecting generally at right angles to the plane of said two spaced parallel surfaces of said body, said two edge cam-shaped portions constituting clamping surfaces for clamping an object against the side wall which carries said stud.

2. A clip comprising an elongated body formed of relatively heavy gauge sheet metal stock suitably formed to provide spaced, parallel, longitudinally disposed, coplanar marginal clamping portions that are relatively narrow in a direction transversely of the longitudinal axis of the clip, said clamping portions extending from one end of the body toward the other but terminating substantially short of said other end of the body, the body of the clip intermediate the clamping portions being provided with an aperture to receive a stud, said intermediate body extending beyond the terminal ends of the clamping portions, said intermediate body extension being of less transverse width than the remainder of said body by the transverse width of said parallel marginal clamping portions and being somewhat cupped to provide two spaced apart wedge-shaped free edges that are disposed substantially transversely to the common plane of said clamping portions.

3. A clip comprising an elongated body formed of relatively heavy gauge sheet metal stock suitably formed to provide spaced, parallel, longitudinally disposed, substantially marginal clamping portions lying in a common plane, said clamping portions extending only a portion of the length of the body and providing free ends, the body of the clip between said clamping portions being disposed laterally of the common plane of said marginal portions and being formed to receive a stud, one end of the laterally disposed intermediate body of the clip beyond the terminal or free ends of said marginal clamping portions, projecting substantially beyond said adjacent free ends of the marginal clamping portions and fashioned to provide two spaced apart edges that are disposed substantially transversely to the common plane of said marginal portions, said edges lying to one side of the common plane of said marginal portions and being of general wedge shape.

4. A clip comprising an elongated body formed of relatively heavy gauge sheet metal stock suitably formed to provide spaced, parallel, longitudinally disposed, marginal clamping portions that are relatively narrow in a direction transversely to the longitudinal axis of the clip and lying in a common plane throughout their length, said clamping portions terminating short of one end of the body of said clip to provide free ends thereat, the body of the clip between said marginal clamping portions being disposed laterally of the common plane of said marginal portions and being provided with an aperture to receive a stud, one end of the laterally disposed intermediate body projecting substantially beyond said free ends of the marginal portions and fashioned to provide two spaced apart edges that are disposed substantially transversely to the common plane of said marginal portions, said two edges being disposed laterally offset of the plane of said marginal portions and approaching closest to the plane of said clamping portions substantially short of the outer ends of said edges, the outer portion of said edges sloping from said last mentioned portion outwardly away from the common plane of said clamping portions to the end of said edges.

5. A clip comprising relatively heavy gauge sheet metal bent to provide a pair of spaced apart, parallel, marginal, relatively narrow clamping tracks having free ends substantially intermediate the length of the clip, the body of the clip intermediate said clamping tracks being bent laterally out of the common plane of said clamping tracks and provided with an aperture for receiving a fastening stud, said intermediate body portion projecting beyond the free ends of said clamping tracks and such projection being embossed laterally beyond the plane of said perforated portion of said body to provide a curved,

rigidified tongue having free edges forming wedging portions extending transversely of the spaced clamping tracks, said wedge portions at the outermost end of the tongue curving in a direction away from said clamping tracks to provide an intermediate clamping jaw adapted to wedge an article to be clamped between said body and a flat surface.

6. A clip of sheet metal of relatively heavy gauge, comprising a pair of spaced apart, marginal, parallel and longitudinally disposed clamping tracks, said clamping tracks lying in a common plane, said clip intermediate said clamping tracks having an end portion bent laterally out of the plane of the clamping tracks, said intermediate body portion having an opening to receive a stud, the intermediate body portion of the clip beyond the ends of said clamping tracks being embossed still further outwardly of the plane of said intermediate body portion, the outer free edges of said end portion being bent substantially at right angles and substantially transversely of the common plane of said clamping tracks to provide clamping jaws, said clamping jaws having cam-shaped surfaces to provide a wedging action, said clip possessing some resiliency due to its bent portion.

7. A relatively heavy gauge sheet metal clip comprising parallel, spaced apart, elongated, relatively narrow clamping tracks, the clip intermediate of said tracks being bent outwardly of the common plane of said tracks and perforated to provide a keyhole slot disposed parallel to said tracks, the metal at the edge portions of said keyhole slot being embossed to provide rigidity, said intermediate body portion beyond said keyhole slot being embossed outwardly in a direction away from the common plane of said track sections to provide a tongue, the edge portions of said tongue being bent substantially transversely to provide jaws lying generally parallel to the clamping tracks, the edges being generally wedge-shaped and disposed laterally of the plane of said clamping tracks, the upper surface of said embossed body inclining downwardly in a direction toward the plane of said clamping tracks.

8. A stud for fastening shelving to uprights comprising a cylindrical body portion having a relatively narrower circular neck adjoining the same at one end, said neck terminating in a cap of larger diameter than the neck portion and at least of the same diameter as said cylindrical body portion, the opposite end of the cylindrical portion having an adjacent cylindrical portion of enlarged diameter which last mentioned cylindrical portion at its opposite outer end integrally connects with an outwardly projecting second neck of diameter substantially equal to the diameter of the first neck, said second neck terminating in a cap of larger diameter than said second neck and substantially of the same diameter as the first mentioned cap.

9. A back support for a shelf comprising a sheet metal member having a generally flat body portion one part of which is bent in substantial V-shaped formation outwardly of said body portion to provide a support for a shelf, the central portion of said body portion being slotted and bent outwardly of the plane of said flat body portion to provide an outstanding tongue, the inner portion of which tongue is generally parallel with the plane of said body portion, the outer end of said body portion being provided with a narrow tongue bent out of the plane of the body portion and in the same direction as said first mentioned outstanding tongue, the outer end of said tongue lying generally parallel to the plane of said body portion, said last mentioned tongue having a head of greater width than the remaining portion of the tongue.

10. A shelf clip comprising an elongated sheet metal body portion having one portion bent at an acute angle to the main plane of the body portion to provide a shelf support, the tip of said bent portion being bent again in a direction generally parallel to the main body portion, the central portion of said main body portion being provided with an integral tongue bent out of the plane of the main body portion in a direction away from said one portion and having an inner portion lying generally parallel to the main body portion but spaced therefrom, the opposite end of said main body portion being tapered gradually to provide a neck portion, said neck portion being bent outwardly of the plane of the body portion in the direction of said tongue, and the end of said neck portion extending outwardly to provide a head of greater width than the width of the tongue.

11. A shelf comprised of sheet metal having marginal flanges depending at right angles from the surface of the shelf, said flanges including marginal portions bent inwardly to underlie the undersurface of the shelf, and a rigidifying, relatively flat band lying flush against the inner wall of one of the flanges, the lower edge of said band lying against the lower junction of said flange wall and its bent flange, the upper edge of said band underlying the inner face of said top, and dimples formed in the metal of the top of the shelf downwardly just beyond the outer walls of said bands and so extending in spaced relation along the top whereby to hold said bands in position.

12. A shelving structure comprising spaced uprights having flat webs having vertically spaced holes in said webs, studs passing through certain of said holes in said webs and having projecting heads, clips having holes engaging said studs, a sheet metal shelf having a top and marginal depending skirts, certain of said skirts having inward extensions, a rigidifying member including a band disposed with its face parallel to and in contact with the inner wall of said skirt, its upper edge underlying said top and its bottom edge engaging said inward extension, the ends of said band having openings, and dimples on said skirt projecting through said openings and contacting the side wall of a clip to space said skirt from the side wall of the clip a distance equal to the thickness of the band.

13. Shelving comprising T-shaped uprights spaced apart in rectangular formation and each having a leg portion, the leg portions of the uprights having a vertical series of spaced holes, studs in the holes and clips engaging the studs, said clips having wedge-shaped clamping parts confronting the legs of the uprights, a sheet metal shelf having marginal depending skirts clamped between the uprights and the clamping parts of the clips, a rigidifying member including a flat band mounted on the inner wall of the shelf skirt, said skirt having an integral dimple extending inwardly toward the clamping part of the clip a distance greater than the thickness of the band, said band having an opening through which said dimple projects.

14. In combination with shelving having uprights and a sheet metal back carried thereby, said back having vertical series of elongated,

spaced apart perforations, a shelf supported by said uprights, said shelf having depending flanges and a clip for supporting the back of said shelf comprising a clip of relatively flat, elongated sheet metal having a bottom portion bent obliquely outwardly in substantially V-shaped formation to underlie the rear flange of said shelf, the central body portion of said clip having an integral tongue extending rearwardly and bent outwardly rearwardly of the plane of said body portion and having a portion lying parallel thereto and adapted to enter one of said elongated holes of said back from the front of said shelving, the upper portion of said clip including a narrowed neck portion bent rearwardly out of the plane of said body portion and passing through another one of said spaced apart elongated apertures in said back, said narrow neck being bent substantially at right angles out of the plane of the body portion of the clip and being wider at the top than at the neck portion, the lengths of said neck portion of said head and said tongue permitting each clip to be turned to remove it from said apertures, said head and said tongue when in shelf supporting position functioning normally to prevent the inadvertent falling out of said clip from said apertures.

15. Shelving comprising four spaced apart uprights of T-shaped cross section, said T's being arranged with certain flanges of the T's parallel and with the certain of the legs of the T's parallel and in spaced apart relation, shelving having depending vertical flanges at its sides, front and back, a back disposed within and between the adjacent confronting parallel marginal flanges of the rear T corner posts and within and between the marginal flanges at the sides and back of the shelving, clamping the vertical edges of the back against said flange of the T-shaped member, the parallel web portions of the T-shaped members having vertically disposed spaced apertures, studs passing through the apertures and clips having apertures through which a portion of the stud passes, each of said studs having a head portion engaging a web and each of said clips having a keyhole slot, each of said studs having a neck portion passing through said keyhole slot of the clip, said stud having a head adjacent said neck portion projecting beyond the keyhole in the clip and being larger than the narrower portion of said keyhole and smaller than the larger portion of said keyhole whereby to permit said clip to be detached from said stud, said clip having lower spaced apart clamping tracks adapted to contact the face of a web and having a wedge-shaped clamping surface at its upper portion adapted to receive one of the flanges between it and said webbing whereby grippingly to hold the flange of the shelving securely to said webbing.

16. Shelving comprising four corner posts each of T-shaped formation with pairs of posts having central webs of the T's of the posts lying in common planes and parallel, a top and a shelf each having vertically depending skirts or flanges formed integrally with the top and with the shelf respectively, the web portions of the corner posts being perforated to provide vertical series of spaced apart perforations, identical clips, one at each corner of the top and shelf respectively, studs having portions adapted to enter the apertures of said clips, said clips being apertured to receive said studs, each clip comprising parallel elongated tracks disposed in a common plane and positioned in contact with one face of the web so as to be clamped by said stud firmly against said web in vertical position thereon, and each clip having a central body portion bent out of the common plane of said tracks, said body portion having a keyhole type of stud aperture therein and the body portion at one end and beyond said tracks being bent out of the plane of the track, the marginal edges of said outwardly bent end portion being disposed transversely to the plane of the track to provide clamping jaws of cam-like construction adapted to clamp the skirt portion of the tops and the shelf against the web portions of said uprights at the corner, the end of the narrower portion of the keyhole apertures in the clips being dimensioned relatively to the height of the shelf flanges to be engaged by each clip so as to space the lower edge of such flange above said clip supporting stud when the shelf is in supported position so as to cause the shelf to be retained by the lateral wedging pressure of the cam-like surfaces of the clips.

17. Shelving comprising an upright having a flat web provided with longitudinally spaced holes, a shelf having a depending flange for contacting a first face of the web of the upright, a stud having a cylindrical portion passing through the aperture of the web and a head of greater diameter than the aperture of the web to engage the opposite face of the web, said stud having at its opposite end an integral neck of lesser diameter than the cylindrical portion, said neck terminating in a second head of greater diameter than the neck but of smaller diameter than one of the web holes, and a sheet metal clip having a pair of elongated, relatively narrow, parallel marginal tracks disposed in a common plane and engaging the first face of the web, the body portion of the clip intermediate said tracks being bent out of the plane of said common plane, said intermediate body portion having a keyhole type slot, the larger portion of said hole being of size to have the second stud head pass therethrough, and the smaller portion of said keyhole being narrower than the second head of the stud but of sufficient size to permit the passage of the neck of the stud therethrough, whereby to permit lateral movement between the clip and the stud, the body portion of the clip beyond said tracks being bent outwardly away from the common plane of the tracks to provide a tongue, the marginal edges of said tongue being bent transversely of the body portion of the tongue to provide clamping jaws extending longitudinally and parallel of the clamping tracks and disposed to one side of the clamping tracks, said longitudinally extending clamping jaws being of somewhat wedge shape and engaging the inner wall of the depending skirt of a shelf and clamp the same to said web, the end of the narrower portion of the slot in the clip being dimensioned relatively to the height of the flange of the shelf engaged by the clip so as to space the lower edge of such flange above the stud supporting said clip when the shelf is in supported position so as to cause the shelf to be retained by the lateral wedging action of the cam faces of said clips.

18. Shelving comprising an upright having a flat web provided with longitudinally spaced holes, a shelf having a depending flange for contacting the one face of the web of the upright, a stud having a cylindrical portion passing through the aperture of the web and a first head of greater diameter than the aperture of the web to clamp against the opposite face of the web, said stud

having at its opposite end an integral neck of lesser diameter than the cylindrical portion, said neck terminating in a second head of greater diameter than the neck, and a sheet metal clip having a pair of elongated, relatively narrow, parallel marginal tracks disposed in a common plane and contacting the first mentioned face of the web, the body portion of the clip intermediate said tracks being bent out of the plane of said common plane, said intermediate body portion having a stud keyhole, the larger portion of said keyhole being bottommost and of size to have said second head pass therethrough, and the smaller portion of said keyhole being narrower than said second head of the stud but of sufficient size to permit the passage of the neck of the stud therethrough, whereby there is lateral movement between the clip and the stud, the body portion of the clip beyond said tracks being bent outwardly away from the common plane of the tracks to provide a tongue, the marginal edges of said tongue being bent transversely of the body portion of the tongue to provide clamping jaws extending longitudinally and parallel to the clamping tracks and disposed to one side of the clamping tracks, said longitudinally extending clamping jaws being of somewhat wedge shape and being adapted to engage the inner wall of the depending skirt of a shelf and clamp the same on relative movement between said shelf, said clip and said stud, against the first-mentioned face of the web, the end of the narrower portion of the slot in the clip being dimensioned relatively to the height of the flange of the shelf engaged by the clip so as to space the lower edge of such flange above the stud supporting said clip when the shelf is in supported position so as to cause the shelf to be retained by the lateral wedging action of the cam faces of said clips.

19. Shelving comprising an upright having a web provided with a longitudinal series of spaced apart perforations, a shelf or top having a depending skirt to be clamped against one face of the web of the upright and a detachable stud, the stud having means for entering one of the apertures of said uprights and a head for clamping against the opposite face of the web, and said stud having a narrower neck projecting beyond said means of said stud, and an adjoining head of greater dimensions than the neck but less dimensions than the hole in the web, said clip being elongated and having a keyhole slot, the larger portion of which is adapted to receive the last mentioned head of the stud and the narrower portion of which is adapted snugly to receive the narrower neck of the stud whereby there is relative locking and clamping movement between the clip and the stud to clamp the clip to the one face of the web, said clip having a laterally disposed portion providing a wedge-shaped clamping jaw adapted to engage the wall of a skirt of the shelf and adapted upon relative movement between the shelf, the clip and the stud for wedgingly clamping the shelving against said surface of the web, the end of the narrower portion of the keyhole slot in the clip being dimensioned relatively to the height of the shelf or top flange engaged by the clip so as to space the lower edge of such flange above the stud supporting said clip when the shelf is in supported position so as to cause the shelf to be retained by the lateral wedging action of the clamping jaw of said clip.

20. In commercial shelving, in combination with at least six uprights spaced apart in pairs providing a rectangular upstanding framework, each of said uprights being of T-cross section and arranged so that the legs of the T's confront each other and are in common planes in pairs, each of the leg portions of the T's being provided with a vertical series of spaced apart openings, a series of pairs of studs insertable in pairs of openings which register in a common horizontal plane, certain of the studs being insertable in the holes of the leg portions of the central pair of the three pairs of uprights, each of said certain studs comprising a cylindrical portion adapted slidably to fit in the openings in the leg portions of the T's, one end of the cylindrical portion having an enlarged head thereon disposed laterally of said opening and adapted to contact one face of the leg and having an outstanding neck of smaller dimentions than the cylindrical portions, said neck terminating in a head of a diameter larger than the neck portion but smaller than the first mentioned head, the opposite end of the cylindrical portion having extending therefrom on the opposite side of said leg portions of said T's a neck of smaller diameter than the cylindrical portion terminating in a head of larger diameter than the neck portion and of substantially the same diameter as the cylindrical portion, shelves supported by and between said uprights and having depending skirts lying against said one face of said vertical legs of the T's, and clamping clips disposed in pairs on opposite sides of the leg of a T of the central pair of uprights and embracing a common stud thereon, each clip being provided with a keyhole slot and a clamping jaw, the keyhole slot having an enlarged portion adapted to pass over the terminal head of the same stud and the narrower portion of the keyhole slot being adapted to embrace the smaller neck portions of the stud, said clamping jaws of the clips upon said single stud clamping against opposite faces of said legs and each of said clips having a spaced wedge-shaped portion each of which clamps against a depending skirt of adjacent shelves to hold them against the opposite faces of the leg portions of the uprights, said studs in the supported position of the shelves being spaced below the lower edges of the depending flange of the shelf so supported whereby to cause each supported shelf to be retained by the lateral wedging action of the clips forcing the flange walls laterally against the vertical web of the uprights.

21. Knockdown shelving comprising angle iron uprights disposed in spaced rectangular formation, and sheet metal shelves, said shelves having depending marginal skirts contacting opposite faces of an upright, said uprights having holes spaced vertically thereof, detachable studs inserted in the holes and having clip engaging projections extending beyond the holes, separate clips having elongated keyhole type slots through which said stud projections extend, said clips lockingly engaging said studs, each clip having a clamping surface extending parallel to and coextensive with said elongated slots, said surfaces contacting one face of said uprights, and said clips having wedge-like clamping portions disposed in spaced relation from said first mentioned clamping surfaces and disposed laterally out of the plane of said first mentioned clamping surfaces and spaced from the adjacent faces of said uprights, said shelves being assembled to said uprights so that portions of the depending skirts thereof project downwardly between said second

mentioned clip clamping portions and said uprights whereby as said shelves are forced downwardly between said clamping surfaces and said uprights, said shelves are clamped solely against a vertical wall of said uprights and rigidly assembled thereto and whereby said uprights are rigidified.

22. A clip adapted to interlock with a stud having a shoulder and carried by an upright having a flat surface, said clip having a clamping surface to engage an upright and having a cam-shaped wedging surface spaced from said clamping surface and disposed laterally of the clip out of the plane of said clamping surface for engaging a skirt flange, said clip also having a keyhole slot including parallel spaced walls, said clip having a wedge-shaped clamping portion, the parallel walls of the narrower portion of the keyhole slot adjacent the junction of said narrower portion with the enlarged portion of the slot having opposed depressed portions for guiding the slotted walls of the clip beneath the shoulder of the stud.

23. A clip adapted to interlock with a stud having a shoulder and having a shank passing through a hole in an upright, said clip having a wedge-shaped clamping portion and a keyhole type slot spaced therefrom, said slot having a large opening merging into parallel spaced walls of the narrow slot of the keyhole slot, the central portion of the curved outer wall of the enlarged part of the keyhole slot being upstanding of the face of that portion of the body of the clip in which the keyhole is formed whereby to prevent the shoulder of the stud overlying and locking with said underwall of the larger part of the keyhole.

24. Shelving comprising four angle iron uprights rectangularly spaced, a top, and shelves having depending skirts, said uprights having holes vertically spaced therealong, shouldered studs projecting into said holes, clips having openings through which said shoulders of said studs project, each of said clips having a wedging surface opposed in spaced relation to said uprights between which surfaces and said uprights portions of the skirts of said top and shelves are received rigidly to mount said top and shelves on and to said uprights, and each of said clips having a clamping surface disposed in spaced relation from said wedging surface and adapted to flatly engage and clamp against the adjacent side wall of an upright, and end bracing means for said shelving comprising a vertically disposed, elongated strap arranged intermediate the vertical end uprights, said strap having vertically spaced holes, a brace plate vertically secured in a hole of said strap, the plane of the plate lying parallel to and adjacent the plane of the strap, and four additional straps shorter than said first mentioned strap connected to the upper and lower portions of said brace plate, the upper straps being connected to the uprights adjacent the top thereof and the lower straps being connected to spaced lower portions of the uprights that are disposed well below the level of said brace plate.

25. Shelving comprising four angle iron uprights rectangularly spaced, a top, and shelves having depending skirts, said uprights having holes vertically and uniformly spaced therealong, shouldered studs projecting into certain of said holes, clips having openings through which said shoulders of said studs project, said clips having clamping surfaces each contactingly clamping against the side of an upright and each having wedging surfaces disposed in spaced relation from said first mentioned clamping surfaces and opposed to said uprights between which last mentioned wedging surfaces and said uprights portions of the skirts of said shelves are received whereby rigidly and detachably to clamp said shelves on and to said uprights, and end bracing means for said shelving comprising a vertical elongated brace connected to the top intermediate said uprights, said vertical brace having spaced holes therealong, and diagonally disposed bracing arms connecting to certain of said uniformly spaced holes in the upper portions of said uprights with portions of said arms disposed well below the top of said uprights, and additional diagonal bracing arms connected to lower portions of said vertical brace and to lower of the uniformly spaced holes of said uprights whereby when said shelves are loaded said vertical strap and two upper bracing arms are put under tension and fastening means passing through the skirts of said shelves and through registering holes in said vertically elongated braces.

26. Shelving comprising four angle iron uprights rectangularly spaced, a top, and shelves having depending skirts, said uprights having holes uniformly and vertically spaced therealong, fastening means projecting into certain of said holes, clips having openings through which said fastening means project, said clips having relatively flat clamping surfaces adapted to clamp tightly against the side of an upright and having spaced from said first mentioned clamping surfaces wedging surfaces disposed laterally out of the plane of said clamping surfaces so as to stand outwardly from the adjacent face of an upright and opposed to said uprights between which surfaces and said uprights portions of the skirts of said top and shelves are received rigidly to clamp said shelves on and to said uprights, end bracing means for said shelving comprising an elongated strap disposed vertically intermediate said uprights and parallel thereto, said vertically elongated strap having vertically spaced holes, a rectangular brace plate fixed to said strap at a location removed from the top thereof, a pair of oppositely and upwardly disposed arms interconnecting the upper corners of said plate with certain of said uniformly spaced holes of said uprights adjacent the top thereof, and a second pair of oppositely and downwardly disposed arms interconnecting the lower corners of said plate with certain of said uniformly spaced holes of said uprights, said vertical, elongated strap at its top being connected to the top and holes in said strap registering with shelves being connected to said registering shelves whereby when the shelves are loaded said strap and upper arms will be tensioned by said load.

27. A clip having spaced clamping surfaces and having a keyhole slot adapted to receive a stud, said keyhole slot comprising spaced parallel walls terminating at one end in a substantially circular hole of larger diameter than the width of the slot, the central portion only of the end of the circular wall of the substantially circular hole opposite substantially the central axis of the narrow slot being upstanding from the rim of the wall forming the slot to constitute a stop for the stud.

28. A clip having a body formed with clamping surface and formed with a cam-like wedging surface spaced from said clamping surface, said body having an aperture to receive a shank formed

with a shoulder, said aperture comprising an elongated slot formed by spaced parallel walls, said slot terminating at one end and merging into a substantially circular hole of larger diameter than the width of said slot, a marginal wall of said hole having an outstanding stop disposed to prevent the shoulder of a stud inserted through the hole overlying and locking with the under wall of the larger part of the keyhole.

29. A sheet metal clip adapted to interlock with a stud having a cylindrical shank formed with a shoulder and a head of greater diameter than the shank, said clip having its sheet metal body portion provided with clamping portions and with spaced wedging portions, and said body portion including a keyhole type slot disposed between said clamping portions and having a narrower elongated slot provided with parallel walls which at one end of said slot terminate in a circular opening of greater diameter than the width of said slot, opposed portions of the outer opposed edges of the parallel walls of the elongated slot at the junction of one of the facial walls of said clip and the circular opening of greater diameter being depressed or relieved to guide the slotted walls of the clip beneath the shoulder of the stud as the clip is moved relatively to the stud forming position wherein the shank of the stud lies in the circular end opening to a position wherein the shank of the stud lies in the narrower slot of said clip.

30. A clip and stud assembly, said clip being formed of sheet metal and having an elongated body portion provided with spaced parallel, elongated clamping surfaces lying in a common plane, said body between said clamping surfaces being disposed laterally out of the plane of said clamping surfaces and said body extending between said surfaces beyond said surfaces and formed with a tongue of wedge-shaped formation, said intermediate body portion of said clip between said clamping surfaces having an aperture therein, a stud comprising a cylindrical portion one end of which portion terminates in a second cylindrical portion which is of less length but greater diameter than said first mentioned cylindrical portion, said second cylindrical portion having an integral neck passing through the aperture of the clip, means permanently fastening said neck portion and clip in assembled relation whereby said stud is carried by and extends laterally normal to said clip, the opposite end of said first mentioned cylindrical portion of said stud having a neck of lesser diameter than said first mentioned cylindrical portion, said neck having an integral head of greater diameter than said neck and of lesser diameter than said second mentioned cylindrical portion.

31. In a shelving structure, the combination of an upright having a vertical series of spaced holes therein, a shelf having a depending marginal flange, an elongated clip vertically disposed with respect to said upright, said clip having an upper wedging portion to clamp said flange laterally against a substantially vertical wall of said upright and also having a lower end arranged to press against said substantially vertical wall of said upright, said clip having a keyhole slot therein substantially between its ends, and a removable stud horizontally disposed in one of said vertical series of holes in said upright and releasably engaged in said slot to allow the clip to be shifted vertically with respect to the stud to engage the narrow portion of said keyhole slot and cause the wedging portion of the clip

to clamp the shelf flange to the upright, the upper wedging portion of the clip being disposed sufficiently spaced from the narrower end of the keyhole slot with relation to the height of the shelf flange so that in the clamped position of said shelf the bottom of said shelf flange is spaced from said stud whereby said shelf is retained by lateral clamping action between said clamp and the shelf flanges and said uprights.

32. A stud for use in securing together perforated members of assembled shelving, said stud comprising a cylindrical body portion of substantial length in a direction longitudinally of the long axis of the stud, said cylindrical body portion at one end being formed with a cylindrical neck of lesser diameter than said cylindrical body portion, said neck terminating in an end cylindrical cap of greater cross sectional diameter than the neck, said cylindrical body portion at its other end being joined by a neck of lesser diameter than said body portion, said second-mentioned neck terminating in an enlarged cap of a greater diameter than said second mentioned neck, all portions of said stud being formed of solid metal throughout whereby the opposed ends of said stud may provide rigid unyielding abutments for maintaining a clamping engagement with respect to opposed spaced metal members with which the same contact.

33. A clip of relatively heavy gauge sheet metal fashioned to provide parallel, spaced apart, longitudinally disposed clamping tracks lying in a common plane and an intermediate portion bent laterally out of the common plane of said tracks and provided separately with an opening to receive a stud, one end of the intermediate body portion being shaped outwardly away from the common plane of said clamping tracks and providing free edges forming wedging means disposed substantially normally of said common plane, said wedging means at its outer extremity extending outwardly away from the plane of the clamping tracks.

JAMES E. BALES.
MATT MONACO.

REFERENCES CITED

The following references are of record in the file of this patent:

UNITED STATES PATENTS

Number	Name	Date
408,001	Dunn	July 30, 1889
418,688	Converse	Jan. 7, 1890
524,405	Schwarz	Aug. 14, 1894
559,924	Arnold	May 12, 1896
727,913	Dixon	May 12, 1903
735,618	Tannewitz	Aug. 4, 1903
836,045	Melchior	Nov. 13, 1906
845,121	Reniff	Feb. 26, 1907
868,473	Palmer	Oct. 15, 1907
988,558	England	Apr. 4, 1911
1,056,486	Bales	Mar. 18, 1913
1,140,940	Bales	May 25, 1915
1,233,243	Jensen	July 10, 1917
1,235,679	Gerberich	Aug. 7, 1917
1,375,869	Vance	Apr. 26, 1921
1,452,777	Band	Apr. 24, 1923
1,554,011	Lehman	Sept. 15, 1925
1,660,898	Worley, Jr.	Feb. 28, 1928
1,849,604	Weatherhead, Jr.	Mar. 15, 1932
1,853,840	Bailey	Apr. 12, 1932
1,863,625	Fenstermaker	June 21, 1932

(Other references on following page)

UNITED STATES PATENTS

Number	Name	Date
1,871,972	Fenstermaker	Aug. 16, 1932
1,880,179	Onions	Sept. 27, 1932
1,900,601	Felder	Mar. 7, 1933
1,937,935	Zimmerman	Dec. 5, 1933
1,963,427	Tyler	June 19, 1934
1,968,557	Johanson	July 31, 1934
1,990,756	Saaf	Feb. 12, 1935
2,011,357	Ford	Aug. 13, 1935
2,040,374	Grimes	May 12, 1936
2,067,709	Humphrey	Jan. 12, 1937
2,084,417	Tomkinson	June 22, 1937
2,162,167	Greterman	June 13, 1939
2,189,538	Van Pelt	Feb. 6, 1940
2,235,530	Mercer	Mar. 18, 1941
2,252,194	Mills	Aug. 12, 1941
2,354,802	Doke	Aug. 1, 1944
2,386,386	Doke	Oct. 9, 1945

FOREIGN PATENTS

Number	Country	Date
354,979	Great Britain	Aug. 20, 1931
377,770	Great Britain	Aug. 4, 1932