Office de la Propriété Intellectuelle du Canada
Un organisme d'Industrie Canada

Canadian Intellectual Property Office
An agency of Industry Canada

CA 2276596 C 2005/04/12

(11)(21) 2 276 596

(12) BREVET CANADIEN
CANADIAN PATENT

(13) C

(86) Date de dépôt PCT/PCT Filing Date: 1998/02/03
(87) Date publication PCT/PCT Publication Date: 1998/08/27
(45) Date de délivrance/Issue Date: 2005/04/12
(85) Entrée phase nationale/National Entry: 1999/07/02
(86) N° demande PCT/PCT Application No.: SE 1998/000184
(87) N° publication PCT/PCT Publication No.: 1998/036837
(30) Priorité/Priority: 1997/02/25 (9700677-9) SE

(51) Cl.Int.^{6}/Int.Cl.^{6} B02C 7/12, D21D 1/30, D21B 1/14

(72) Inventeur/Inventor:
VIRVING, NILS, SE

(73) Propriétaire/Owner:
VALMET FIBERTECH AKTIEBOLAG, SE

(74) Agent: FETHERSTONHAUGH & CO.

(54) Titre : DISPOSITIF D'ALIMENTATION EN MATIERE FIBREUSE
(54) Title: FEEDING DEVICE FOR FIBROUS MATERIAL

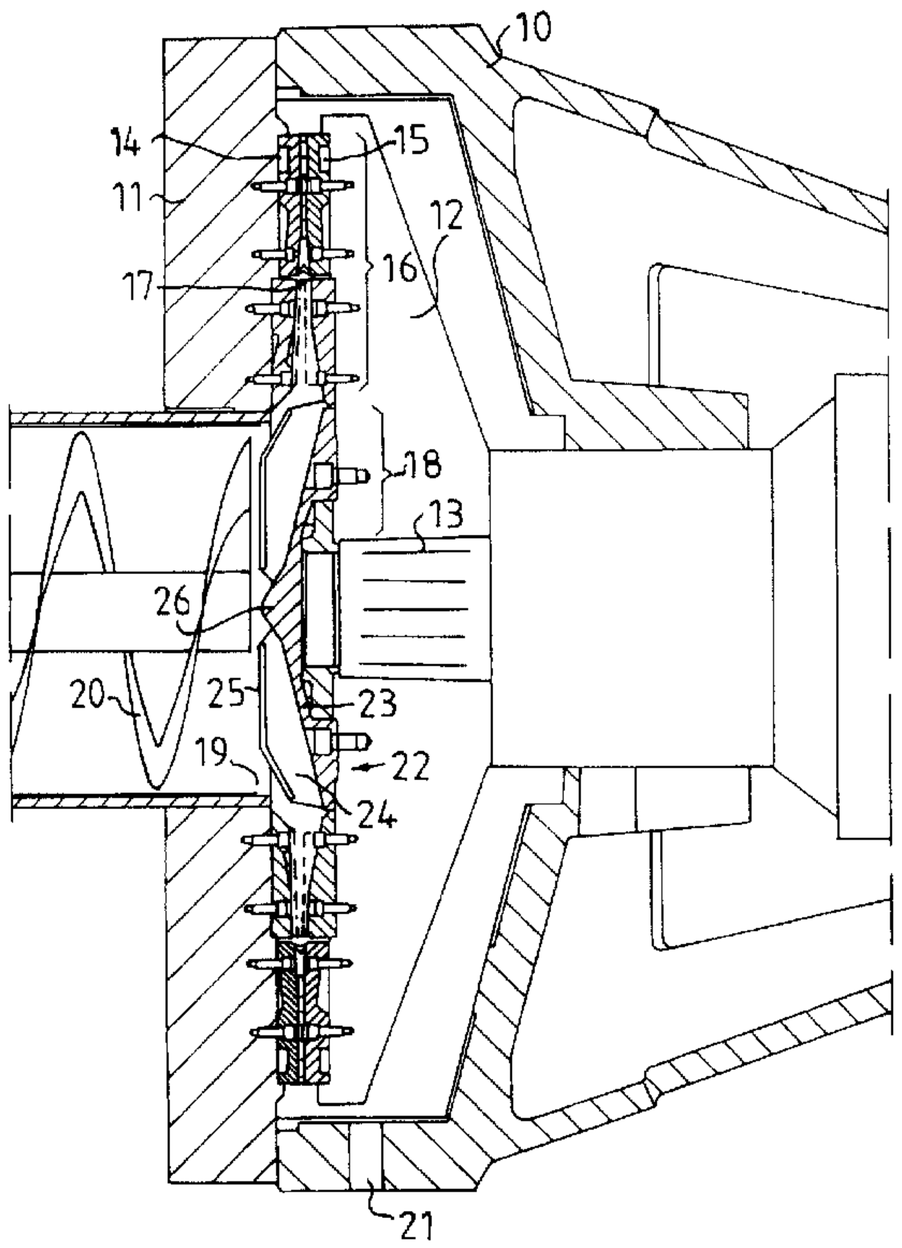

(57) Abrégé/Abstract:
A feeding device intended for refiners with two opposed refining means (11, 12), of which one is stationary and one rotary. The refining means are provided with refining elements (14, 15), which between themselves form a refining gap (17) with a refining zone (16) for working lignocellulosic fibrous material. The feeding device (22) comprises a circular disk (23) with at least one strip (24), which extends from a position close to the centre of the disk radially outward to the circumference of the disk. This strip (24) along the greater portion of its upper edge is provided with a roof (25) projecting out symmetrically on both sides of the strip. The feeding device (22) is intended to be placed centrally on the rotary refining means (12) with the strip (24) facing to a central material feed opening (19) in the stationary refining means (11).

PCT WORLD INTELLECTUAL PROPERTY ORGANIZATION .
International Bureau

INTERNATIONAL APPLICATION PUBLISHED UNDER THE PATENT COOPERATION TREATY (PCT)

(51) International Patent Classification 6 :
B02C 7/12, D21B 1/14, D21D 1/30

A1

(11) International Publication Number: **WO 98/36837**

(43) International Publication Date: 27 August 1998 (27.08.98)

(21) International Application Number: PCT/SE98/00184

(22) International Filing Date: 3 February 1998 (03.02.98)

(30) Priority Data:
9700677–9 25 February 1997 (25.02.97) SE

(71) Applicant *(for all designated States except US)*: SUNDS DEFIBRATOR INDUSTRIES AB [SE/SE]; S–851 94 Sundsvall (SE).

(72) Inventor; and
(75) Inventor/Applicant *(for US only)*: VIRVING, Nils [SE/SE]; Backtimjegränd 27, S–165 73 Hässelby (SE).

(74) Agent: SUNDQVIST, Hans; Sunds Defibrator Industries AB, Strandbergsgatan 61, S–112 51 Stockholm (SE).

(81) Designated States: AU, BR, CA, JP, NO, NZ, US, European patent (AT, BE, CH, DE, DK, ES, FI, FR, GB, GR, IE, IT, LU, MC, NL, PT, SE).

Published
With international search report.
Before the expiration of the time limit for amending the claims and to be republished in the event of the receipt of amendments.

(54) Title: FEEDING DEVICE FOR FIBROUS MATERIAL

(57) Abstract

A feeding device intended for refiners with two opposed refining means (11, 12), of which one is stationary and one rotary. The refining means are provided with refining elements (14, 15), which between themselves form a refining gap (17) with a refining zone (16) for working lignocellulosic fibrous material. The feeding device (22) comprises a circular disk (23) with at least one strip (24), which extends from a position close to the centre of the disk radially outward to the circumference of the disk. This strip (24) along the greater portion of its upper edge is provided with a roof (25) projecting out symmetrically on both sides of the strip. The feeding device (22) is intended to be placed centrally on the rotary refining means (12) with the strip (24) facing to a central material feed opening (19) in the stationary refining means (11).

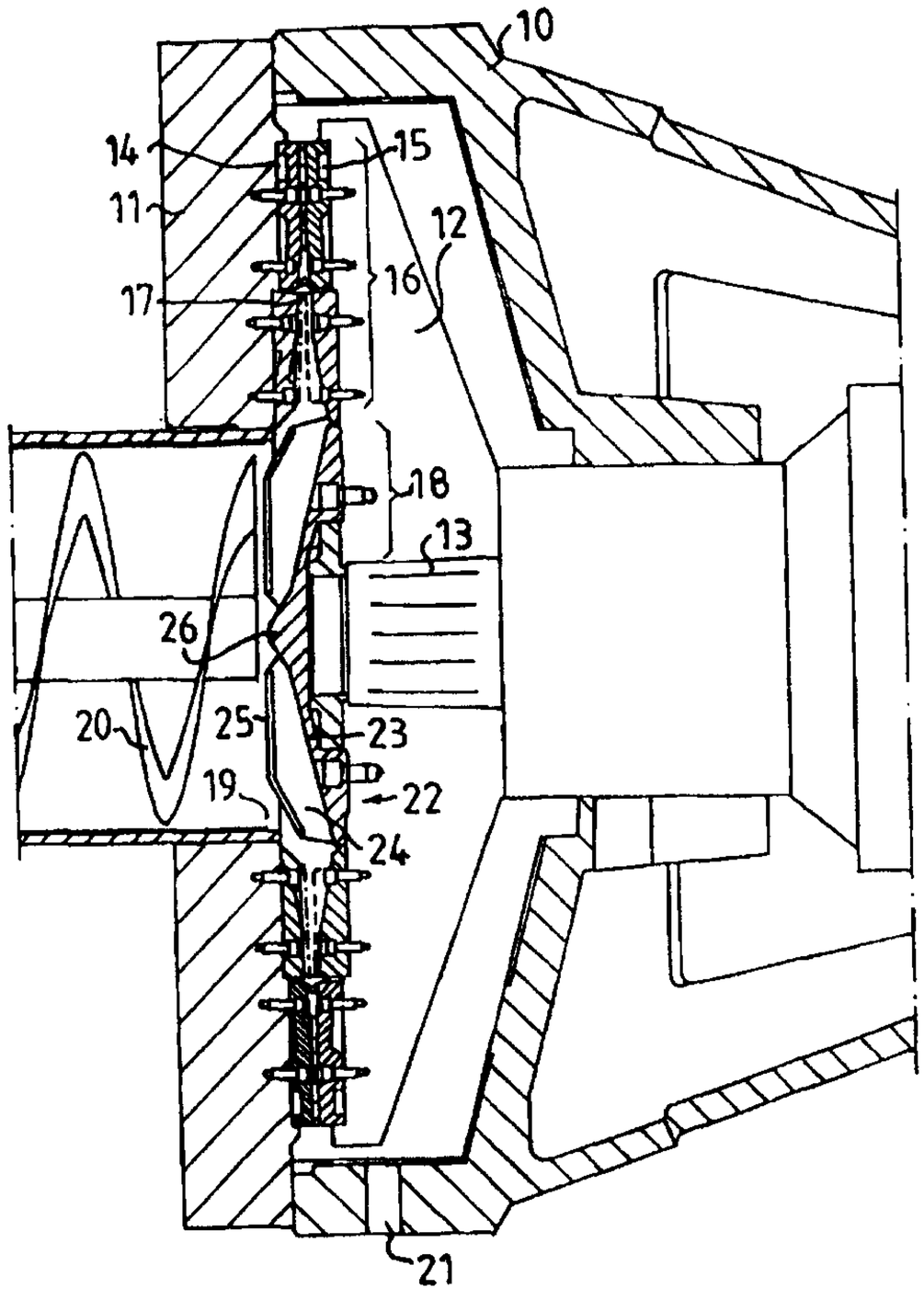

Feeding device for fibrous material

This invention relates to a device for treating lignocellulosic fibrous material in a refiner with opposed refining means rotating relative to each other, which are provided with refining elements, which between themselves form a refining gap with a refining zone for working the material. The material is supplied through a central opening in the stationary refining element to a feed zone located radially inside the refining zone. The invention, more precisely, refers to a feeding device for the material.

The device according to the invention can be used at the manufacture of various types of mechanical pulps, such as refiner mechanical pulp (RMP), thermo-mechanical pulp (TMP), chemi-mechanical pulp (CMP) and chemi-thermo-mechanical pulp (CTMP). The starting material can be wood chips or more or less worked pulp.

In the inner portion of the feed zone the effect of the centrifugal force on the supplied material is low. This implies, that the material supplied through the opening in the stationary refining element is not fed out sufficiently rapidly through the feed zone to the outside located refining zone. As a result thereof, the material can clog in the feed zone, which results in friction losses and non-uniform feeding, which in turn deteriorates the pulp quality. For overcoming these problems, mechanical feeding devices of different types have been arranged in the feed zone, for example wings, blades, strips or the like. These devices, however, have not worked satisfactorily, particularly not, when they have been designed so as to render the rotating refining means to reverse. It is often desired to be able to reverse the rotation of the refining means at pulp manufacture, because it can increase the life of the refining elements.

The feeding device according to the present invention solves the aforesaid problems in that it brings about an effective feed of the material while simul-

taneously accelerating it through the feed zone and at the same time allows the refining means to reverse with maintained effectiveness. The effective feed also contributes to a reduction of the energy consumption of the refiner.

The feeding device according to the invention comprises a disk with at least one radial strip, which along the greater portion of its upper edge is provided with a roof, which projects out symmetrically on both sides of the strip. The feeding device is intended to be replaced on the rotary refining means directly in front of the opening for the material supply in the stationary refining means.

Due to the design of the feeding device, the material supplied is accelerated outward by the strip or strips, while at the same time it is locked under the roofs of the strips. The width and length of the roof along the strips must be adapted so that it will not be too great and thereby objects the feed of the material through the stationary refining means. The roof, however, must be sufficiently wide for ensuring the transport of the material outward through the feed zone to the refining zone.

The characterizing features of the invention are apparent from the attached claims.

In accordance with the present invention, there is provided a feeding device for use in connection with a refiner for lignocellulosic fibrous material including a stationary refining member, a rotary refining member mounted for rotation in juxtaposition with said stationary refining member thereby forming a refining gap therebetween, a feeder for feeding said lignocellulosic fibrous material centrally to a central feed zone within said refining gap, and a refining zone extending radially outward from said central feed zone, said feeding

device comprising a disk having a central portion, an outer circumference, an upper surface and a lower surface for mounting on said rotary refining member at a central location in said central feed zone, said disk including at least one radially projecting strip extending from said central portion of said disk towards said outer circumference of said disk, said at least one radially projecting sitip including a body portion and a projecting portion extending laterally from said body portion at a location displaced from said upper surface of said disk for a major portion of said at least one radially projecting strip.

The invention is described in greater detail in the following by way of an embodiment thereof with reference to the accompanying drawings, in which

Fig. 1 is a cross-section of a refiner with a feeding device according to the invention;

Fig. 2 shows an embodiment of a feeding device;

Fig. 3 is a section through III-III in Fig. 2;

Fig. 4 is a section through IV-IV in Fig. 2.

The refiner shown in Fig. 1 comprises a refiner housing 10, in which a stationary refining means 11 (in this case the end wall of the refiner) and an opposed rotary refining means 12 attached on a rotary shaft 13 are arranged. The refining means 11, 12 are provided with refining elements 14 and, respectively, 15 which between themselves form a refining zone 16 in a refining gap 17. The refining gap 17 comprises an inside located feed zone 18. The stationary refining means 11 is formed with a central feed opening 19 for the material to be worked. A screw feeder 20 for the material is connected to the feed opening 19. The refiner housing 10 is provided with an outlet 21 for the material passing through the refining gap where it is worked to pulp.

On the rotary refining means a central feeding device 22 is located, which comprises a circular disk 23 with strips 24, which extend from a position close to the centre radially outward to the circumference of the disk. The number of strips should be at least one, suitably at least 2, preferably 2-3. The strips along the greater portion of their upper edges are provided with a roof 25, which projects out symmetrically on both sides of the strips.

According to the embodiment in Figs. 2-4, the disk 23 is formed with a hub 26, from which three radial strips 24 extend. The roof 25 leaves an opening at the hub and follows the strips 24 outwardly, preferably substantially out to the outer end of the strips. It is also possible that the roof 25 and strips 24 extend all the way to the centre of the disk 23. The height of the strips decreases outward in order to adapt to the outside located and outward tapering refining zone 16.

According to Fig. 1, the disk 23 has a diameter which corresponds to the diameter of the feed opening 19. Alternatively, the disk 23 and strips 24 can extend farther out in the refining gap 17. The refiner shown has plane refining means, but it is also possible to give the outer portion of the refining gap conical shape.

The feeding device 22 is designed symmetrically in order to render possible feed in both rotation directions.

The material fed by the screw feeder 20 into the refiner is caught by the strips 24 of the feeding device, locked under the roof 25 and accelerated outward along the strips. Disturbances from rearward flowing steam are at the same time minimized.

The invention, of course, is not restricted to the embodiment shown, but can be varied within the scope of the patent claims.

CLAIMS:

1. A feeding device for use in connection with a refiner for lignocellulosic fibrous material including a stationary refining member, a rotary refining member mounted for rotation in juxtaposition with said stationary refining member thereby forming a refining gap therebetween, a feeder for feeding said lignocellulosic fibrous material centrally to a central feed zone within said refining gap, and a refining zone extending radially outward from said central feed zone, said feeding device comprising a disk having a central portion, an outer circumference, an upper surface and a lower surface for mounting on said rotary refining member at a central location in said central feed zone, said disk including at least one radially projecting strip extending from said central portion of said disk towards said outer circumference of said disk, said at least one radially projecting strip including a body portion and a projecting portion extending laterally from said body portion at a location displaced from said upper surface of said disk for a major portion of said at least one radially projecting strip.

2. The feeding device of claim 1 wherein said body portion includes a first side and a second side, and said projecting portion extends laterally from both said first and second sides of said body portion.

3. The feeding device of claim 1 including at least two of said radially projecting strips.

4. The feeding device of claim 1 wherein the height of said at least one radially projecting strip decreases in

the radially outward direction.

5. The feeding device of claim 1 wherein said projecting portion extends laterally substantially to the outer edge of said radially projecting strip.

FETHERSTONHAUGH & CO.
OTTAWA, CANADA

PATENT AGENTS

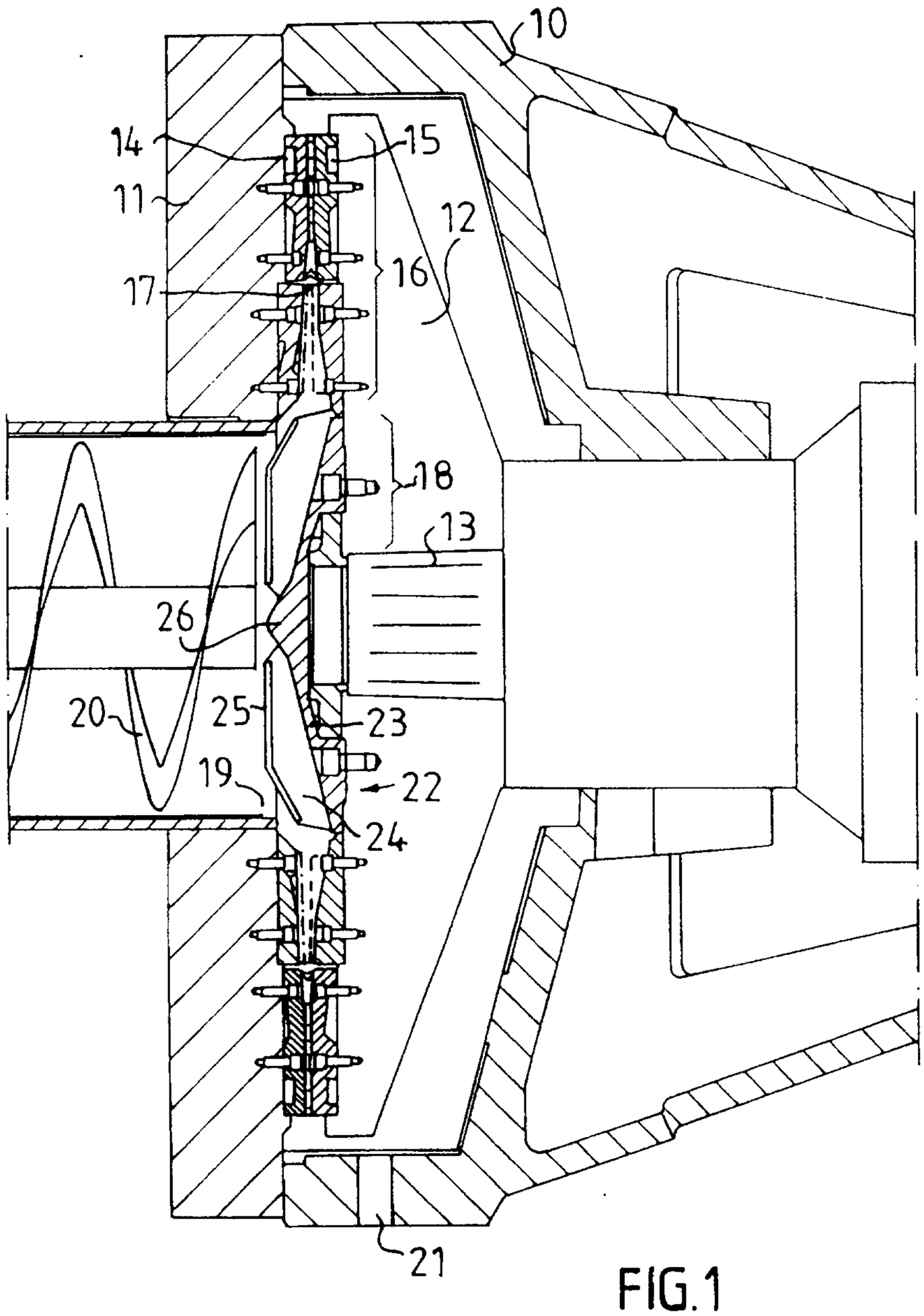

FIG.1

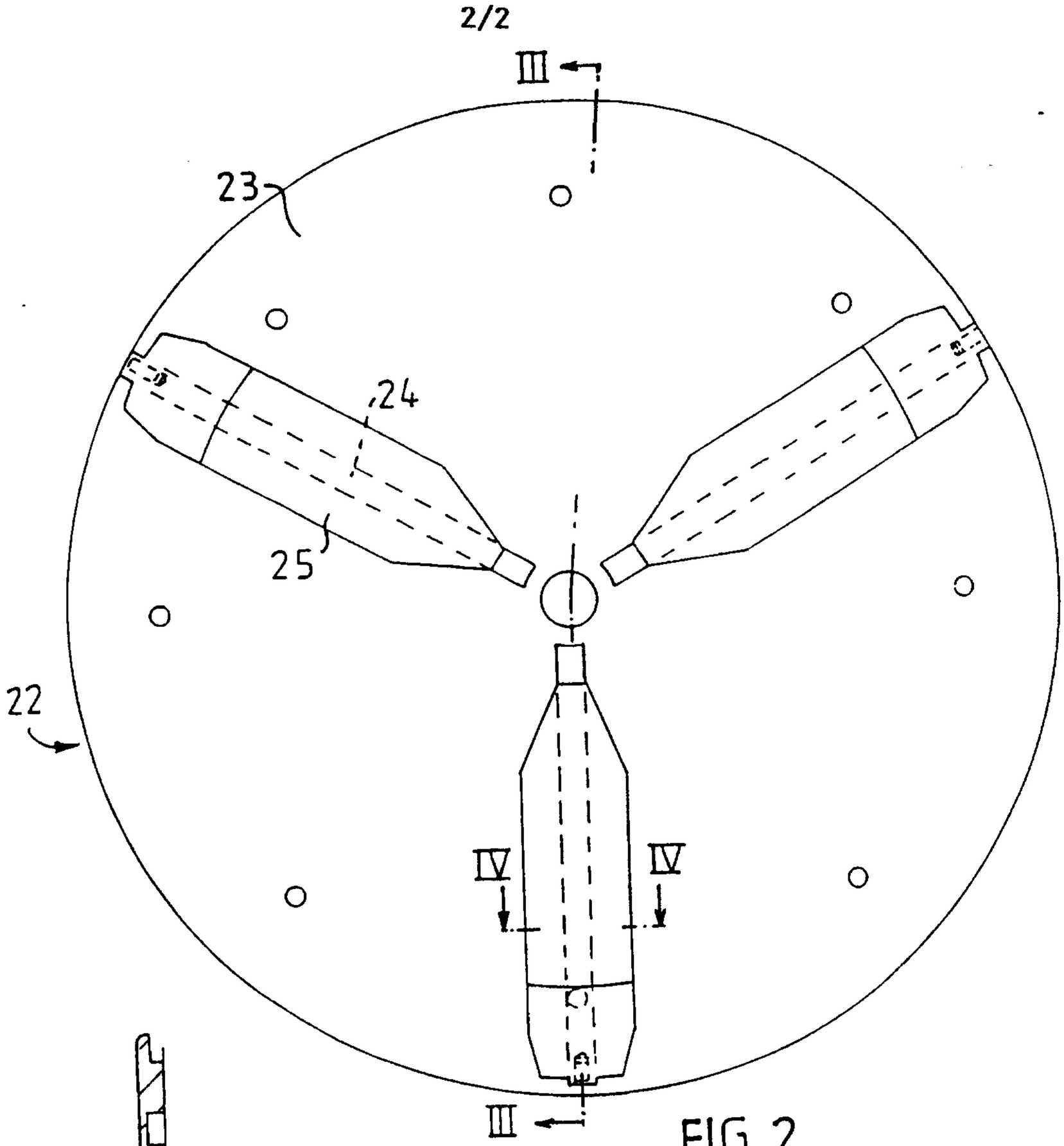

FIG. 2

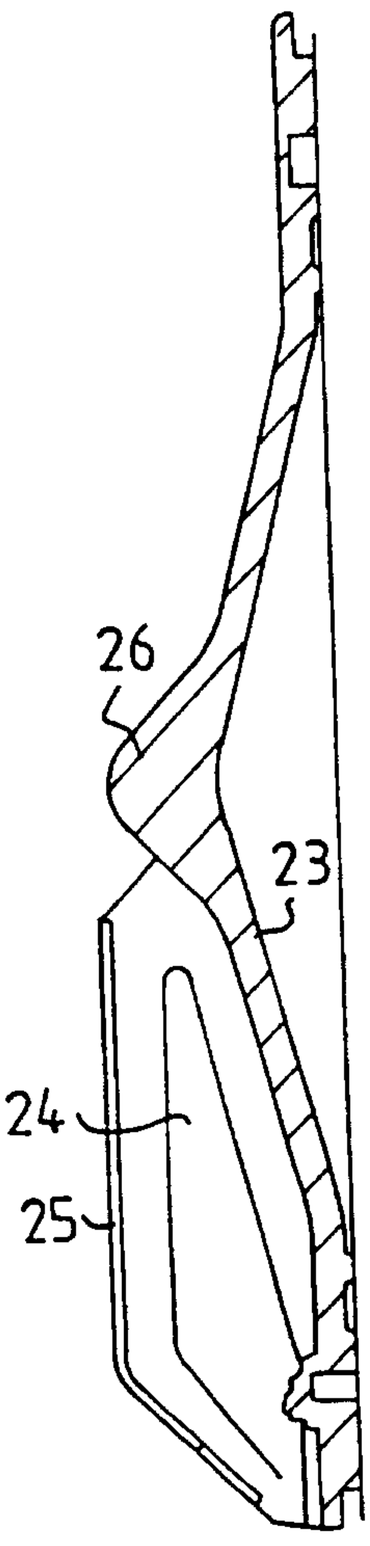

FIG. 3

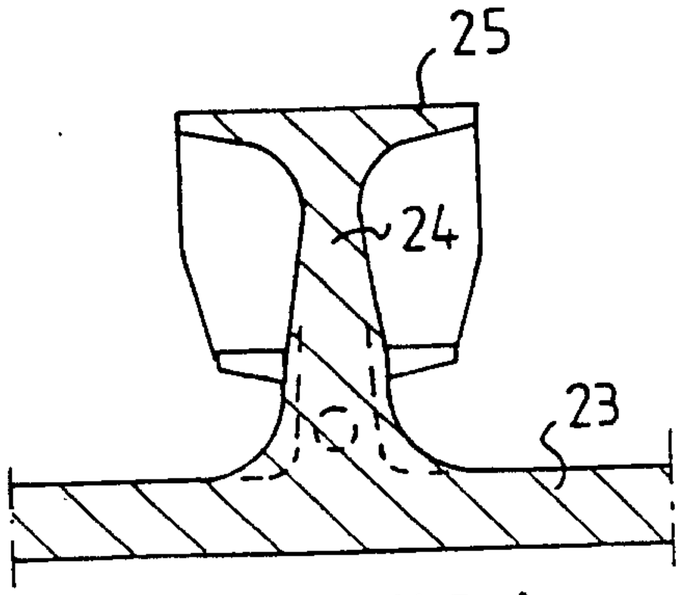

FIG. 4

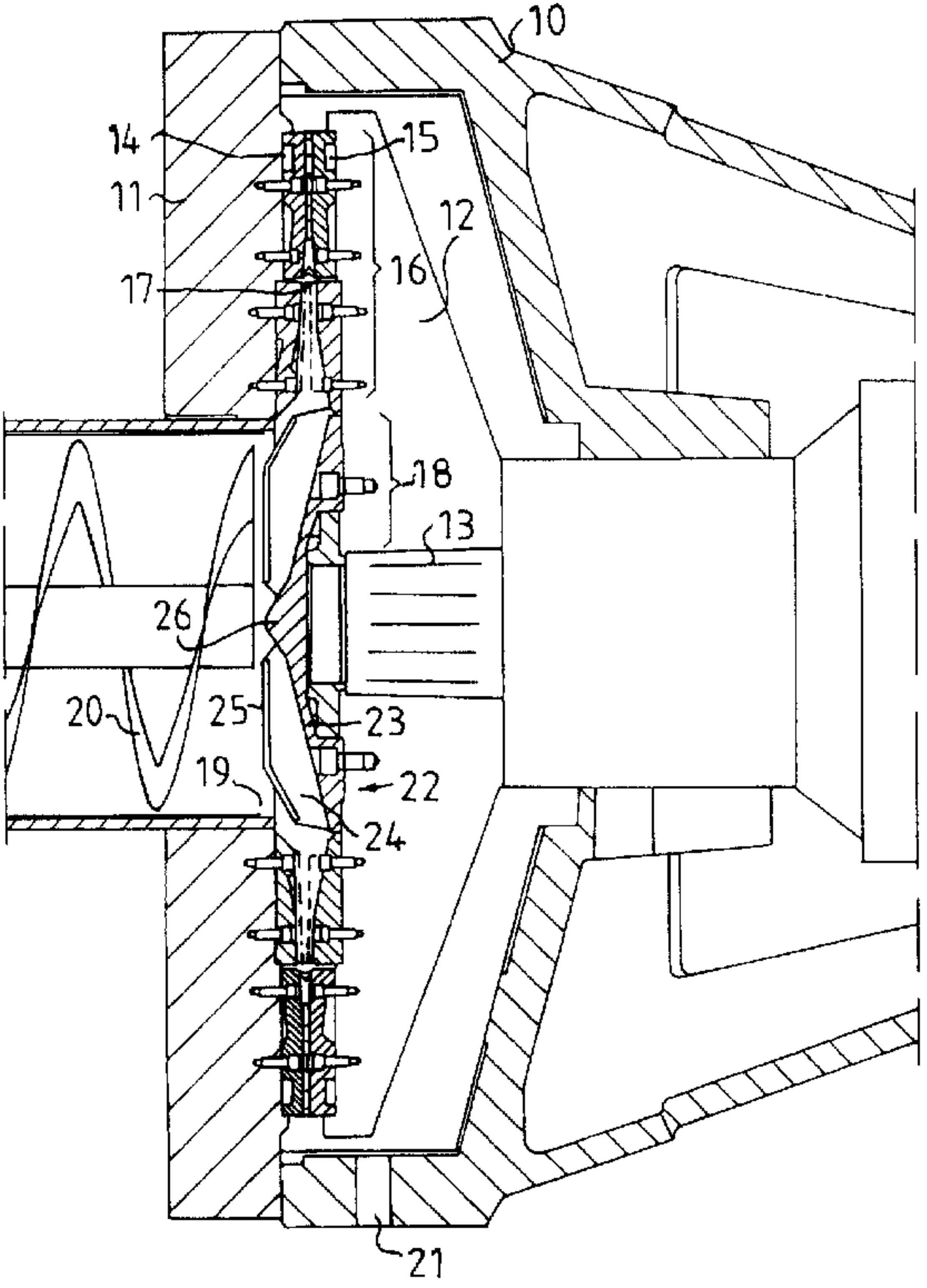
10
14
15
11
12
16
17
18
13
26
20
25
23
19
22
24
21