US 20050217527A1

(19) United States

(12) Patent Application Publication

(10) Pub. No.: US 2005/0217527 A1

(43) Pub. Date: Oct. 6, 2005

Ciesiun

(54) BIOLUMINESCENT PAINTBALL

(76) Inventor: **Paul M. Ciesiun**, Manhattan, IL (US)

Correspondence Address:
CHERSKOV & FLAYNIK
DONALD FLAYNIK
Suite 1447
20 N. WACKER DR
CHICAGO, IL 60606 (US)

(21) Appl. No.: **11/051,647**

(22) Filed: **Feb. 5, 2005**

Related U.S. Application Data

(60) Provisional application No. 60/542,592, filed on Feb. 6, 2004.

Publication Classification

(51) **Int. Cl.**[7] **F42B 30/00**

(52) **U.S. Cl.** **102/502**

(57) **ABSTRACT**

A Bioluminescent Paintball **10** includes a shell **12** defining an interior cavity **14**, a liquefied substance **16** disposed within the interior cavity **14**, a phosphorescent material **18** disbursed throughout the shell **12** for providing a visible "tracing" effect when the bioluminescent paintball **10** is ejected from a paintball discharge device, a neutralizing agent **20** disbursed throughout the liquefied substance **16** for neutralizing calcium disbursed throughout the liquefied substance **16** thereby preventing light emission before the paintball **10** impacts a target, and a photoprotein **22** disbursed throughout the liquefied substance **16** for reacting with calcium disposed upon a target after the bioluminescent paintball **10** impacts the target, thereby rupturing the shell **12** and allowing the liquefied substance **16** to engage the calcium to produce visible light.

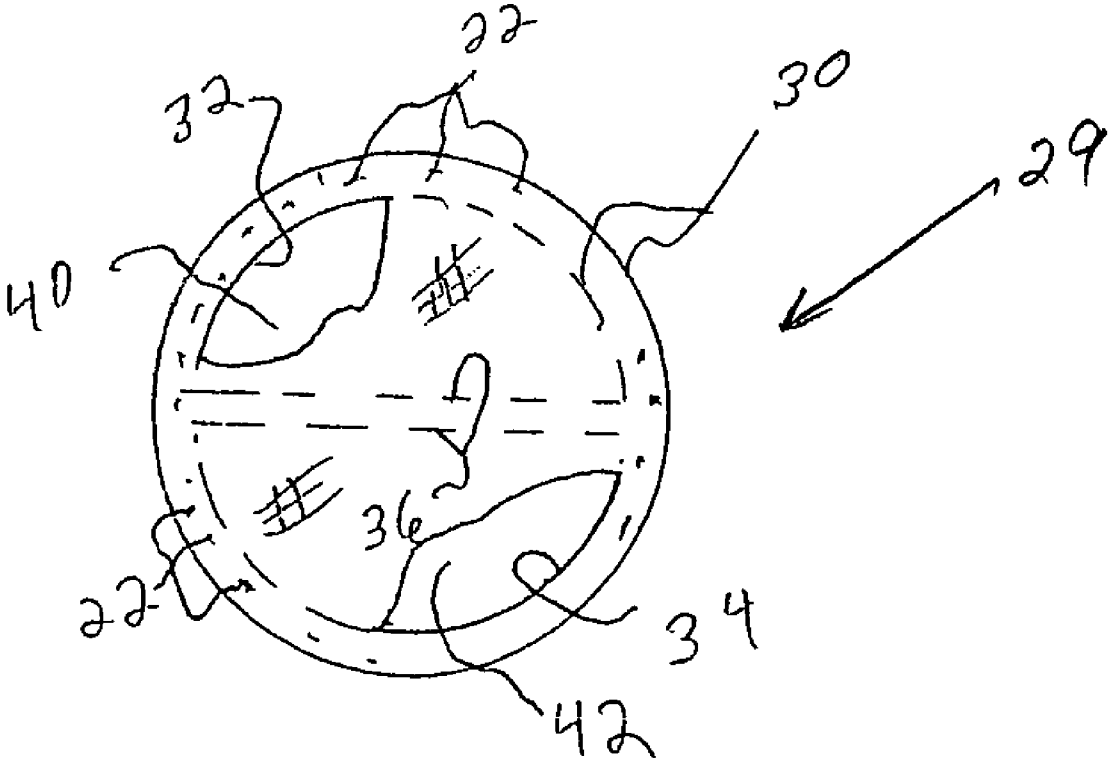

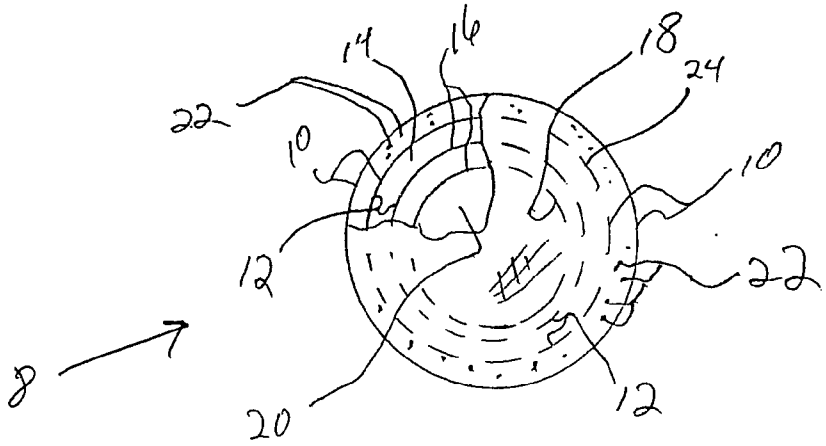

FIGURE 1

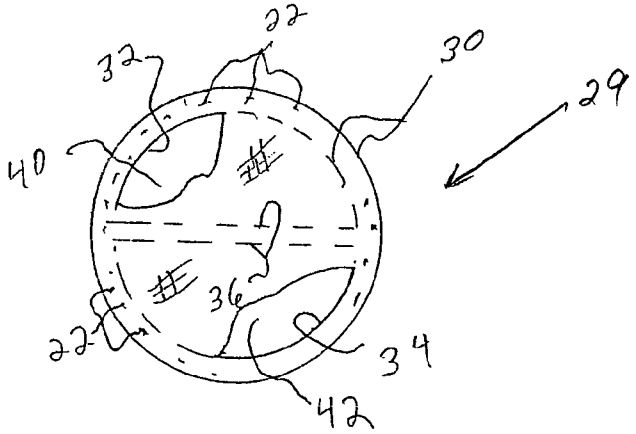

FIGURE 2

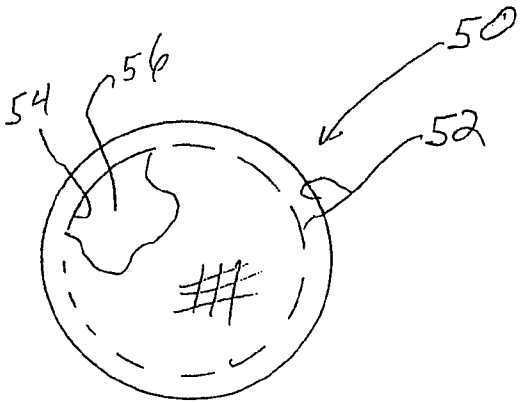

FIGURE 3

BIOLUMINESCENT PAINTBALL

[0001] This application is based on U.S. Provisional Application No. 60/542,592 filed on Feb. 6, 2004

BACKGROUND OF THE INVENTION

[0002] 1. Filed of the Invention

[0003] This invention relates to a luminescent projectile used during night time paintball play or night time training exercises by military or police forces by which "tracer" and "marking" projectiles are utilized in low light or dark conditions. The "tracer" effect serves as entertainment or a visual reference for a line of fire, which allows for corrections and adjustments to be made. Further, in daytime paintball games or in military and police exercises, the visible "marking" of a target by the contents of a projectile generally designates elimination from play or participation.

[0004] 2. Background of the Prior Art

[0005] The use of Luminescent paintballs is known in the prior art. The prior art includes U.S. Pat. No. 5,018,450; U.S. Pat. No. 3,774,022; U.S. Pat. No. 3,940,605; U.S. Pat. No. 4,706,568; U.S. Pat. No. 5,762,058; U.S. Pat. No. Des. 264,364; and U.S. Pat. No. 6,298,841.

[0006] The problem with prior art luminescent paintballs is that the effective brilliance and duration of visible light emitted from the phosphorescent material in the paintball, is a function of the intensity and duration of exposure of the phosphorescent material to ultraviolet (UV) light. More specifically, the phosphorescent material in a liquefied material in an inner portion of the paintball, receives less UV light than an outer shell portion resulting in reduced visible light being emitted from the phosphorescent material of the inner portion of the luminescent paintball; but because there is a larger quantity of phosphorescent material in the inner portion than in the outer shell, the magnitude of emitted visible light from the inner portion is comparable to the magnitude of emitted visible light from the outer shell.

[0007] After the luminescent paintball is discharged from a paintball "gun," the emitted visible light (and the tracing effect) from the projected paintball begins to decay. Prior art luminescent paintball having phosphorescent material in both the outer and inner portions provide an adequate tracing effect after being discharged from a paintball "gun." Prior art luminescent paintball having phosphorescent material in only the inner portion or only in the outer portion, provide an inadequate tracing effect after being discharged from a paintball gun.

[0008] Further, only the phosphorescent material of the inner portion marks or identifies a target struck during a nighttime luminescent paintball episode, because the outer shell ruptures and falls to the ground upon impacting the target. Should the phosphorescent material of the inner portion receive insufficient UV exposure or should the required marking time of the target be beyond the luminescent capabilities of the phosphorescent material, the luminescent paintball will correspondingly fail to identify a struck target thereby failing to promote the nighttime paintball episode.

[0009] A need exists for a glow in the dark paintball that provides a tracing effect when discharged from a paintball gun, and that provides a lasting marking feature when the paintball strikes a target. The tracing effect is provided by a phosphorescent material in only an outer shell of the paintball being exposed to UV light. The marking effect is provided by a light generating material in the inner portion of the paintball that does not require a UV light source, instead, the light generating material emits light due to a chemical reaction rather than by exposure to a UV light.

SUMMARY OF THE INVENTION

[0010] It is an object of the present invention to overcome many of the disadvantages associated with luminescent paintballs. Further, it is an object of the present invention to incorporate many of the features of the prior art luminescent paintball which include but are not limited to paintball configuration, fabrication materials, paints and filler materials (glycols and glycerins).

[0011] A principal object of the present invention is to provided a bioluminescent paintball that can be utilized for allowing paintball games to be played in daylight, low light or dark conditions utilizing nighttime glow and a variance of colors that would allow for vast market distribution. A feature of the bioluminescent paintball is a phosphorescent material disposed in an outer shell. Another feature is a calcium neutralizing agent and a photoprotein disbursed within a liquefied substance disposed in an inner cavity of the bioluminescent paintball, the photoprotein providing visual light when combined with calcium, the neutralizing agent preventing the production of light should calcium be present in the paintball. An advantage of the bioluminescent paintball is that the paintball provides a tracing effect upon being projected from a paintball gun, and provides a visual light marking effect and paint mark upon a target after the bioluminescent paintball impacts the target and ruptures the outer shell to allow the liquefied substance to engage calcium on the target to produce visible light.

[0012] Another object of the present invention is to provide an alternative bioluminescent paintball that can be utilized in daylight, low light or dark conditions. A feature of the alternative bioluminescent paintball is a phosphorescent material disposed in an outer shell. Another feature is a first liquefied substance and an inner shell disposed within the outer shell, the first liquefied substance includes a protein disbursed therein. Yet another feature is a second liquefied substance disposed within the inner shell, the second liquefied substance includes an enzyme disbursed therein. An advantage of the alternative bioluminescent paintball is that the paintball provides a tracing effect when ejected from a paintball discharge device. Another advantage of the alternative bioluminescent paintball is that the paintball provides a visual light marking effect and paint mark upon a target after the paintball impacts the target thereby rupturing the outer and inner shells and allowing the first and second liquefied substances in the shells to flow together to produce light to mark the target. This alternative bioluminescent paintball provides light without requiring the presence of calcium on the target, but the alternative paintball is more expensive to manufacture than the calcium reactive paintball.

[0013] Still another object of the present invention is to provide another alternative bioluminescent paintball that provides visible light without the presence of calcium on the target. A feature of the alternative paintball is a phospho-

rescent material disposed in an outer shell. Another feature of the alternative paintball is an inner wall inside the outer shell, the inner wall forming a first inner cavity containing a first liquid substance with an enzyme disbursed therein, and a second inner cavity containing a second liquid substance with a protein disbursed therein. An advantage of this alternative paintball is that the paintball provides a tracing effect when projected from a paintball discharge device. Another advantage of this paintball is that the internal configuration promotes stability during flight and reduces the "bursting force" required to combine the enzyme and protein. This paintball requires the rupturing of only an inner wall upon target impact to provide visible light. The above alternative bioluminescent paintball requires the rupturing of an outer shell and an inner shell. Also, the inner shell has a tendency to move inside the outer shell during flight thereby reducing accuracy when shooting a target.

[**0014**] Briefly, the invention provides a bioluminescent paintball comprising a shell defining an interior cavity; a liquefied substance disposed within said cavity; a phosphorescent material disposed within said shell, said phosphorescent material providing a tracer effect when said bioluminescent paintball is ejected from a paintball discharge device; a neutralizing agent disbursed within said liquefied substance; and a photoprotein disbursed within said liquefied substance, said photoprotein producing visible light when combined with an ion such as calcium on a target after said bioluminescent paintball impacts the target thereby rupturing said shell and allowing said liquefied substance to engage the target.

[**0015**] The invention further provides a bioluminescent paintball comprising an outer shell defining a first interior cavity; a first liquefied substance disposed within said first interior cavity; an inner shell disposed within said first interior cavity, said inner shell defining a second interior cavity; a second liquefied substance disposed within said second interior cavity; a phosphorescent material disposed within said outer shell, said phosphorescent material providing a tracer effect when said bioluminescent paintball is ejected from a paintball discharge device; a protein disbursed within said first liquefied substance in said first interior cavity; an enzyme disbursed within said second liquefied substance in said second interior cavity, said enzyme and protein producing visible light when combined after said bioluminescent paintball impacts a target thereby rupturing said outer and inner shells and allowing said first and second liquefied substances in said first and second interior cavities to flow together to produce light to mark the target.

[**0016**] The invention further provides a bioluminescent paintball comprising an outer shell defining first and second inner cavities separated by an inner wall; a first liquid substance disposed within said first inner cavity; a second liquid substance disposed within said second inner cavity; a phosphorescent material disposed within said outer shell, said phosphorescent material providing a tracer effect when said bioluminescent paintball is ejected from a paintball discharge device; an enzyme disbursed within said first liquid substance in aid first interior cavity; a protein disbursed within said second liquid substance in said second interior cavity, said enzyme and protein producing visible light when combined after said bioluminescent paintball impacts a target thereby rupturing said outer shell and said inner wall and allowing said first and second liquid substances in said first and second inner cavities to flow together to produce light to mark the target.

BRIEF DESCRIPTION OF THE DRAWINGS

[**0017**] These and other objects, advantages and novel features of the present invention, as well as details of an illustrative embodiment thereof, will be more fully understood from the following detailed description and attached drawings, wherein:

[**0018**] **FIG. 1** is a front elevation, partial phantom-partial cutaway view of a bioluminescent paintball having light generating protein and enzyme substances in separate inner cavities in accordance with the present invention.

[**0019**] **FIG. 2** is a front elevation, partial phantom-partial cutaway view of the bioluminescent paintball of **FIG. 1** but with an alternative design for the inner cavities in accordance with the present invention.

[**0020**] **FIG. 3** is a front elevation, partial phantom-partial cutaway view of a bioluminescent paintball having one cavity with an ion reactive photoprotein substance disbursed therein in accordance with the present invention.

DESCRIPTION OF THE PREFERRED EMBODIMENT

[**0021**] Referring now to the drawings and in particular to **FIG. 1**, a bioluminescent paintball in accordance with the present invention is denoted by numeral **8**. The bioluminescent paintball **8** includes a breakable solid spherical outer shell **10** constructed of two hemispheres fused together to create an interior chamber or cavity **12** containing a first liquefied substance **14**. The paintball **8** further includes an inner breakable solid spherical shell **16** disposed inside the outer shell **10** and in the first liquefied substance **14**. The inner shell **16** defines a second interior cavity **18** containing a second liquefied substance **20**. A phosphorescent material or glow powder **22** is disposed within the outer shell **10**. Saline with a pH 7.6 or similar liquefied is disbursed within the first liquefied substance **14**. Also included in the liquefied substance **14** is a luciferase or protein, a calcium-neutralizing agent such as EDTA, and dyes, paints or colorants of white or similar bright colors. Coelenterazine or CTZ (luciferin) or similar enzyme is disbursed within the second liquefied substance **20**, which is purged of air bubbles and air pockets and may contain fillers such as propylene glycol. The proteins and enzymes are disclosed in U.S. Pat. Nos. 6,232,107 and 6,436,682 belonging to Prolume Ltd. of PO Box 2746 Pinetop, Ariz. 85935 and Bruce J. Bryan of Beverly Hills, Calif. 90210.

[**0022**] The inner spherical shell **16** is approximately ⅔ the size of the outer shell **10**. The inner macro or micro encapsulated sphere may be produced but is not limited to materials such as plastics, gelatins, waxes, or synthetic polymers. An inner sphere would be free from defects and could be manufactured in a process of seamless encapsulation. Special machines such as the Globex Mark III Capsulator are utilized in the manufacture of capsules in this manner and are manufactured by a company such as ITS Machinery Development.

[**0023**] The outer shell **10** may be comprised of insoluble materials such as plastics, waxes and hardeners such as

carnauba, candelilla, bees, paraffin, and stearic acid or synthetic polymers. The outer shell **10** may also consist mainly of gelatin, so long as an inner spherical wall **24** in contact with the first liquefied substance **14** is coated, treated, or filmed with an insoluble barrier constructed from waxes, proteins, synthetic polymers or natural polymers such as Chitosan, an amorphous polymer of deacylated chitin. This insoluble barrier allows for conventional gelatin materials to be used while encapsulating usually non-compatible materials within the gelatin shell. In this embodiment it is intended that when the paintball is projected at sufficient force that both the outer and inner shells **10** and **16** fracture and expel respective first and second liquefied substances **14** and **20** causing a mixture and subsequent chemical reaction. Luciferase catalyzes the oxidation of the Coelentrazine or Luciferin, this results in a reaction causing light and resulting in an inactive Oxyluciferin.

[**0024**] Luciferin and Luciferase may also be bound to a cofactor such as oxygen (O_2) in order to create a single photoprotein, or a molecule, which is reactive with ions such as Calcium (Ca2++) in order to facilitate an ion exchange and chemical reaction, which produces visible light. This configuration of compounds in fact comprises the preferred embodiment of the invention.

[**0025**] Referring now to **FIG. 2**, an alternative embodiment **29** in accordance with the present invention is depicted. The alternative embodiment **29** includes a breakable solid spherical outer shell **30** formed from two hemispheres fused together to define first and second inner cavities **32** and **34** separated by an inner wall **36**. The outer shell **30** is insoluble and includes a phosphorescent material **22** disposed within the shell **30**, a first liquid substance **40** disposed in the first inner cavity **32**, and a second liquid substance **42** disposed in the second inner cavity **34**. Coelentrazine (Luciferin) or similar enzyme is disbursed within the first liquid substance **40**, which is purged of air bubbles and air pockets. Saline with a pH of approximately 7.6 is disbursed within the second liquid substance **42**. Also included in the second liquid substance **42** is a Luciferase or protein, and dyes, paints or colorants.

[**0026**] The phosphorescent material **22** glows in the dark after being exposed to a light for a period of time and said liquefied substance and subsequent dyes providing a reflective background in order to increase the brilliance and duration of the glowing phosphors. Further a light with a higher concentrate of Ultraviolet (UV) light, generally increases the potential for energy absorption on a smaller timeline, and increases overall duration and brilliance of a nighttime glow. The phosphorescent materials may be comprised of a multitude of powders loaded at up to 10% by weight into the outer spherical shell. The phosphors may consist of Aluminum, Europium, Strontium, Iridium or Boron Oxides which provide a wide array of colors including but not limited to Orange, Green, Yellow, Blue, Purple, Red, Red-Orange, Blue-Green and Aqua. Said phosphors being constructed by Hirotec, Inc. of Santa Ana, Calif. and Nichia America of Mountville, Pa.

[**0027**] Referring now to **FIG. 3**, a third and preferred embodiment **50** in accordance with the present invention is depicted. The preferred embodiment includes a homogenous liquefied mixture **56** having ions such as Calcium (Ca2++) neutralized by a calcium neutralizing agent such as EDTA, a photoprotein (bound Luciferin and Luciferase by a cofactor such as Oxygen) a single ion reactive compound added to the liquefied substance, renders the entire mixture "reactive" in that when in contact with an ion a chemical reaction occurs which generates visible light. Thus, when the liquefied substance is expelled from a fractured paintball upon a target containing an ion, most notably calcium, the liquefied substance yields a bright visible "glow", which is satisfactory to identify a "mark" or strike on a target in low light or dark conditions.

[**0028**] In a preferred embodiment **50** of the present invention, a water insoluble phosphor comprised mainly of such as those manufactured by Nichia America. Phosphors can include but are not limited to the following chemical composition and product number:

[**0029**] Blue-green $Sr_4Al_{14}O_{25}$:Eu,Dy (Nichia product NP-2820)

[**0030**] Reddish-Orange Y_2O_2S:Eu,Mg,Ti (Nichia product NP-2850)

[**0031**] Green $SrAl_2O_4$:Eu,Dy (Nichia product NP-2830)

[**0032**] Additionally in the preferred embodiment **50** of the present invention, a photoprotein a single reactive compound, and ion neutralizer most notably a calcium neutralizer, are disposed in the liquefied substance **56** of an inner cavity **54** created by an outer breakable solid spherical shell **52** comprised of two fused hemispheres and of which can be comprised of gelatins, plasticizers, waxes, or synthetic polymers. The internal surface of which comes into contact with the liquefied substance or which would but with the treatment of a film, coating, or resin, such as proteins, chitin or waxes, prior to encapsulating the liquefied substance creates an insoluble barrier between the inner surface of the outer gelatin shell an the liquefied substance. Therefore creating a homogenous mixture that will ultimately generate visible light after said paintball fractures against a selected target.

[**0033**] A fourth embodiment (not depicted) in accordance with the present invention, is the introduction of a water insoluble phosphor into a saline filler material which is perfectly clear and is encased in an outer shell which is also transparent or translucent. This embodiment provides an environment that contains a new water based or alcohol based filler material and to which a unique phosphor may be added in order to generate a tracing and marking effect. With the use of water and alcohol based filler materials, a completely clear filler may be used to reduce the amount of phosphors and reduce the overall cost of the product.

[**0034**] The photoprotein of the preferred embodiment **50** allows for the generation of sufficient light regardless of overall impact area to effectively mark a target in low light or dark conditions. As with photo-storage materials and the use of surfactants to suspend these materials the more dispersion of an impact, the less concentration of energized phosphors and therefore less brilliance and effectiveness. In this preferred embodiment of the invention, the photoprotein is dissolved within the liquefied substance prior to encapsulation at a load ratio sufficient to render the entire liquefied substance ion reactive. This should be approximately 0.5-1% load by weight of a 3.5 g paintball.

[**0035**] Referring back to **FIG. 3**, the depicted bioluminescent paintball **50** generally comprises an outer, break-

able, solid spherical shell **52** fabricated of insoluble material, utilizes an insoluble barrier or materials such as gelatin. The outer shell **52** defines an interior cavity **54** having a liquefied substance **56** disposed therein, a phosphorescent material **22** disposed within the shell **52**, the phosphorescent material providing a tracer effect when the bioluminescent paintball **50** is ejected from a paintball discharge device, an ion neutralizing agent disbursed within the liquefied substance **56**, an ion reactive photoprotein disbursed within the liquefied substance **56**, to engage the target. The outer shell **52** may be formed of transparent, translucent or pigmented material so long as the material is constructed from solid materials such as gelatins, plastics, or synthetic or organic polymers, which are capable of withstanding forcible projection. The outer shell **52** must also be capable of fracturing upon engaging a participant without injuring that individual.

[**0036**] The liquefied substance **56** disposed within the spherical shell **52** may include but is not limited to, saline, polyethylene glycols, waxes, surfactants, oils, gelatins, glycerin, and thickening agents such as fumed silica and sorbitol, but the liquefied substance **56** is composed mostly of saline. The liquefied substance **56** may be dyed, opaque, or may be a translucent or transparent substance.

[**0037**] A phosphorescent material **22** is disposed on or within the outer spherical shell **52** for tracer effects in Ultraviolet, low light or dark conditions. The most preferred phosphors do not include materials that are known to be toxic, and do not include radioactive materials. One highly suitable insoluble phosphor is available from Nichia America Corporation of 3775 Hempland Road, Mountville, PA 17554. The Nichia phosphors includes the following materials:

[**0038**] Blue-green $Sr_4Al_{14}O_{25}$:Eu,Dy (Nichia product NP-2820)

[**0039**] Reddish-Orange Y_2O_2S:Eu,Mg,Ti (Nichia product NP-2850)

[**0040**] Green $SrAl_2O_4$:Eu,Dy (Nichia product NP-2830)

[**0041**] Another highly suitable phosphor is available under the trade name "PERMAGLOW™ Premium Glow-in-the-Dark colors" from Hirotec Inc. of 16162 Beach Blvd., Suite 306, of Huntington Beach, Calif. 92647. The PERMAGLOW product includes the following materials:

Material	Notation	Chemical No.	TSCA No.
Aluminum Oxide	Al2O3	1-23	1344-28-1
Strontium Oxide	SrO	9-2441	1314-11-0
Europium Oxide	Eu2O3	1-679	1308-96-9
Boron Oxide	B2O3	9-2403	1303-86-2

[**0042**] The phosphorescent material **22** is capable of producing light after being charged with a light energy source for a period of time to achieve the desired tracer effect. The duration of the production of light is directly related to the time of exposure to a light source to achieve the desired duration.

[**0043**] Overall these new phosphorescent materials **22** contain new characteristics capable of providing the new luminescent paintball with a multitude of colors such as blue, green, blue-green, red, reddish-orange, yellow, orange, violet, pink, aqua, chartreuse and any Pantone™ colors which can be manufactured as needed.

[**0044**] The liquefied substance **56** includes an ion-neutralizing agent such as ethelenediaminetetraacetic acid (EDTA). This calcium-neutralizing agent establishes a stable environment for the introduction of an ion reactive protein or photoprotein into the liquefied substance **56**. The EDTA is mixed within the liquefied substance **56** prior to encapsulation into the paintball **50**.

[**0045**] After the mixture of EDTA or similar ion neutralizing agent into the liquefied substance **56**, an ion reactive photoprotein similar to the enzymes in U.S. Pat. Nos. 6,436,682, 6,247,995, 6,232,107, 6,113,886, 6,152,358, 5,876,995 and made by PROLUME LTD, 163 White Mountain, Pinetop Ariz. USA, 85935, is dissolved into the liquefied substance. This photoprotein is capable of reacting with ions such as calcium or objects containing calcium and producing visible light in the chemical reaction, lasting from several seconds up to ten minutes and satisfying the necessary marking effect in a low light or dark environment.

[**0046**] The addition of this photoprotein produces visible light when the liquefied substance **56** disposed in an inner cavity **54** of the paintball **50** engages a target containing an ion such as calcium (Ca2++). More specifically, when the paintball **50** is forcibly ejected from a paintball gun or discharge device to ultimately engage a target, the outer spherical shell **52** of the paintball **50** ruptures, thereby allowing the inner liquefied substance **56** to engage the target and react with the calcium naturally existing upon a target to produce light. This production of light creates a marking effect on the target that lasts for a predetermined period of time and thus satisfying one vital aspect to an effective luminescent paintball.

[**0047**] The employment of the photoprotein allows for the possibility to exclude phosphors **22** from the liquefied substance, while relegating phosphors instead to the outer spherical shell **52**. These phosphors may be used in conjunction with a saline fill without the concern for dissolution and thus complete ineffectiveness. Further, when excited these phosphors produce a visible light used to generate a tracer effect necessary for the correction of firing and accurate aiming when engaging a target.

[**0048**] The result is a new luminescent paintball **50**, which provides a necessary dual system of tracing and marking. This further enhances the possibility to develop a game or exercise program in association with the use of this new invention.

[**0049**] The foregoing description is for purposes of illustration only and is not intended to limit the scope of protection accorded this invention. The scope of protection is to be measured by the following claims, which should be interpreted as broadly as the inventive contribution permits.

1. A bioluminescent paintball comprising:

a shell defining an interior cavity;

a liquefied substance disposed within said cavity;

a phosphorescent material disposed within said shell, said phosphorescent material providing a tracer effect when said bioluminescent paintball is ejected from a paintball discharge device;

a neutralizing agent disbursed within said liquefied substance; and

a photoprotein disbursed within said liquefied substance, said photoprotein producing visible light when combined with an ion such as calcium on a target after said bioluminescent paintball impacts the target thereby rupturing said shell and allowing said liquefied substance to engage the target.

2. The bioluminescent paintball of claim 1, wherein said shell material comprises an insoluble material capable of projection from a paintball gun and capable of rupturing upon impacting a target.

3. The bioluminescent paintball of claim 1, wherein said liquefied substance is selected from the group consisting of saline, triols, polyethylene glycols, oils, gelatins, glycerin, thickening agents and combinations thereof.

4. The bioluminescent paintball of claim 1, wherein said liquefied substance includes dispersing agents.

5. The bioluminescent paintball of claim 1, wherein said liquefied substance includes thickening agents.

6. The bioluminescent paintball of claim 5, wherein said thickening agents include fumed silica.

7. The bioluminescent paintball of claim 5, wherein said thickening agents include sorbitol.

8. The bioluminescent paintball of claim 1, wherein said liquefied substance includes saline.

9. The bioluminescent paintball of claim 1, wherein said phosphorescent material is selected from the group consisting of aluminum oxide, strontium oxide, europium oxide, boron oxide, Iridium oxide and combinations thereof.

10. The bioluminescent paintball of claim 1, wherein said ion neutralizing agent includes ethelenediaminetetraacetic acid (EDTA).

11. The bioluminescent paintball of claim 1, wherein said ion reactive photoprotein is selected from a group consisting of coelentrazine, luciferins and combinations thereof.

12. A bioluminescent paintball comprising:

an outer shell defining a first interior cavity;

a first liquefied substance disposed within said first interior cavity;

an inner shell disposed within said first interior cavity, said inner shell defining a second interior cavity;

a second liquefied substance disposed within said second interior cavity;

a phosphorescent material disposed within said outer shell, said phosphorescent material providing a tracer effect when said bioluminescent paintball is ejected from a paintball discharge device;

a protein disbursed within said first liquefied substance in said first interior cavity;

an enzyme disbursed within said second liquefied substance in said second interior cavity, said enzyme and protein producing visible light when combined after said bioluminescent paintball impacts a target thereby rupturing said outer and inner shells and allowing said first and second liquefied substances in said first and second interior cavities to flow together to produce light to mark the target.

13. The bioluminescent paintball of claim 12, wherein said outer and inner shell comprises an insoluble material capable of projection from a paintball gun and capable of rupturing upon impacting a target.

14. The bioluminescent paintball of claim 12, wherein said first liquefied substance is selected from the group consisting of saline, triols, polyethylene glycols, oils, propylene glycol, gelatins, glycerin, thickening agents and combinations thereof.

15. The bioluminescent paintball of claim 12, wherein said first liquefied substance includes dispersing agents.

16. The bioluminescent paintball of claim 12, wherein said first liquefied substance includes thickening agents.

17. The bioluminescent paintball of claim 16, wherein said thickening agents include fumed silica.

18. The bioluminescent paintball of claim 16, wherein said thickening agents include sorbitol.

19. The bioluminescent paintball of claim 12, wherein said first liquefied substance includes saline.

20. The bioluminescent paintball of claim 12, wherein said phosphorescent material is selected from the group consisting of aluminum oxide, strontium oxide, europium oxide, boron oxide, Iridium oxide and combinations thereof.

21. The bioluminescent paintball of claim 12, wherein said second liquefied substance includes saline.

22. The bioluminescent paintball of claim 12, wherein said enzyme includes ceolentrazine or CTZ.

23. The bioluminescent paintball of claim 12, wherein said enzyme includes luciferin.

24. The bioluminescent paintball of claim 12, wherein said protein includes luciferase.

25. The bioluminescent paintball of claim 12, wherein said second liquefied substance includes an ion-neutralizing agent.

26. The bioluminescent paintball of claim 25, wherein said ion neutralizing agent includes ethelenediaminetetraacetic acid (EDTA).

27. The bioluminescent paintball of claim 12, wherein said second liquefied substance includes colorants, pigments or dyes.

28. A bioluminescent paintball comprising:

an outer shell defining first and second inner cavities separated by an inner wall;

a first liquid substance disposed within said first inner cavity;

a second liquid substance disposed within said second inner cavity;

a phosphorescent material disposed within said outer shell, said phosphorescent material providing a tracer effect when said bioluminescent paintball is ejected from a paintball discharge device;

an enzyme disbursed within said first liquid substance in said first interior cavity;

a protein disbursed within said second liquid substance in said second interior cavity, said enzyme and protein producing visible light when combined after said bioluminescent paintball impacts a target thereby rupturing said outer shell and said inner wall and allowing said

first and second liquid substances in said first and second inner cavities to flow together to produce light to mark the target.

29. The bioluminescent paintball of claim 28, wherein said outer shell and said inner wall comprises an insoluble material capable of projection from a paintball gun and capable of rupturing upon impacting a target.

30. The bioluminescent paintball of claim 28, wherein said first liquid substance is selected from the group consisting of saline, triols, polyethylene glycols, oils, gelatins, glycerin, thickening agents and combinations thereof.

31. The bioluminescent paintball of claim 28, wherein said first liquid substance includes dispersing agents.

32. The bioluminescent paintball of claim 28, wherein said thickening agents.

33. The bioluminescent paintball of claim 32, wherein said thickening agents include fumed silica.

34. The bioluminescent paintball of claim 32, wherein said thickening agents include sorbitols.

35. The bioluminescent paintball of claim 28, wherein said first liquid substance includes saline.

36. The bioluminescent paintball of claim 28, wherein said phosphorescent material is selected from the group consisting of aluminum oxide, strontium oxide, europium oxide, boron oxide, Iridium oxide and combinations thereof.

37. The bioluminescent paintball of claim 28, wherein said second liquid substance includes saline.

38. The bioluminescent paintball of claim 28, wherein said enzyme includes ceolentrazine or CTZ.

39. The bioluminescent paintball of claim 28, wherein said enzyme includes luciferin.

40. The bioluminescent paintball of claim 28, wherein said protein includes luciferase.

41. The bioluminescent paintball of claim 28, wherein said second liquefied substance includes an ion-neutralizing agent.

42. The bioluminescent paintball of claim 41, wherein said ion neutralizing agent includes ethelenediaminetetraacetic acid (EDTA).

43. The bioluminescent paintball of claim 28, wherein said second liquefied substance includes colorants, pigments or dyes.

* * * * *