Nov. 11, 1930. L. SMEDE 1,781,305

ANODE OF CARBONIZED IRON OR THE LIKE

Filed Oct. 11, 1927

Fig. 1

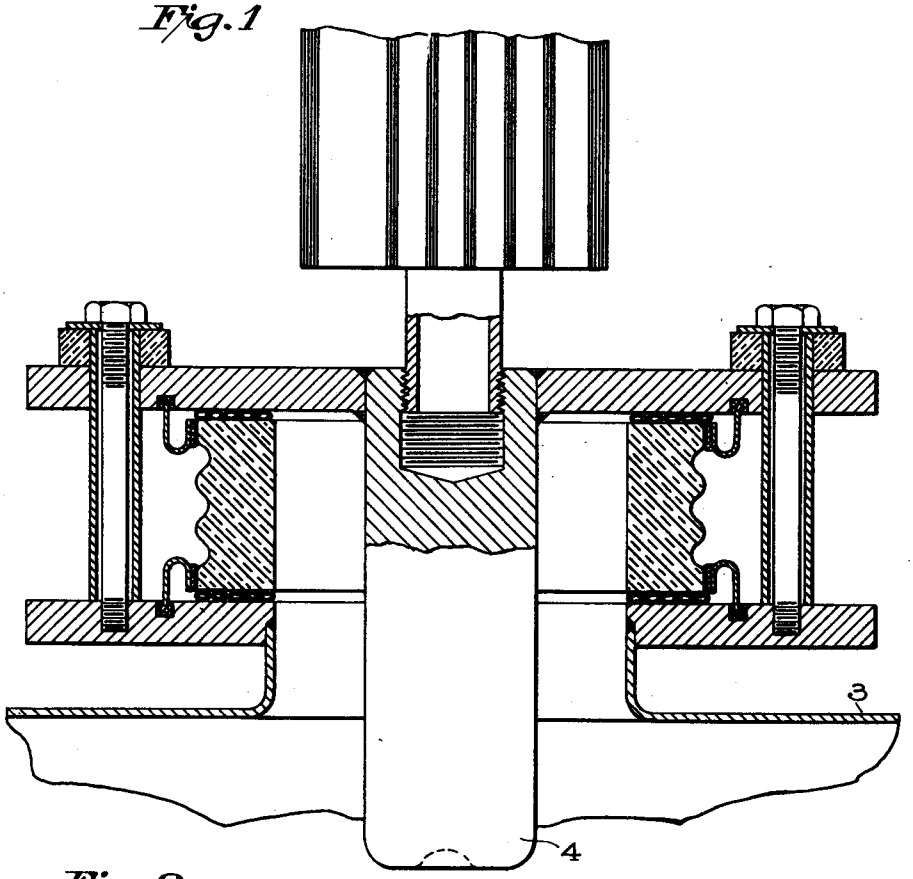

Fig. 2.

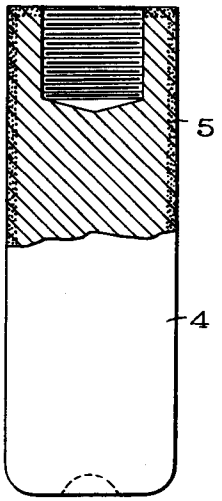

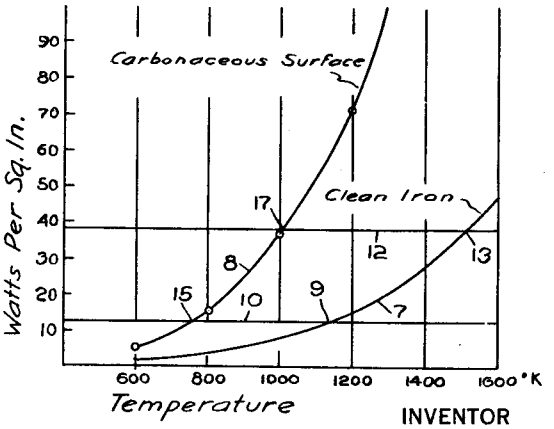

Fig. 3.

INVENTOR

Lloyd Smede

BY

Wesley R. Barr

ATTORNEY

Patented Nov. 11, 1930 1,781,305

UNITED STATES PATENT OFFICE

LLOYD SMEDE, OF PITTSBURGH, PENNSYLVANIA, ASSIGNOR TO WESTINGHOUSE ELECTRIC & MANUFACTURING COMPANY, A CORPORATION OF PENNSYLVANIA

ANODE OF CARBONIZED IRON OR THE LIKE

Application filed October 11, 1927. Serial No. 225,460.

My invention relates to improvements in the anodes of space-current discharge devices, and it has particular relation to means for preventing back-firing.

There are only four of the known common metals which are suitable for mercury rectifiers and are not readily attacked by mercury vapor, such metals being iron, cobalt, nickel and platinum. Platinum, being a noble metal and being prohibitive in price, may be eliminated from further consideration. Of the other three metals, iron is by far the most common material utilized for the anodes of metal-tank rectifiers.

Heretofore, attempts have been made to secure iron as free from impurities as it was possible to obtain it. Iron, as commonly made, contains impurities or inclusions, which come from the materials of the crucibles consisting of refractory earths, such as oxides of calcium and magnesium, and, to a less extent rare-earth oxides such as zirconia, cæsia, thoria, and perhaps others. Inclusions are also introduced by reason of the flux utilized, which may be lime or other materials. These inclusions may exist in the iron as separate particles or as solid solutions and they are common to both cast iron and steel. When I say iron, therefore, I do not mean to exclude steel.

In a mercury-arc rectifier, and particularly in a large metal-tank rectifier having a single pool of mercury for a cathode, and having a plurality of iron anodes, one of the chief difficulties encountered during the operation of the device is back-firing. As a result of considerable experience in the design and operation of mercury-vapor rectifiers, I have come to the conclusion that one of the prominent causes of back-firing is electron-emitting activity at the surface of the anodes. I have come to the conclusion that such activity results, in part, at least, from impurities or inclusions which are inevitably present in the iron. Of these inclusions, the oxides of calcium and certain of the rare-earth metals are believed to be the principal offenders.

According to my invention, the iron anodes are case hardened, or carbonized on their surfaces, as by being immersed in powdered carbon or any suitable carbonaceous gas (preferably the latter), and raised to a sufficiently high temperature. By this I do not necessarily mean that carbon particles are incorporated into the iron, as pure carbon, but that carbon atoms are incorporated, probably as carbides of iron, and carbides of the various inorganic impurities in the iron, such as calcium, magnesium, zirconium, cæsium, thorium, etc. Not all of these materials, certainly not all of the iron, are converted into carbides, but it is believed that the carbon replaces the oxygen in all of the oxides which are present at or near the surface, the degree of penetration of the action depending upon the nature and duration of the carbonizing treatment.

Carbides, in general, have low electron-emissivity, and, generally, they have reasonably good conductivity, iron carbide being a particularly good conductor. As a result of the carbonization of the anodes, therefore, I am enabled to improve the operation of even the purest iron obtainable, and I am enabled, also to utilize iron having the commercial grades of purity without harmful effects upon the operation of the rectifier.

The carbonaceous surface layer which I utilize has the further property of acting as a means for controlling the temperature of the anode and, hence, limiting the tendency to produce hot spots which might result in back-firing, as will be subsequently pointed out in connection with Fig. 3 of the drawing.

Furthermore, my invention has the very important object of preventing the occurrence of the very tenuous film of mercury, or amalgam which forms, during low-load conditions, on the iron anodes heretofore universally used in metal-tank mercury-arc rectifiers. A clean iron surface which is exposed to mercury or mercury vapor is not readily attacked, but it does amalgamate to a very slight extent, provided the iron is not too hot.

It has been observed, heretofore, that a rectifier is much better able to withstand a momentary overload after it has been running for a while at a good load, than if it had been lightly loaded. I believe that the

phenomenon just mentioned is explained by the fact that the iron anodes become heated, during their heavy-load operation, so that the film of mercury or amalgam was driven off, whereas, in the other case, the film was present. A small droplet of mercury, condensing or impinging on the anode, will not stick to the surface if it is clean, but it will stick to the film of mercury or amalgam. I believe that the back-firing is the result of the presence of such droplets of mercury, as well as the presence of the film itself.

By my invention, the iron-anode surface is covered by a carbonaceous surface which will not even slightly amalgamate and which, therefore, always keeps clean so that the occurrence of back-firing, as a result of the presence of mercury or amalgam on the anode surfaces, is altogether prevented.

As the danger of back-firing is the limiting design feature which controls the rating of the rectifier, the importance of my invention may readily be appreciated.

With the foregoing and other objects in view, my invention consists in the parts, combinations and methods hereinafter described and claimed, with reference to the accompanying drawing, wherein

Figure 1 is a cross-sectional view of a portion of a metal-tank rectifier, of a prevailing commercial design, embodying an anode of my invention.

Fig. 2 is a view, partially in elevation and partially in section, of the anode per se, and Fig. 3 is a curve diagram hereinafter referred to.

In the drawing, the numeral 3 designates the metal tank of a mercury-vapor rectifier, which may be of any usual design, except that it is provided with specially treated anodes 4, as hereinabove described. Each of the anodes 4 is provided with a carbonized surface, as indicated at 5 in Fig. 2, wherein the dots are only for illustrative purposes and do not signify the presence of carbon particles, nor do they signify the extent of penetration of the carbonizing action.

The effect of the carbonaceous surface layer 5, in controlling the temperature of the anode, is best explained with reference to Fig. 3, where the lower curve 7 shows the relation between the radiated energy and the absolute temperature, for a clean iron surface, while the upper curve 8 shows the same relation for the carbonaceous surface, which approaches the properties of black-body radiation.

Let us consider, for example, a clean, iron anode with its hottest point operating at a surface temperature of 1130° K., in a mercury-arc rectifier, as indicated at 9 in Fig. 3. The radiated energy, which corresponds substantially to the energy produced by the bombardment of charged particles impinging upon the anode, is a certain amount, as indicated by the horizontal line 10 in Fig. 3.

Let us suppose that the load is suddenly increased, even for a short time. The energy is liberated on the anode by the bombardment of the ionized particles in a relatively small area. In the equilibrium-state, this energy is radiated from a relatively large portion of the anode by reason of the heat conduction from the hottest area to the rest of the anode. Therefore, when considering sudden increases in the load, we do not consider this sudden energy increment to be radiated from the entire surface, as the sudden increase is at first effective largely in the hot spot. Hence, a relatively large increment in the energy radiated by the hot spot is produced by the sudden load, as indicated by a second horizontal line 12 in Fig. 3.

It will be observed that the temperature of the iron anode will be very greatly increased, as indicated at 13, because of the small slope of the curve.

If the temperature 13 of the iron anode surface, or of a hot point thereon, is of the order of 200° C. below the melting point of iron, the evaporation of the iron occurs at a sufficiently rapid rate to produce a vaporous iron atmosphere which becomes ionized and which, in turn, is pulled back into the anode, still further increasing its temperature.

If the melting point of iron is reached or exceeded, either by the process just described or by the original increment in the load which is indicated by the upper line 12, conditions are obtained in which a direct iron arc may be produced, that is, in which the iron becomes the cathode. The result is a backfire.

In the case of the upper curve 8, representing the operating conditions with my carbonized anode, two things are to be noted; first, that for the same energy radiated, the carbonized anode operates at a much lower initial temperature 15 than the pure iron anode; and second, that the same radiated energy increment (to 12) causes a much smaller increase in temperature (to 17) in the case of the carbonized anode than in the case of the pure iron anode. Even when higher anode temperatures are reached, it will be noted that the curve 8 for my anode has a much greater slope than the curve 7 for the uncarbonized iron anode, so that sudden load demands do not cause excessive temperature, thereby enormously decreasing the possibility of backfire.

The other advantages and results of my improved anode have been sufficiently well explained in the introductory remarks hereinabove.

While I have described my invention in a preferred embodiment and have explained it in accordance with a theory of operation which I now believe to be correct, I do not desire to be limited to such embodiment or

theory, but desire that the appended claims shall be given the broadest interpretation consistant with their language and the prior art.

I claim as my invention:

1. A mercury-vapor rectifier having one or more anodes made of a non-noble metal which is not readily attacked by mercury vapor, said metal having inclusions of materials having relatively great electron-emissivity, as compared to iron, at the working temperatures, in the interior of the anodes, and carbides of said inclusions at the surface.

2. A mercury-vapor rectifier having one or more anodes made of a non-noble metal which is not readily attacked by mercury vapor, said metal having inclusions consisting of carbides of materials, said materials, in their uncarbonized state, having relatively great electron-emissivity as compared to iron.

3. A mercury-vapor rectifier having one or more anodes made of a non-noble metal which is not readily attacked by mercury vapor, said metal having inclusions of refractory earth oxides in the interior of the anodes and no oxides near the surface thereof.

4. A mercury-vapor rectifier having one or more anodes made of case-hardened iron.

5. A mercury-vapor rectifier comprising an evacuated chamber in which is disposed a part made of a non-noble metal not readily attacked by mercury vapor, characterized by the fact that carbon is combined chemically with the surface material of said metal and penetrates it to an appreciable depth.

6. A mercury-vapor rectifier comprising an evacuated chamber in which is disposed a part made of a non-noble metal not readily attacked by mercury vapor, characterized by the fact that said part has a surface comprised of carbonized material including carbides of the said metal as well as carbides of surface-impurities and depth-impurities therein.

7. A mercury-vapor rectifier comprising an evacuated chamber in which is disposed a part made of a non-noble metal not readily attacked by mercury vapor, characterized by the fact that said part has a chemically combined carbonized surface that remains thereon during operation at greater current-capacities than are practicable without said carbonized surface.

8. A mercury-vapor rectifier comprising an evacuated chamber in which is disposed a part made of a non-noble metal not readily attacked by mercury vapor, characterized by the fact that said part has a chemically combined carbonized surface which remains thereon after full-load operation, the gaseous pressures in the region thereof being maintained all the while at a low value suitable for the rectifier operation.

9. A mercury-vapor rectifier comprising an evacuated chamber in which is disposed an anode made of a non-noble metal not readily attacked by mercury vapor, characterized by the fact that said anode has a chemically combined carbonized surface which remains effective after full-load operation and without excessive ionization in the anode region.

In testimony whereof, I have hereunto subscribed my name this 6th day of October, 1927.

LLOYD SMEDE.