Dec. 27, 1938. C. W. PYLE 2,141,799

BOAT

Filed Dec. 11, 1936 2 Sheets-Sheet 1

Fig. 1.

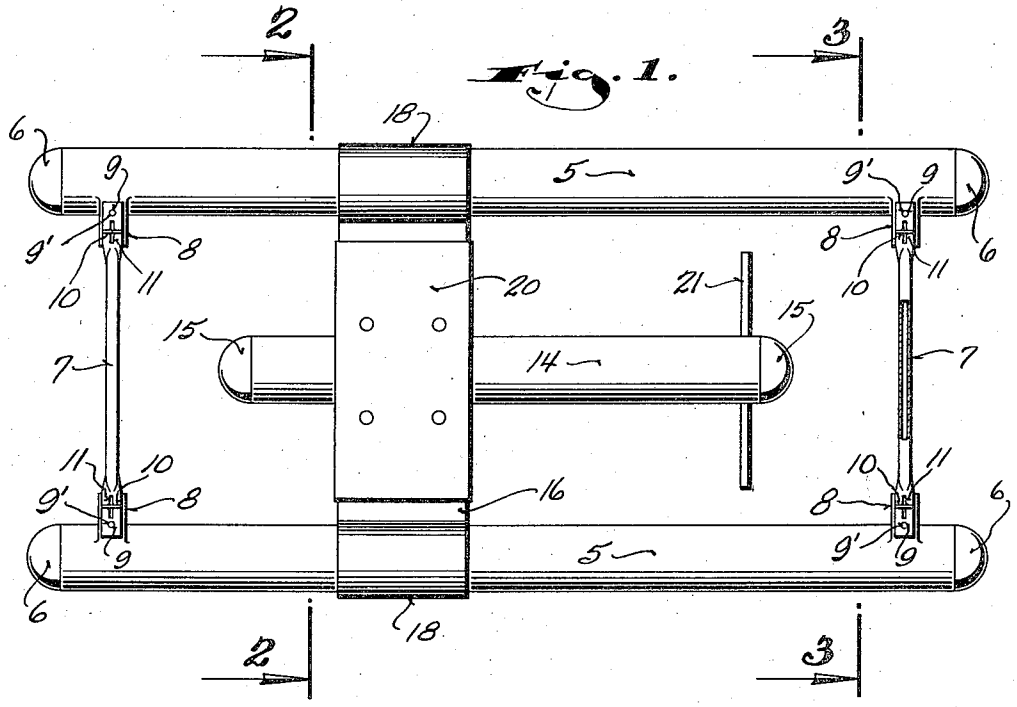

Fig. 2.

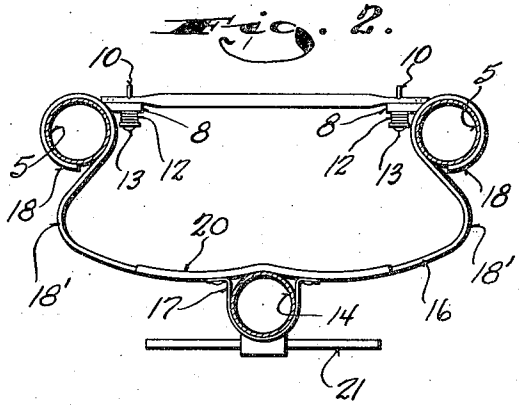

Fig. 3.

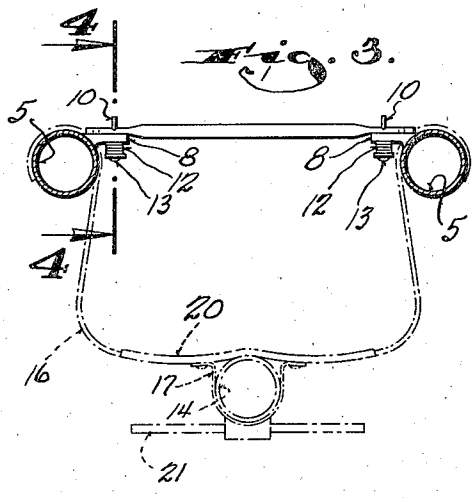

Fig. 4.

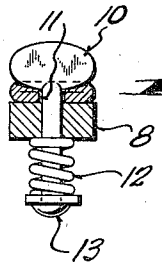

Inventor
Charles W. Pyle
By Shelton Jones
Attorney

Dec. 27, 1938. C. W. PYLE 2,141,799

BOAT

Filed Dec. 11, 1936 2 Sheets-Sheet 2

Fig. 5.

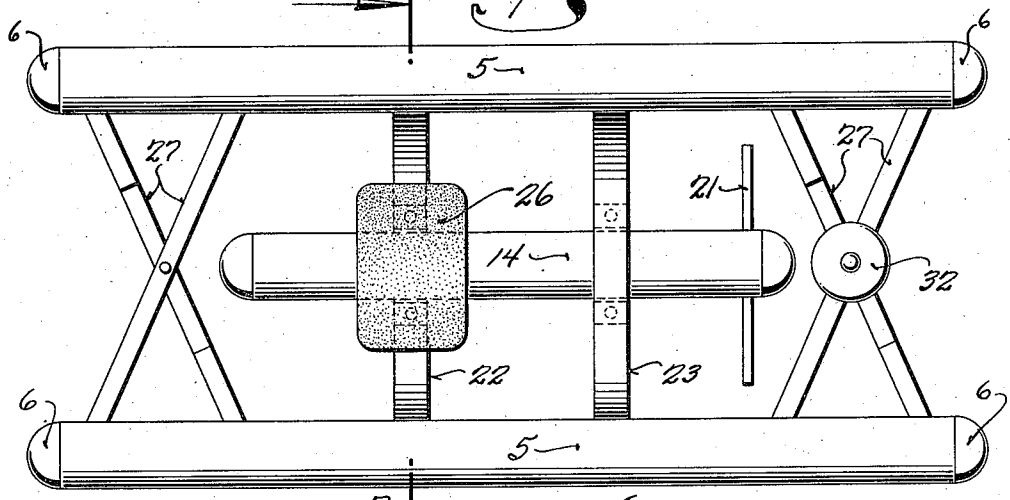

Fig. 6.

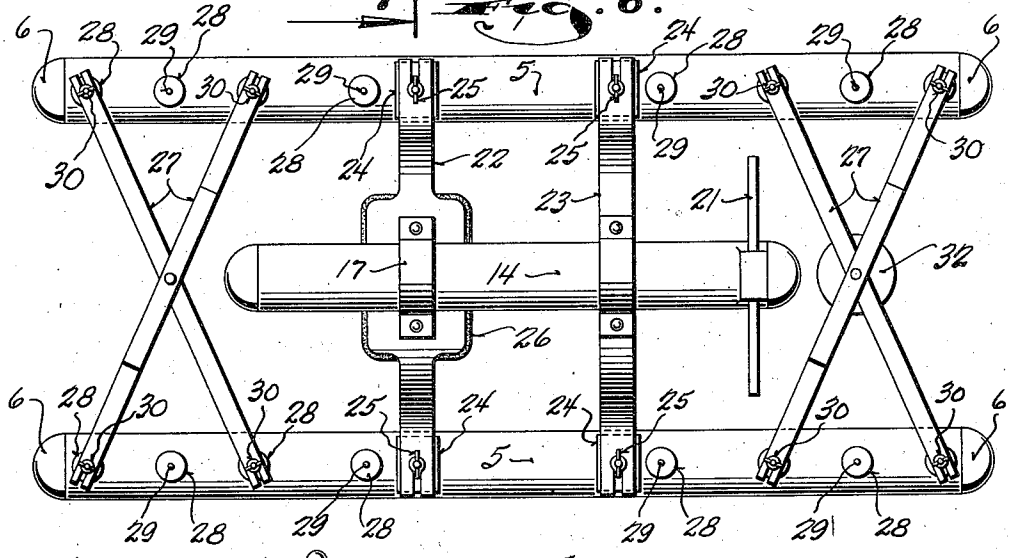

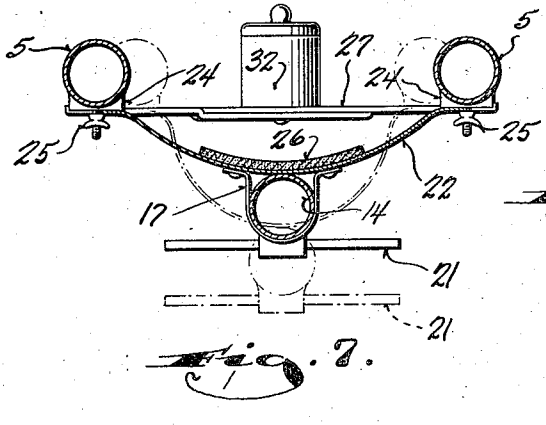

Fig. 7.

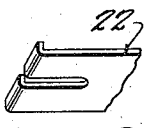

Fig. 8.

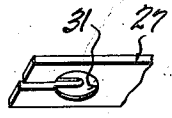

Fig. 9.

Inventor
Charles W. Pyle
By Dashiell Sutton Jones
Attorneys

Patented Dec. 27, 1938

2,141,799

UNITED STATES PATENT OFFICE

2,141,799

BOAT

Charles W. Pyle, Milwaukee, Wis.

Application December 11, 1936, Serial No. 115,328

9 Claims. (Cl. 9—1)

This invention relates to boats and refers particularly to a raft type of boat which may be used for many purposes but is intended more specifically as a pleasure boat. In general, the invention is embodied in a novel arrangement of pontoons readily detachably held assembled in a manner to produce certain desirable and advantageous results.

It is an object of the invention to provide a boat device of the character which is safe in every respect.

Another object of this invention is to provide a boat device of the character described which may be quickly knocked down and assembled to obtain the optimum in portability.

Another object of this invention is to provide a device of the character described which is made substantially entirely of metal so as to be indestructible, and which is light and readily handled either in its knocked down form or when assembled and in use.

Another and important object of this invention is to provide a boat device of the character described which is so designed that in use a portion of the natural buoyancy of the user's body is utilized.

It is also an object of this invention to provide a boat device of the character described wherein the effective buoyancy of the boat may be adjusted to a person's weight.

With the above and other objects in view which will appear as the description proceeds, this invention resides in the novel construction, combination and arrangement of parts substantially as hereinafter described and more particularly defined by the appended claims, it being understood that such changes in the precise embodiment of the herein disclosed invention may be made as come within the scope of the claims.

The accompanying drawings illustrate two complete examples of the physical embodiment of the invention constructed according to the best modes so far devised for the practical application of the principles thereof, and in which:

Figure 1 is a top view of a boat device constructed in accordance with this invention;

Figure 2 is a cross section view taken through Figure 1 on the plane of the line 2—2;

Figure 3 is a view similar to Figure 2, but showing the manner in which the position of one of the pontoons may be automatically adjusted with respect to the other pontoons;

Figure 4 is a section view taken through Figure 2 on the plane of the line 4—4;

Figure 5 is a top view illustrating a slightly modified embodiment of this invention;

Figure 6 is a bottom view thereof;

Figure 7 is a cross section view taken through Figure 5 on the plane of the line 7—7;

Figure 8 is a fragmentary perspective view illustrating a detail of the connection between the pontoons; and

Figure 9 is a view similar to Figure 8 illustrating a detail of the connection between the outer or side pontoons.

Referring particularly to the accompanying drawings in which like numerals indicate like parts throughout the several views, it will be seen that there are two side pontoons 5 of substantially equal length and cylindrical in cross section. These pontoons are preferably constructed of aluminum tubing and have their ends closed by caps 6 sweated in place.

At the opposite ends the pontoons 5 are rigidly joined by cross members 7. These cross members are readily detachably connected to the pontoons so that the pontoons may be quickly disassembled and assembled.

While the specific manner of attaching the ends of the cross members to the pontoons is subject to substantial modification, the construction illustrated has been found desirable. Accordingly, the ends of the cross members rest upon lugs 8 fixed to the pontoons.

Dowel pins 9 project up from the lugs into apertures 9' in the ends of the cross members, and the ends of the cross members are held down on the lugs by fasteners 10. The fasteners 10, as best shown in Figure 4, are somewhat in the nature of thumb screws with their heads disposed above the lugs to project through elongated openings 11 in the cross members. The stems of the fasteners project down through the lugs 8 and are yieldingly drawn down by springs 12 confined between the bottom of the lugs and heads 13 on the lower ends of the fasteners.

The top face of the end portions of the cross members has transverse notches communicating with the openings 11 to receive the heads of the fasteners when turned to operative positions, as shown in Figure 4.

To effect detachment, it is only necessary to turn the fasteners to align their heads with the openings 11.

Disposed between the side pontoons is a center pontoon 14. This center pontoon is of the same construction as the side pontoons having caps 15 closing its ends, but is shorter than the side pontoons. It is held in substantially parallel rela-

tionship with the side pontoons and a short distance beneath the side pontoons by a band-like transverse member 16.

This band-like member is formed of semi-rigid material to permit the same to be bowed and shaped as shown and to function in a manner to be described. While spring steel suitably plated to permit its use in water might be used, it has been found preferable to use either Pyrolin or Pontalite, both of which are thermo-plastic substances well known to the trade.

The band 16 is rigidly secured to the center pontoon 14 in any manner as by having a yoke 17 embracing the pontoon and secured at its ends to the band, and the ends of the band are adjustably attached to the side pontoons by being wrapped about the side pontoons as at 18.

The seat 20 is carried directly by the band 16 so that the occupant straddles the center pontoon. It is to be noted that the boat is so designed that when in use the side pontoons are but partially submerged whereas the center pontoon is wholly submerged so as to utilize all of its buoyancy, and that a substantial portion of the user's body is submerged allowing the natural buoyancy thereof to be utilized.

In its normal shape illustrated in Fig. 2, the band 16 holds the center pontoon at a minimum distance beneath the side pontoons, and the resilience of the material from which the band is formed is such that the grip of its wrapped end portions on the side pontoons is sufficiently secure to withstand the weight of a light-weight person on the seat 20 while allowing the outwardly bowed portions 18' to straighten out to an extent determined by the weight of the person.

The increased weight of a heavier person, not only completely straightens the side portions 18', but may also unwrap the end portions of the band 16 an amount depending upon his weight and permits the seat 20 and the center pontoon to descend lower into the water, permitting a greater portion of the occupant's body to be utilized for buoyancy. In this manner the unit is substantially self-adjusting as to its effective bouyancy.

Attention is directed to the fact that the band 16 and consequently the seat 20 are located nearer one end of the pontoons than the other so that in use the unit is balanced endwise, and for convenience, the front end of the center pontoon may be provided with a foot rest 21.

In the modified embodiment of the invention illustrated in Figures 5 to 9, inclusive, the arrangement of the side and center pontoons is the same as that described, but the manner in which they are connected and the desired adjustability of the center pontoon is obtained, is different.

In this instance, there are two band-like transverse supports 22 and 23 connecting the center pontoon with the side pontoons. Both are semi-rigid and are securely connected at their ends to the side pontoons.

The extreme ends of the bands are bent upwardly to engage over the outer edges of lugs 24 formed on the pontoons so that when the wing nuts 25 which clamp the bands to the pontoons, are drawn tight the bands are rigidly held against being pulled away from the side pontoons.

For convenience in assembling and disassembling the ends of the bands 22 and 23 are slotted as shown in Figure 8 for the reception of the screws upon which the wing nuts are threaded.

Inasmuch as the bands 22 and 23 are flexible and as they are rigidly attached to the side pontoons, it is possible by varying the spacing between the side pontoons to adjust the extent that the center pontoon and the seat 26 which is carried by the band 22 is disposed beneath the side pontoons.

Adjustment in the spacing between the side pontoons may be effected in steps by changing the point of attachment of the transverse braces 27 to the side pontoons. The braces are arranged diagonally in pairs, as shown, and their ends are readily detachably connected to the side pontoons at any of a number of spaced points. For this purpose the lower aspect of the side pontoons has a plurality of lugs 28 mounted thereon from which threaded studs 29 project, and the outer extremities of the cross members or braces 27 have open slots to receive these threaded studs.

Wing nuts 30, threaded on the studs, clamp the ends of the cross members to the lugs, and to guard against accidental detachment, the cross members have recesses 31 in their under surfaces to receive the wing nuts.

As in the embodiment illustrated in Figures 1 to 4, inclusive, the center pontoon preferably has a foot rest 21, and the set of cross members at the front end of the boat may be equipped with a water-tight container 32 which provides a handy receptacle for articles which it might be desirable to take along.

From the foregoing description taken in connection with the accompanying drawings, it will be readily apparent to those skilled in the art to which this invention appertains, that this invention provides a novel boat device which by reason of its lightness and ease of disassembly and assembly, is exceptionally handy and well suited for use wherever portability is an essential factor. It is also apparent that by virtue of the arrangement of the pontoons, maximum buoyancy is obtained with a minimum in overall dimensions. In this respect it is desired to note that during the application of the caps which close the ends of the pontoons, the tubes as well as the caps are heated so that the air within the pontoons is rarified to further add to the buoyancy of the device.

In assembling and disassembling the boat illustrated in Figures 1 to 4, inclusive, the curled ends 18 of the transverse band are merely sprung open sufficiently to permit their passage over the pontoons.

What I claim as my invention is:

1. A device of the character described comprising: two side pontoons; a center pontoon having less buoyancy than said side pontoons; and readily detachable means for rigidly connecting said side pontoons in substantially parallel relationship; and independent means yieldingly locating the center pontoon between and beneath the side pontoons.

2. A device of the character described comprising: two side pontoons of substantially equal length; a center pontoon of less length having less buoyancy than said side pontoons; readily detachable means rigidly connecting the side pontoons to hold the same in spaced parallel relationship; a yieldable transverse member medially attached to the center pontoon; and means for readily detachably connecting the ends of the transverse member with the side pontoons, said transverse member being bowed downwardly so as to dispose the center pontoon at a lower level than the side pontoons.

3. A device of the character described comprising: two side pontoons of substantially the same length; a center pontoon of lesser length

having less buoyancy than side pontoons; means for rigidly connecting the side pontoons to hold the same in spaced substantially parallel relationship; and a semi-rigid band having its medial portion secured to the center pontoon and its ends readily detachably joined to the side pontoons to yieldingly hold the center pontoon centrally between the side pontoons and at a lower level than said side pontoons.

4. A device of the character described comprising: two side pontoons of substantially the same length; a shorter center pontoon; cross members rigidly joining the side pontoons to hold the same in spaced substantially parallel relationship; and a semi-rigid band having its medial portion attached to the center pontoon and its ends wrapped about the side pontoons to hold the center pontoon substantially centrally between and beneath the side pontoons, said semi-rigid band being formed of material having considerable resilience so that its end portions frictionally grip the side pontoons to yieldingly hold the center pontoon in a predetermined position with respect to the side pontoons against the imposition of weight on the center pontoon up to a predetermined maximum and to thereafter yield and allow the center pontoon to descend further into the water.

5. A device of the character described comprising: two substantially cylindrical side pontoons of substantially the same length; a shorter center pontoon having less buoyancy than said side pontoons; readily detachable means for holding the side pontoons in substantially parallel spaced relationship; a member centrally attached to the center pontoon and having its ends frictionally engaged with the side pontoons for adjustably holding the center pontoon between and beneath the side pontoons, said supporting member and the center pontoon providing a seat; and the distance said center pontoon is disposed beneath the side pontoons being variable in accordance with the weight applied on the seat.

6. A device of the character described comprising: two pontoons of substantially the same length; a shorter center pontoon having less buoyancy than said other pontoons; means for rigidly joining the side pontoons to hold the same in spaced substantially parallel relationship; and an automatically adjustable connection between the center pontoon and said side pontoons for holding the center pontoon between the side pontoons at a variable depth beneath said side pontoons.

7. A device of the character described comprising: two pontoons of substantially the same length; a shorter center pontoon having less buoyancy than said other pontoons; means for rigidly joining the side pontoons to hold the same in spaced substantially parallel relationship; an automatically adjustable connection between the center pontoon and said side pontoons for holding the center pontoon between the side pontoons at a variable depth beneath said side pontoons; and a seat carried by the center pontoon.

8. A device of the character described comprising: two side pontoons; a center pontoon shorter and less buoyant than the side pontoons; adjustable means for connecting the side pontoons to hold the same in spaced substantially parallel relationship; a semi-rigid member connected to the center pontoon at its medial portion and having its ends attached to the side pontoons to hold the center pontoon between and beneath the side pontoons; and a seat carried by the center pontoon to be wholly submerged when the side pontoons are afloat; said member being sufficiently flexible to permit adjustment of the spacing between the side pontoons while said semi-rigid member is connected thereto so that the distance the center pontoon and seat are disposed beneath the side pontoons is adjustable by increasing and decreasing the spacing between the side pontoons.

9. A device of the character described comprising: two elongated side pontoons of substantially the same length; a third shorter pontoon having less buoyancy than said side pontoons; means rigidly connecting the side pontoons in spaced substantially parallel relationship; a seat carried by the third pontoon; and means mounting said third pontoon and the seat from the other two pontoons for automatic adjustment between and beneath, and independently of the other two pontoons.

CHARLES W. PYLE.