**PCT** WORLD INTELLECTUAL PROPERTY ORGANIZATION
International Bureau

INTERNATIONAL APPLICATION PUBLISHED UNDER THE PATENT COOPERATION TREATY (PCT)

(51) International Patent Classification 6 :
G06F 17/60, G07F 7/02, 7/04

A1

(11) International Publication Number: **WO 98/55952**

(43) International Publication Date: 10 December 1998 (10.12.98)

(21) International Application Number: PCT/US98/11160

(22) International Filing Date: 3 June 1998 (03.06.98)

(30) Priority Data:

| | | |
|---|---|---|
| 08/868,247 | 3 June 1997 (03.06.97) | US |
| 08/946,304 | 7 October 1997 (07.10.97) | US |

(63) Related by Continuation (CON) or Continuation-in-Part (CIP) to Earlier Application
US 08/946,304 (CIP)
Filed on 7 October 1997 (07.10.97)

(71) Applicant *(for all designated States except US)*: GARY-WILLIAMS ENERGY CORPORATION [US/US]; Suite 5300, 370 17th Street, Denver, CO 80202-5653 (US).

(72) Inventors; and

(75) Inventors/Applicants *(for US only)*: KUROWSKI, Michael [US/US]; 8074 South Zephyr Way, Littleton, CO 80123 (US). BRUSKOTTER, Thomas, P. [US/US]; 9597 East Orchard Drive, Englewood, CO 80111 (US). SWAPP, Edward, M. [US/US]; 5651 South Lima Street, Englewood, CO 80111 (US).

(74) Agents: FISCHMANN, Kent, A. et al.; Holme Roberts & Owen LLP, Suite 4100, 1700 Lincoln Street, Denver, CO 80203-4541 (US).

(81) Designated States: AL, AM, AT, AU, AZ, BA, BB, BG, BR, BY, CA, CH, CN, CU, CZ, DE, DK, EE, ES, FI, GB, GE, GH, GM, GW, HU, ID, IL, IS, JP, KE, KG, KP, KR, KZ, LC, LK, LR, LS, LT, LU, LV, MD, MG, MK, MN, MW, MX, NO, NZ, PL, PT, RO, RU, SD, SE, SG, SI, SK, SL, TJ, TM, TR, TT, UA, UG, US, UZ, VN, YU, ZW, ARIPO patent (GH, GM, KE, LS, MW, SD, SZ, UG, ZW), Eurasian patent (AM, AZ, BY, KG, KZ, MD, RU, TJ, TM), European patent (AT, BE, CH, CY, DE, DK, ES, FI, FR, GB, GR, IE, IT, LU, MC, NL, PT, SE), OAPI patent (BF, BJ, CF, CG, CI, CM, GA, GN, ML, MR, NE, SN, TD, TG).

**Published**
*With international search report.*
*Before the expiration of the time limit for amending the claims and to be republished in the event of the receipt of amendments.*

(54) Title: AUTOMATED FILLING STATION WITH CHANGE DISPENSER

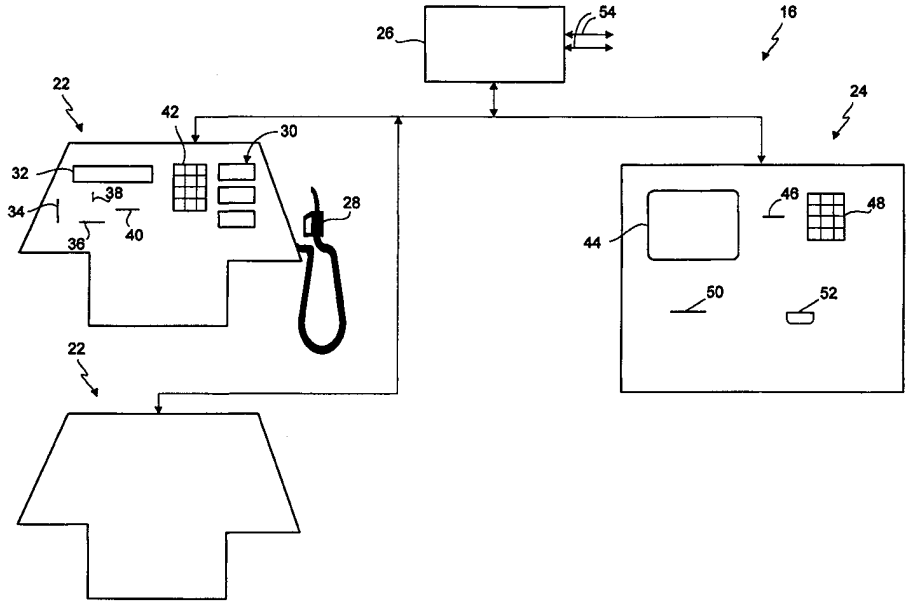


(57) Abstract

The automated filling station system of the present invention allows customers to obtain change in currency at the time of purchase, thereby accommodating cash customers as well as credit customers, and one-time customers as well as returning customers. In one embodiment, the system is implemented as a network (10) of filling stations (16) that report to a remote host computer (12). Each filling station (16) has a number of fuel pump systems (22) and a change dispenser system (24). Upon completion of a fueling transaction, a code is provided to a customer at a fuel pump system (22). The customer can enter the code to receive cash at the change dispenser (24) or can use the code for credit towards a subsequent fuel purchase within the network (10).

*FOR THE PURPOSES OF INFORMATION ONLY*

Codes used to identify States party to the PCT on the front pages of pamphlets publishing international applications under the PCT.

| | | | | | | | |
|---|---|---|---|---|---|---|---|
| **AL** | Albania | **ES** | Spain | **LS** | Lesotho | **SI** | Slovenia |
| **AM** | Armenia | **FI** | Finland | **LT** | Lithuania | **SK** | Slovakia |
| **AT** | Austria | **FR** | France | **LU** | Luxembourg | **SN** | Senegal |
| **AU** | Australia | **GA** | Gabon | **LV** | Latvia | **SZ** | Swaziland |
| **AZ** | Azerbaijan | **GB** | United Kingdom | **MC** | Monaco | **TD** | Chad |
| **BA** | Bosnia and Herzegovina | **GE** | Georgia | **MD** | Republic of Moldova | **TG** | Togo |
| **BB** | Barbados | **GH** | Ghana | **MG** | Madagascar | **TJ** | Tajikistan |
| **BE** | Belgium | **GN** | Guinea | **MK** | The former Yugoslav Republic of Macedonia | **TM** | Turkmenistan |
| **BF** | Burkina Faso | **GR** | Greece | | | **TR** | Turkey |
| **BG** | Bulgaria | **HU** | Hungary | **ML** | Mali | **TT** | Trinidad and Tobago |
| **BJ** | Benin | **IE** | Ireland | **MN** | Mongolia | **UA** | Ukraine |
| **BR** | Brazil | **IL** | Israel | **MR** | Mauritania | **UG** | Uganda |
| **BY** | Belarus | **IS** | Iceland | **MW** | Malawi | **US** | United States of America |
| **CA** | Canada | **IT** | Italy | **MX** | Mexico | **UZ** | Uzbekistan |
| **CF** | Central African Republic | **JP** | Japan | **NE** | Niger | **VN** | Viet Nam |
| **CG** | Congo | **KE** | Kenya | **NL** | Netherlands | **YU** | Yugoslavia |
| **CH** | Switzerland | **KG** | Kyrgyzstan | **NO** | Norway | **ZW** | Zimbabwe |
| **CI** | Côte d'Ivoire | **KP** | Democratic People's Republic of Korea | **NZ** | New Zealand | | |
| **CM** | Cameroon | | | **PL** | Poland | | |
| **CN** | China | **KR** | Republic of Korea | **PT** | Portugal | | |
| **CU** | Cuba | **KZ** | Kazakstan | **RO** | Romania | | |
| **CZ** | Czech Republic | **LC** | Saint Lucia | **RU** | Russian Federation | | |
| **DE** | Germany | **LI** | Liechtenstein | **SD** | Sudan | | |
| **DK** | Denmark | **LK** | Sri Lanka | **SE** | Sweden | | |
| **EE** | Estonia | **LR** | Liberia | **SG** | Singapore | | |

# AUTOMATED FILLING STATION WITH CHANGE DISPENSER

## FIELD OF THE INVENTION

The present invention relates in general to the operation of filling stations, i.e., retail outlets for the sale of gasoline, diesel or other fuel. In particular, the present invention relates to a method and apparatus for automating a filling station to facilitate remote operation and payment in forms including cash payment.

## BACKGROUND OF THE INVENTION

Increasing automation of filling stations offers a number of potential advantages including customer convenience, reduced labor and risk to personnel, and lower prices. Customer convenience may be enhanced due to longer hours of operation, more service sites and reduced transaction times. In addition to the advantages of reduced personnel and working hours, automation of filling stations improves personnel safety by reducing cash handling. Reduced operating costs also benefit consumers through lower prices. For all of these reasons, the industry has long sought ways to increase filling station automation.

One form of automation that has gained widespread acceptance is the ability to pay at the pump using credit or debit cards. Typically, a card reader and a monitor are provided at the pump. The monitor prompts the customer to initiate a transaction by inserting a card into the card reader. Upon reading the card, the pump system accesses a card approval service, e.g., the BUYPASS, PAYPOINT or other credit card authorization network, in order to obtain card approval for a selected approval amount. The approval amount does not necessarily accurately reflect the subsequent fueling transaction amount. If approval is obtained, the pump system is enabled and the customer may proceed with fueling. Alternatively, where available, so-called smart card systems may allow for payment approval without accessing an external approval service.

Another type of system that is in limited use allows for cash payments. A difficulty associated with cash payments is that customers often desire to fill their tanks and therefore do not know the transaction amount ahead of time. Other customers may wish to receive change to have available for other reasons. One existing system addresses this problem by providing credit vouchers in the event that a balance remains upon

completion of the fueling process. In this manner, the customer can pay in cash in an amount sufficient to cover a fill-up. When the fueling process is complete, the credit voucher system issues a voucher that is coded, e.g., with a six digit code, to indicate a balance owed to the customer as change. On a subsequent visit, the customer can enter the code into a keypad of the pump system to receive credit corresponding to the amount of the previously unused payment or balance.

Although existing systems have benefited the industry and some consumers and have achieved significant success with respect to certain segments of the market, the present invention addresses various needs that remain to be satisfied.

## SUMMARY OF THE INVENTION

It has been recognized that existing automated filling station systems do not address the needs of a range of consumers. In this regard, credit card based pay-at-the-pump systems do not accommodate customers who do not have or do not wish to use credit cards. In addition, the increased transaction costs associated with credit cards are reflected in higher prices for credit card customers or all customers. Credit voucher systems may be convenient for returning customers but are unattractive to customers who are only transiently present in a service area (e.g., interstate traffic), and to customers who would prefer not to be responsible for keeping track of vouchers or who would otherwise prefer not to be limited to returning to the same vendor.

The present invention is directed to an automated filling station system that accommodates the needs of customers including cash customers by providing change in the form of currency. The system encompasses a process and corresponding structure involving, inter alia: providing a pump system for dispensing fuel including a payment processor for receiving payments from customers and controlling operation of the pump system in response to such payments; receiving a payment from a customer in a customer selected amount at the pump system; monitoring a fueling process by the customer to identify a completion of the process (e.g., returning the fuel nozzle to its hanger or turning the pump off) and determining an amount due associated with the fueling process; comparing the customer selected payment amount to the amount due to determine any balance due to the customer in connection with the fueling process; providing a change

dispenser for dispensing change in the form of currency (e.g., bills and/or coins); and controlling operation of the change dispenser to provide change in currency to a customer based on the determined balance due to the customer. The pump system is preferably capable of receiving payment in various forms including credit and debit cards or the like, cash and previously issued tickets or credit vouchers (for the convenience of returning customers). The pump system may therefore include a magnetic or other card reader, bill and coin slots, and/or a credit voucher slot and will typically include at least a card reader and bill slot. The change dispenser, which may be provided at the pump or a separate location, preferably provides change in multiple denominations, e.g., some or all of United States ten dollar bills, five dollar bills, one dollar bills, quarters, dimes, nickels and pennies. A system is thus provided that accommodates cash customers as well as credit customers, and one-time customers as well as returning customers.

According to one aspect of the present invention, operation of the change dispenser is controlled based on code information. In particular, the automated filling station system includes logic (e.g., hardware, firmware and/or software) for generating transaction specific codes (e.g., numeric or alphanumeric) and associating particular codes with particular transactions to indicate a balance due in connection with the transaction. For example, upon receiving a "fueling complete" signal from a pump, the logic may obtain/retrieve the customer-selected payment amount and the transaction amount, compare these amounts to determine a balance due, generate a random or selected string of characters or password to serve as a code, create a file or the like in memory (e.g., computer memory, buffer storage and/or cache storage) relating the code to the determined balance due, and transmitting the coded balance information to, or otherwise making the coded balance information available to, the change dispenser. The logic is preferably embodied in software so as to allow on-site or remote access without hardware replacement or modification.

The balance code can be, for example, embedded in a machine readable ticket, displayed to the customer on a monitor, or printed on a receipt. The change dispenser includes a code processor and a customer input device such as a ticket slot, keyboard or the like. The code processor receives a code from the customer via the customer input device, and the dispenser dispenses change to the customer based on the code and coded

balance information stored in a database. This coded control of the change dispenser allows customers to choose between cashing in any balance due or saving the balance for application towards a subsequent fueling transaction, and also provides improved filling station configuration and servicing options.

According to another aspect of the present invention, a centralized change dispenser is associated or networked with multiple (two or more) pump systems via a control system. The control system generates coded balance information for particular transactions as described above and makes the coded balance information available to the change dispenser. The pump systems provide corresponding codes to customers who are due a balance. If change is desired, as opposed to credit towards a future transaction, the customer approaches the centralized change dispenser from any of the pump systems and enters the transaction-specific code. The change dispenser is able to dispense change to customers from each of the pump systems based on the coded balance information by virtue of the networked relationship.

In a related aspect of the present invention, the filling station and its controller may be networked, in turn, with other filling stations and a remotely located computer center (e.g., a remote host computer controllable by administrative personnel). In this manner, operation of a networked system of automated filling stations may be greatly simplified. As may be appreciated, the networking of the filling stations facilitates tracking and management of servicing of the pump systems (e.g., refueling scheduling) and of the change machines (e.g., addressing malfunctions and removing and resupplying currency). In this regard, the remote computer center may be networked to communicate with a service administrator that maintains the pump systems and/or change dispensers. Further, the controllers may be configured to store data including fuel pumped amounts and currency received and currency dispensed amounts. This data may be periodically (e.g., daily, weekly, monthly) communicated or downloaded to the remote computer center to be used to plan maintenance and calculate profitability of each filling station. As may be appreciated, networking may be accomplished through various methods, such as the use of telecommunication systems and/or the Internet.

A further benefit of networking the filling stations is that reprogramming to change certain system parameters related to code validation and termination and the like

is simplified. For example, fuel codes may be quickly and remotely verified and/or periodically changed at the remote computer center without having personnel traveling to each filling station. Similarly, fuel prices may be remotely changed by the remote computer center and transmitted to the controllers at each filling station for display (e.g., at the pump system for customer viewing) and for calculating transaction amounts. As can be appreciated, remote control of fuel prices is important as prices may fluctuate station to station based on location and periodically at the same station. Further regarding fuel prices, the controller at each filling station may be interconnected with any display systems (e.g., automated billboards) associated with the filling station to allow these displays to be remotely changed to reflect current fuel prices.

In a further related aspect of the present invention, each filling station may include an alarm system for monitoring the physical integrity of the change dispenser and/or the pump systems. The alarm system may be designed to monitor these components for problems due to theft, vandalism, and other occurrences that breach physical integrity. As can be appreciated, it may be desirable that the alarm system communicate current status and emergency information to the networked remote computer center via the controller of each filling station. In this regard, the present invention recognizes the importance of interconnecting (e.g., through the Internet or telecommunication systems) the remote computer center with an emergency response center which would address serious problems such as theft. As may be appreciated, the emergency response center may include, for example, a security service, employer managed response personnel, and public law enforcement. In this manner, a single remote computer center may monitor many networked filling stations against theft or other damage that may detrimentally effect operation of an automated filling station.

In still another related aspect of the present invention, each filling station may include a dedicated communication system for use by customers. In this manner, customers may direct operational problems to the remote computer center for prompt resolution. One problem associated with automated filling stations is that when equipment malfunctions (e.g., currency or credit vouchers may jam in the pump systems or change dispensers) there are no service personnel on site to resolve the problem. With a dedicated communication system, a customer that experiences problems, such as a

currency jam at the pump system bill acceptor or change dispenser that results in incorrect change being dispensed or no fuel being dispensed, may communicate this problem to the remote computer center. The remote computer center may resolve the problem promptly by determining via a bill jam or unit malfunction alarm and then, if substantiated, issuing a change back code corresponding to a refund amount. As may be appreciated, the change back code may take various forms, including a credit voucher, a fuel authorization code, and currency, all of which may be dispensed from the change dispenser upon receiving a code from the customer. In this regard, the communication system may include, for example, a keyboard at the change dispenser that communicates with the remote computer center via the Internet, a telephone system operable through a direct line to the computer center, or a public telephone with a free access number provided. Upon receiving a customer's communication, the remote computer center may verify the existence of the problem (e.g., the customer has a proper balance code or the like) and then either transmit a new balance or refund code for use in the change dispenser.

The automated filling station system of the present invention thus accommodates cash customers as well as credit customers and one-time customers as well as returning customers, and thereby more fully realizes the potential benefits of automated filling stations. The invention also simplifies filling station servicing and remote access and control of automated filling stations.

## BRIEF DESCRIPTION OF THE DRAWINGS

For a more complete understanding of the present invention and further advantages thereof, reference is now made to the following detailed description taken in conjunction with the drawings in which:

Figure 1 is a schematic diagram of an automated filling station network in accordance with the present invention;

Figure 2 is a schematic diagram showing the components at an individual filling station site of the network of Figure 1;

Figure 3 is a flow chart illustrating a pump system related process according to the present invention;

Figure 4 is a flow chart illustrating a change dispenser system related process according to the present invention;

Figure 5 is a chart outlining various functions and implementation options of the network of Figure 1; and

Figure 6 is a schematic diagram of an automated filling station network in accordance with the present invention.

## DETAILED DESCRIPTION OF THE INVENTION

In the following description, the invention is set forth in the context of a particular automated filling station environment. It will be appreciated that certain aspects of the present invention are applicable to other environments. The automated filling station implementation of the present invention can be a single site system or a network of filling stations, can be a stand-alone filling station or associated with a convenience store, supermarket, department store, discount store, etc., and can be manned or unmanned. Numerous other environmental factors can be varied as desired. For the sake of completeness, the illustrative embodiment of the invention described below is set forth in the context of a network of filling stations, some of which are associated with stores.

Referring to Fig.1, an automated filling station network is generally identified by the reference numeral 10. Generally, the network 10 includes a number of filling station sites 16 that communicate with a remote host computer 12, via a public or private communications network 14, such as the Internet. Although the illustrated network 10 is shown as including only two filling station sites 16, it will be appreciated that any number of filling stations may be included in the network 10.

Each filling station site 16 includes a number of fuel pump systems 22, at least one change dispenser system 24, and a site controller 26. Again, although the illustrated filling station sites 16 are shown as including only two fuel pump systems 22, each site 16 can include any number of fuel pump systems 22. Similarly, although a single change dispenser 24 per site 16 is preferred for ease of maintenance, any number of change dispensers 24 per site 16 can be included as desired, and the change dispenser can be incorporated into the individual pump systems rather than provided separately as shown. The site controller 26 implements logic as will be described below. The logic can be

embodied in hardware, firmware or software. Preferably, the logic is embodied in software so as to facilitate remote or onsite revisions and updates without changing or modifying hardware. A number of interfaces are also shown at each filling station site 16. Such interfaces can include a store data system interface 18, and maintenance and restocking interfaces 20. The store data system interface 18 is particularly applicable where the filling station site 16 is associated with a convenience, discount or other store. The interface 18, which may be any suitable network connection, allows the store data system and the network data system to exchange data for inventory, accounting and other purposes. The maintenance and restocking interfaces 20, which may include a user interface device such as a keyboard and a scanner for reading identification cards, are provided for tracking refueling of the filling station site 16, restocking of the change dispenser 24, onsite administrative updates, and other purposes. Additional details of a filling station site 16 are shown in Figure 2. The illustrated pump system 22 can receive payment in a variety of forms including cash, credit or debit cards, and previously issued system credit, i.e., by way of a balance code entered on a keyboard or, optionally, a coded voucher. In this regard, the pump system 22 includes some or all of a card reader 34, such as a conventional magnetic card swiper, a bill acceptor 36, an optional coin acceptor 38, and an optional voucher reader 40. Typically, the pump system 22 will include at least a card swiper and a bill acceptor. The voucher reader 40, if provided, receives and processes vouchers containing machine readable code information. For example, the machine readable code information may be provided in the form of a bar code, magnetic coding or other machine readable format. The pump system 22 also includes a message display 32 such a monochromatic dot matrix display system for displaying various messages such as instructions, prompts, advertisements, and error messages. A user input device such as a key pad 42 may be also provided for various user input functions such as (optionally) selecting payment type, entering a security or prior payment balance code, and approving payment amounts. The pump system 22 also includes conventional pump components such as a fuel dispenser nozzle 28 and a pump display 30 for displaying a running transaction amount, price information and fuel amount.

The illustrated change dispenser system 24 receives code information input by a customer, retrieves associated coded balance information from the site controller 26 and

dispenses change in the form of bills and coins. The system 24 which may be, for example, a cash machine manufactured by Diebold, Inc. of Canton, Ohio, includes: a dispenser display 44 for displaying instructions, prompts, advertisements and the like; voucher reader 46, if provided, receives and processes vouchers containing machine readable code information; a user input device such as a key pad 48 for manually inputting code information, identification information or the like; a bill dispenser 50 providing change in the form of bills such as some or all of United States ten dollar bills, five dollar bills and one dollar bills; and a coin dispenser 52 for dispensing change in the form of coins such as some or all of quarters, dimes, nickels and pennies. For simplicity, the change dispenser system 24 may use only a smaller set of denominations. For example, dimes may be eliminated as they can be readily replaced by nickels. The pump system 22 and the change dispenser system 24 are interconnected to form a network. The network also includes the site controller 26 that performs a number of functions including monitoring pump system operations, generating and recording codes together with associated balances, receiving code inputs from the cash dispenser system 24, and controlling operation of the cash dispenser system 24 to provide change. The site controller 26 also includes two communication ports, generally identified by arrows 54, such as for modems, alarm paging, or linking with change back machines. The communication ports allow the site controller 26 to communicate with external card authorization systems, such as the BUYPASS, PAYPOINT or other credit card authorization network, and the host computer 12 (Fig. 1) of the automated filling station network 10. The site controller 26 of the illustrated embodiment is a computer and can be any suitable processing system such as, for example, an Intel PENTIUM based IBM compatible system with at least a 1 GB hard drive and 16 MB of RAM. The site controller 26 may run Microsoft Windows 95 or another operating system.

Various functions that are executed by the site controller 26 are outlined in the flow diagrams of Figs. 3 and 4. More specifically, Fig. 3 illustrates a number of pump system related processes and Fig. 4 illustrates various cash dispenser system related processes.

Referring to Fig. 3, a pump system may be programmed to continuously or periodically display (56) a payment prompt such as "select payment type" or "insert

payment" between transactions. A customer initiates a transaction by inserting a card, cash, or (where applicable) a credit voucher. The controller receives (58) a corresponding transaction initiation signal and the pump system receives and credits (60) payment. Payment is typically received at the pump system by receiving currency through the bill acceptor or by obtaining authorization of a credit or debit card in a specified amount (even though only the transaction amount may eventually be debited from the corresponding card account). Further processing of the transaction depends on whether the customer has selected cash or credit (62). For cash payments, the control system monitors the amount of currency received through the bill acceptor and records (64) the total payment amount. For credit payments, the control system contacts (66) an authorization service, waits for a response and receives (68) an authorization signal. If the card is not approved, the control system generates (72) an error message which is displayed to the customer. If the card is authorized, or if the customer pays in cash, then the pump is enabled (76) and the fueling process can begin.

Alternatively, the pump may be enabled prior to obtaining authorization as indicated in phantom on Fig. 3. If authorization is subsequently denied, then the control system can disable (74) the pump after fueling has been initiated. It will be appreciated that such immediate pump enablement entails a risk of loss by the fuel vendor. However, it is anticipated that any such losses will be minimal due to the speed of operation of the authorization system. Any such losses may be justified by the improved customer convenience and customer throughput resulting from reduced authorization delays.

During the fueling process the control system monitors (78) the fueling process to detect (80) a fueling complete signal. Depending upon the type of pump system employed, such a fueling complete signal may be generated in response to hanging up the pump nozzle or in response to manually turning the pump off by flipping a pump lever. Upon detecting the fueling complete signal, the control system communicates with the pump system to determine the transaction amount and compares (82) the payment amount to the transaction amount to determine whether a balance is due (84). If no balance is due, the control system will only generate a receipt (86) if requested by a customer, and the pump system related process is complete. On the other hand, if a balance is due, the

control system generates (88) a code and associates the code with the balance due. The code can be generated by any suitable software such as random or modified random number generator (excluding previously used codes), or custom software for selecting predetermined codes from a code database. The control system relates the code to the corresponding balance and stores the code and balance in a coded balance data base that is indexed by code. In this manner, the coded balance information can be transmitted (92) to the change machine in response to a code input by the user.

The code can be provided (90) to the customer in any suitable form. For example, the code can be printed on the transaction receipt that is reported to the customer. Alternatively, a code such as a password or character string can be displayed to the customer on the pump system monitor. As a further alternative, it is anticipated that the pump system may be provided with the capability to issue a ticket or voucher to the customer that includes optically or magnetically encoded information corresponding to a numeric or alphanumeric code.

Once the customer has received the code, the customer may either retain the code and receive credit for the balance due in a subsequent fueling transaction at a site within the automated filling station network, or the customer may proceed with the code to the change dispenser system to receive change in the form of currency. Figure 4 illustrates the change dispenser system related process. The process can be implemented by the customer in response to instructions and/or prompts displayed on the change dispenser system monitor. Upon approaching the change dispenser system, the customer initiates the change dispenser system process by entering the code supplied by the pump system e.g., by entering the code manually or, where available, by inserting a machine-readable voucher. The code is transmitted to the control system by the change dispenser system. The control system receives (94) the customer code input and retrieves (96) the coded balance information which has been stored (98) by the control system in computer memory. More particularly, the coded balance information is retrieved by searching (100) through the code indexed balance information data base based on the received code. If the code is found (102) and has not expired (104), then the change dispenser system dispenses (108) change in the form of currency in the amount indicated by the coded balance information. In this regard, it will be appreciated that network operators may

desire to attach expiration dates to particular codes (e.g., 90 days after transaction date) for bookkeeping purposes. If the code is not found, or is expired, an error message is displayed (106) to the customer and the process may be restarted.

Figure 5 shows a number of functions and implementation options for the control system of the automated filling station network. These functions can be executed by the remote host computer, the site controller or other elements of the overall control system. The illustrated functions can generally be grouped into the following categories: 1) payment functions (114); 2) back office functions (116); 3) maintenance functions (118); 4) remote access functions (120); 5) compatibility functions (122); and 6) security functions (124). The payment functions (114) include recognizing and crediting customer payments received in the form of cash (114a), a credit card (114b), balance codes (114c) manually entered or encoded into credit vouchers, and a debit card (114d). The back office functions (116) can be varied as desired depending on the filling station environment and operator preferences. In the illustrated embodiment, the back office functions implemented by the control system (112) include generating (116a) records for each transaction, storing (116b) transaction information for backup record keeping in the case of transmission failures between the filling station site and the remote host computer, reporting (116c) the transaction information (e.g., in the form of printouts) to the system administrator and providing (116d) an accounting interface between the control system and accounting programs associated with the remote host computer or a data system of a store associated with the filling station. The back office functions (116) also include providing (116e) an interface with tank monitoring equipment to track fuel inventory and generating (116f) fuel orders when fuel inventory reaches a selected level. The fuel orders can be transmitted to the host computer or directly to a supplier via a pager or computer interface.

The maintenance functions (118) include generating (118a) error alarms and tracking (118b) hardware events such as malfunctions, revisions or tampering. The error alarms may take various forms such as transmitting an error message to the host computer or paging a servicing agent. The nature of the error alarm generated may depend, for example, on the urgency of the identified error, the time of day, etc. Error messages may include some or all of the following: 1) pump off line; 2) pump paper is out; 3) pump

paper is low; 4) credit card interface is down; 5) pump not reset for next sale; 6) receipt paper jammed; 7) bill acceptor jammed; and 8) emergency shutoff activated.

The remote access function (120) allows the filling station site to be monitored and controlled via the remote host computer. These functions include retrieving (120a) transaction data, changing (120b) operating parameters such fuel prices, expiration periods for codes, prioritization of error alarms, installing (120c) system changes and upgrades by downloading codes from the remote host computer to the site controller, and polling (120d) the filling station sites and displaying the site status on a monitor associated with the remote host computer. Preferably, the site status for a given site is formatted to show all status information for a particular site on one screen. The status information can include, for example, the status of all alarm parameters.

The compatibility functions (122) ensure that the control system can communicate with various related data systems. For example, the fuel pump systems preferably employ industry standard cash acceptors and dispensers. Accordingly, the compatibility function (122) assures compliance with such standards (122a). In addition, in the case of a filling station site associated with a store, the control system may be designed for compatibility with the store's data system (122b) to exchange data for inventory and bookkeeping purposes. Similarly, the control system (112) may be programed to accept the same credit cards under the same conditions as the store.

The security functions (124) are intended to discourage improper access to the network. The security functions (124) preferably define a number of security levels or grades (124a) for controlling access to the network. For example, a fuel vendor may be allowed access for the limited purpose of monitoring fuel inventory and reporting refueling levels. A vending machine servicing agent may be allowed access to the network for the limited purpose of monitoring coin and bill supplies and restocking as necessary. The control system also preferably allows passwords to be set and changed (124b) as desired from the remote host computer. Finally, the security system may verify (124c) administrative access cards which allow access to network administers for retrieving records, upgrading systems and performing other administrative functions.

Referring to Figure 6, another embodiment of an automated filling station network 210 is shown illustrating various functions and components of the present

invention. Generally, the network 210 includes a number of filling station sites 216 that communicate with a remote computer center 212 via a public or private communications network 214. The network 210 further includes an emergency response center 217 and a service administrator 219, each in communication with the remote computer center 212. It will be appreciated that any number of these components may be included in the network 210. For example, a large number of filling station sites 216 may be controlled by a single remote computer center 212 while it may be appropriate to have a separate service administrator 219 and emergency response center 217 for each particular geographic area. Each filling station site 216 includes a number of fuel pump systems 222, an alarm system 223, at least one change dispenser system 224, at least one customer communication system 225, and a site controller 226. As described above, the site controller 226 implements logic embodied in software, firmware, and/or hardware for controlling operation of the filling station site 216.

Referring to Fig. 6, the network 210 includes a number of communication links to facilitate interaction of the various components of the network 210. During operation, a customer initiates a transaction by inserting a payment amount in the form of a card, cash, or a credit voucher at pump system 222. Pump system 222 communicates with site controller 226 which authorizes fueling, calculates a balance code at the end of fueling, and transmits the code to pump system 222 for display and/or dispensing to the customer. The customer may then enter the balance code at the change dispenser 224 which communicates with the site controller 226 and which then dispenses change to the customer based on this communication. Information or data regarding the amount of fuel pumped, the currency received at each pump system 222, and the currency dispensed by the change dispenser 224 may be stored by the site controller 226. Periodically, this information may be transmitted or downloaded to the remote computer center 212 for further processing. In this manner, the remote computer center 212 may include logic for processing this information to determine servicing schedules for each filling station sites 216 and then communicating these service schedules to the service administrator 219, thereby facilitating timely and cost effective maintenance of the filling station sites 216 within network 210. The remote computer center 212 may also process this information

to determine daily or periodic sales information (e.g., profit) for accounting and administrative purposes.

As may be appreciated, fuel prices may fluctuate periodically and may vary based upon geographic location because of competitive forces, changes in supply and demand, and other market related reasons. It may be desirable to set or establish the fuel price at each filling from the remote computer center 212 to save the cost of periodically, often daily, servicing each filling station site 216 merely to change fuel prices. In this regard, the remote computer center 212 may be operated to monitor and establish fuel prices within network 210. The remote computer center 212 may transmit a new fuel price to site controller 226 at a filling station site 216. The site controller 226 employs this new fuel price when determining transaction amounts associated with future fueling transactions. The site controller 226 also operates the pump system 222 to display the new fuel price to customers. The site controller 226 or remote computer center 212 may similarly operate any associated display systems (e.g., automated bill boards on site or offsite, such as along a highway) visible to customers at the filling station site 216 or at separate locations.

If a customer experiences difficulties in operating the pump system 222 or in obtaining change at change dispenser 224, the customer may operate customer communication system 225 to communicate with the remote computer center 212 via communications network 214. For example, customer communication system 225 may comprise a telephone located near change dispenser 224. When a change dispenser malfunctions, the customer may use the telephone of the customer communication system 225 to call (e.g., free of charge with a 1-800 number) the remote computer center 212. The remote computer center 212 may respond by transmitting a new balance or refund code to the customer for immediate or later use. As can be appreciated, the appropriateness of a refund may be verified by cross-checking the customer's original balance code (e.g., has it been previously dispensed) and/or the customer's fuel authorization code. With a refund code in hand, the customer may operate the change dispenser to obtain currency. If a continuing malfunction is experienced, the remote computer center 212 can relay this information to the service administrator 219 for correction of the problem.

The filling station site 216 further includes an alarm system 223 interconnected with the pump systems 222, the change dispenser 224, and the site controller 226. The alarm system 223 may be designed to provide continuous monitoring of the physical integrity of the pump systems 222 and the change dispenser 224 and to transmit current status and alarm signals to the site controller 226 for further processing. For example, if physical damage occurs at a change dispenser 224, the alarm system 223 transmits an alarm signal to site controller 226. Site controller 226 processes and transmits this information via communication network 214 to remote computer center 212. Remote computer center 212 receives this information, determines an appropriate alarm response, and transmits this alarm response to the emergency response center 217. In this manner, the automated, and often remotely located, filling station sites 216 can be efficiently and cost effectively monitored and maintained against physical damage that would detrimentally affect continuing operation.

As may be appreciated, the change dispenser 224 may have an integral or substantially integral alarm system 223. For example, the change dispenser 224 may be an ATM-type machine, such as that manufactured by Diebold, Inc., having an integral security system (e.g., alarm systems) that includes integral camera surveillance, electronic access locks, alarm sensors, and seismic vibration detectors. Referring to Figure 6, the alarm system 223 of the present invention may be integral to change dispenser 224 with the alarm system 223 including a sensor(s) for monitoring the physical integrity of the change dispenser 224 and communication ports for linking the alarm system 223 to a communications network 214 via site controller 226. The alarm system 223 may further include a sensor(s) placed on the pump systems 222 interconnected to the integral portion of the alarm system 223 at the change dispenser 224. In this regard, the sensor(s) of the pump systems 222 monitors physical integrity of the pump systems 222 and, specifically, of the cash receipt portions. In this manner, the alarm system 223 may be employed to transmit current status and alarm signals regarding the filling station site 216 to the remote computer center 212, which may forward alarm signals to the emergency response center 217, as appropriate. Additionally, the alarm system 223 may be directly linked (e.g., bypassing the site controller 226) to an emergency response center 217, such as a

police station or a private security service, to facilitate prompt response to any emergency signals transmitted by the alarm system 223.

The automated filling station network of the present invention provides on the spot change in the form of currency or credit voucher for use and subsequent fueling transactions as desired by the user. The network enhances customer convenience, reduces labor costs and hazards to personnel and reduces operating costs and fuel prices. The network thereby realizes many of the potential advantages of automated filling stations that have not been achieved in conventional systems.

While various implementations of the present invention have been described in detail, it is apparent that further modifications and adaptations of the invention will occur to those skilled in the art. However, it is to be expressly understood that such modifications and adaptations are within the spirit and scope of the present invention.

**WHAT IS CLAIMED IS.**

1. A method for use in operating at least one filling station, comprising the steps of:

providing at least one pump system for dispensing fuel, said pump system including a payment processor for receiving payments from customers and controlling operation of said pump system in response to said payments;

receiving a payment amount from a customer at said pump system;

first operating said payment processor to monitor a fueling process by said customer so as to identify a completion of said fueling process and determine an amount due associated with said fueling process;

second operating said payment processor to compare said payment amount to said amount due to determine any balance due to said customer in connection with said fueling process and associate a code with said balance;

providing a change dispenser system for dispensing change to customers in currency, said change dispenser system including a code processor for receiving codes and controlling operation of said change dispenser in response to said codes;

receiving said code at said change dispenser system;

employing said code processor to determine said balance due to said customer based on said received code; and

dispensing said balance to said customer in currency based on said balance as determined by said code processor.

2. A method as set forth in Claim 1, wherein said step of providing at least one pump system comprises providing a fuel pump and providing a computer operatively associated with the fuel pump.

3. A method as set forth in Claim 1, wherein said step of receiving a payment comprises receiving currency via at least one of a bill acceptor and a coin acceptor.

4. A method as set forth in Claim 1, wherein said step of receiving a payment comprises receiving a balance code via one of a keyboard and a credit voucher.

5. A method as set forth in Claim 1, wherein said step of receiving a payment comprises obtaining an authorization for one of a credit card and a debit card.

6. A method as set forth in Claim 1, wherein said step of providing a change dispenser system comprises providing a change dispenser and providing a computer operatively associated with the change dispenser.

7. A method as set forth in Claim 1, wherein said step of receiving said code comprises receiving a balance code via one of a keyboard and a coded credit voucher.

8. A method as set forth in Claim 1, wherein said step of employing said code processor comprises operating said code processor to retrieve a balance amount associated with said code from a database.

9. A method as set forth in Claim 1, wherein said step of dispensing said balance comprises dispensing bills and coins.

10. A method as set forth in Claim 1, wherein said step of providing at least one pump system comprises providing a plurality of pump systems.

11. A method as set forth in Claim 10, further comprising the step of operatively interconnecting each of said plurality of pump systems to said change dispenser system such that said change dispenser system can provide change with respect to fueling processes conducted at any of said plurality of pump systems.

12. A method as set forth in Claim 1, further comprising the step of providing a site controller at said at least one filling station and a remote host computer, interconnected to said site controller via a communications network, wherein said site controller and said remote host computer exchange information regarding operation of said filling station via said communications network.

13. A method as set forth in Claim 12, further comprising the step of interconnecting said remote host computer to a second site controller of a second filling station.

14. A method for use in operating a filling station, comprising the steps of:

providing a plurality of pump systems for pumping fuel, each of said pump systems capable of providing balance codes to customers reflecting balances due to said customers in connection with fueling transactions;

providing a change dispenser system capable of receiving said balance codes and issuing change in currency;

interconnecting each of said plurality of pump systems to said change dispenser system such that said change dispenser system can provide change in currency with respect to particular fueling transactions at any of plurality of pump systems.

15. A method as set forth in Claim 14, wherein said step of interconnecting comprises providing a site controller for receiving code information from each of said pump systems and controlling operation of said change dispenser system to provide change based on said received code information.

16. A method as set forth in Claim 14, further comprising the steps of operating said site controller to monitor a fueling process so as to determine a balance due to a customer and providing a balance code to said customer, wherein said balance code can be used to dispense currency from said change dispenser system.

17. An apparatus for use in operating a filling station having at least one fuel pump comprising:

first means, associated with said pump, for receiving payment from a customer;

second means, associated with said pump, for comparing a transaction amount associated with a fueling process by said customer to said payment amount in order to determine a balance due to said customer;

third means, associated with said second means, for receiving said determined balance and dispensing change in currency to said customer.

18. An apparatus as set forth in Claim 17, further comprising means for associating a code with said determined balance.

19. An apparatus as set forth in Claim 18, further comprising means for providing said code to said customer.

20. An apparatus as set forth in Claim 19, wherein said means for providing comprises a credit voucher dispenser.

21. An apparatus as set forth in Claim 19, wherein said third means comprises means for receiving said code from said customer.

22. A method for use in operating a filling station, comprising:

1) providing a fuel pump system for receiving payments and pumping fuel in response to said payments;

2) providing a change dispenser for dispensing change in currency;

3) receiving a payment from a customer in a customer selected amount;

4) operating a controller to:

a) monitor a fueling process by said customer to determine a transaction amount;

b) compare said transaction amount to said user selected payment amount to determine a balance; and

c) communicating said balance to said change dispenser; and

5) using said change dispenser to dispense change to said customer based on said communicated balance.

23. A method as set forth in Claim 22, wherein said step of providing a change dispenser comprises providing said change dispenser at a location separate from said fuel pump system at said filling station.

24. A method for use in operating a plurality of filling stations, comprising the steps of:

providing at least one pump system for dispensing fuel at each of said filling stations, said pump system including a payment processor for receiving payments from customers and controlling operation of said pump system in response to said payments;

providing at least one change dispenser system for dispensing change to said customers in currency at each of said filling stations, said change dispenser system including a code processor for receiving codes from said customers and controlling operation of said change dispenser system;

providing a site controller at each of said filling stations, said site controller being in communication with each of said payment processors and each of said code processors at said each of said filling stations;

providing a remote computer center interconnected via a communications network to each of said site controllers, wherein said remote host computer is operable to exchange operating information with said each of said site controllers via said communications network;

receiving a payment amount from a customer at a particular payment processor of one of said at least one pump systems at one of said filling stations;

first operating a particular site controller in communication with said particular payment processor to authorize a fueling process by said customer and to monitor said fueling process so as to identify a completion of said fueling process and determine an amount due associated with said fueling process;

second operating said particular site controller to compare said payment amount to said amount due to determine any balance due to said customer in connection with said fueling process and associate a code with said balance;

receiving said code from said customer at a change dispenser system in communication with said particular site controller;

employing a code processor of said change dispenser system to transmit said received code to said site controller and to receive from said particular site controller said balance due to said customer as determined by said site controller based on said transmitted code; and

dispensing from said change dispenser system said balance to said customer in currency based on said balance received by said code processor from said site controller.

25. A method as set forth in Claim 24, further comprising the step of providing a customer communication system interconnecting customers to said remote computer center whereby said customers and said remote computer center exchange information regarding operation of said at least one pump system and said at least one change dispenser system.

26. A method as set forth in Claim 25, further comprising the step of employing said remote computer center to operate, via said particular site controller, said change dispenser system so as to dispense to a customer a refund amount in the form of one of a credit voucher, a fuel authorization code, and an amount of currency, said refund amount being based on operating information regarding said fueling process received by said remote computer center from said customer via said customer communication system.

27. A method as set forth in Claim 24, further comprising the step of providing an alarm system, at each of said filling stations, including a means for monitoring the physical integrity of each of said at least one change dispenser systems,

said alarm system being capable of transmitting an alarm signal to said remote computer center for processing.

28. A method as set forth in Claim 27, wherein said alarm system includes a means for monitoring the physical integrity of said at least one pump system.

29. A method as set forth in Claim 27, further comprising the steps of receiving, from an alarm system at a particular filling station, an alarm signal at said remote computer center and operating said remote computer center to determine an alarm response based on said received alarm signal and to transmit said determined alarm response to an emergency response administrator.

30. A method as set forth in Claim 24, wherein said amount due is determinable by said particular site controller at least partially based on a variable fuel price displayable to said customer, wherein said remote computer center is operable to remotely establish said variable fuel price.

31. A method as set forth in Claim 30, wherein said variable fuel price is displayable on a display system at each of said filling stations, said display system being at least partially observable by customers at a location separate from said each of said filling stations.

32. A method as set forth in Claim 24, wherein said particular site controller is capable of receiving and storing a fuel pumped amount and a currency received amount associated with said fueling process, and further comprising the step of operating said particular site controller to transmit said fuel pumped and currency received amounts to said remote computer center.

33. A method as set forth in Claim 32, further comprising the step of operating said remote computer center to determine a service schedule for each of said filling stations based at least partially on said fuel pumped and currency received amounts and to transmit said service schedule for each of said filling stations to a service administrator.

34. A method as set forth in Claim 24, wherein said particular site controller is capable of receiving and storing a change dispensed amount from said change dispenser system, and further comprising the step of operating said particular site controller to transmit said changed dispensed amount to said remote computer center.

35. A method as set forth in Claim 34, further comprising the step of operating said remote computer center to determine a service schedule for each of said change dispensers at each of said filling stations based at least partially on said change dispensed amounts and to transmit said service schedule for each of said filling stations to a service administrator.

36. A method for use in operating a plurality of filling stations, comprising the steps of:

providing at least one pump system for dispensing fuel at each of said filling stations, said pump system including a payment processor configured for receiving payments from customers and controlling operation of said pump system in response to said payments;

providing at least one change dispenser system being adapted for dispensing change to said customers at least partially in currency at each of said filling stations, said change dispenser system including a code processor for receiving codes from said customers and controlling operation of said change dispenser system;

providing a remote computer center interconnected via a communications network to each of said pump systems and said change dispenser systems, wherein said remote computer center is operable to exchange operating information with said each of said pump systems and said change dispenser systems via said communications network;

transmitting from one of said filling stations a malfunction signal associated with a malfunction of at least one of said pump systems and said change dispenser systems from one of said filling stations;

receiving at said remote computer center said malfunction signal; and

transmitting from said remote computer center a remedy signal, in response to said received malfunction signal, to one of a service administrator and said one of said filling stations transmitting said malfunction signal.

37. A method as set forth in Claim 36, further comprising the step of providing a customer communication system interconnecting customers at each of said filling stations to said remote computer center whereby said customers may transmit said malfunction signals to said remote computer center.

38. A method as set forth in Claim 37, wherein said transmitting said malfunction signal step is performed by said customers via said customer communication system.

39. A method as set forth in Claim 38, further comprising the step of receiving, by a customer performing said transmitting said malfunction signal step, via said customer communication system said remedy signal, wherein said remedy signal comprises a refund code that said customer may use to operate at least one of a pump system and a change dispenser located at one of said filling stations to dispense a refund amount, said refund amount being in the form of one of a credit voucher, a fuel authorization code, fuel, and an amount of currency.

40. A method as set forth in claim 36, further comprising the steps of:

providing a site controller at each of said filling stations interconnected via said communications network to said remote computer center, said site controller being operable for transmitting operating signals to said at least one pump system and said at least one change dispenser;

receiving said remedy signal at said site controller of said one of said filling stations that transmitted said malfunction signal; and

operating said site controller, in response to said received remedy signal, to transmit an operating signal to one of said at least pump system and said at least one change dispenser, whereby said one of said at least pump system and said at least one change dispenser operates in response to said operating signal to remedy said malfunction.

41. A method for use in operating a plurality of filling stations, comprising the steps of:

providing at least one pump system for dispensing fuel at each of said filling stations;

providing at least one change dispenser system being adapted for dispensing change to said customers at least partially in currency at each of said filling stations;

providing an alarm system including a means for monitoring the physical integrity of at least one of said at least one pump system and said at least one change dispenser system of each of said filling stations;

interconnecting said alarm system to a communications network configured so that said alarm system may transmit alarm signals to an emergency response administrator located at a location different from said filling stations; and

operating said alarm system to monitor the physical integrity of said at least one of said at least one pump system and said at least one change dispenser system of each of said filling stations and to transmit an alarm signal to said emergency response administrator upon sensing a change in the physical integrity of a particular, monitored pump system or change dispenser system at one of said filling stations.

42. A method as set forth in Claim 41, wherein said means for monitoring includes at least a first sensor interconnected with said at least one change dispenser system, said first sensor being operable to monitor the physical integrity of said at least one change dispenser system and to communicate any change in the physical integrity of said at least one change dispenser system to said alarm system.

43. A method as set forth in Claim 42, wherein said means for monitoring includes at least a second sensor interconnected with said at least one pump system, said first sensor being operable to monitor the physical integrity of said at least one pump system and to communicate any change in physical integrity to said alarm system.

44. A method as set forth in Claim 43, said at least a first sensor and said at least second sensor being in communication.

45. A method as set forth in Claim 41, further comprising the steps of:

providing a remote computer center interconnected via said communications network to each of said alarm systems, wherein said remote computer center is operable to exchange alarm status information including alarm signals, associated with said at least one of said at least one pump system and said at least one change dispenser system of each of said filling stations, with said each of said alarm systems;

receiving, from an alarm system at one of said filling stations, an alarm signal at said remote computer center; and

operating said remote computer center to determine an alarm response based on said received alarm signal and to transmit said determined alarm response to said emergency response administrator.

46. A method for use in operating a plurality of filling stations, comprising the steps of:

providing a remote computer center operable for exchanging operating information with said filling stations, wherein each of said filling stations includes at least one pump system for dispensing fuel to customers, at least one change dispenser system for dispensing change to said customers in currency, and a site controller for communicating with and controlling operation of said at least one pump system and said at least one change dispenser system;

interconnecting said remote computer center to each of said site controllers at said filling stations via a communications network;

receiving, at said remote computer center, said operating information from said site controllers at each of said filling stations; and

operating said remote computer center to transmit operating instructions, at least partially related to said received operating information, to said site controllers, whereby said site controller operation is at least partially remotely controlled by said remote computer center.

47. A method as set forth in Claim 46, wherein said operating information includes the amount of fuel pumped and the amount of currency received by each of said pump systems.

48. A method as set forth in Claim 46, wherein said operating information includes the amount of currency received and the amount of currency dispensed by each of said change dispensers.

49. A method as set forth in Claim 46, wherein said each of said filling stations further includes a customer communication system interconnecting customers to said remote computer center, whereby said customers and said remote computer center exchange malfunction information associated with said pump systems and said change dispenser systems.

50. A method as set forth in Claim 49, further comprising the step of employing said remote computer center to operate, via a particular site controller, a change dispenser system so as to dispense to a customer a refund amount in the form of one of a credit voucher, a fuel authorization code, and an amount of currency, said refund

amount being based on malfunction information received by said remote computer center from said customer via said customer communication system.

51. A method as set forth in Claim 46, wherein said operating instructions transmitted by said remote computer center include at least one of fuel prices, fuel authorization codes, credit card authorizations, debit card authorizations, and currency refund amounts.

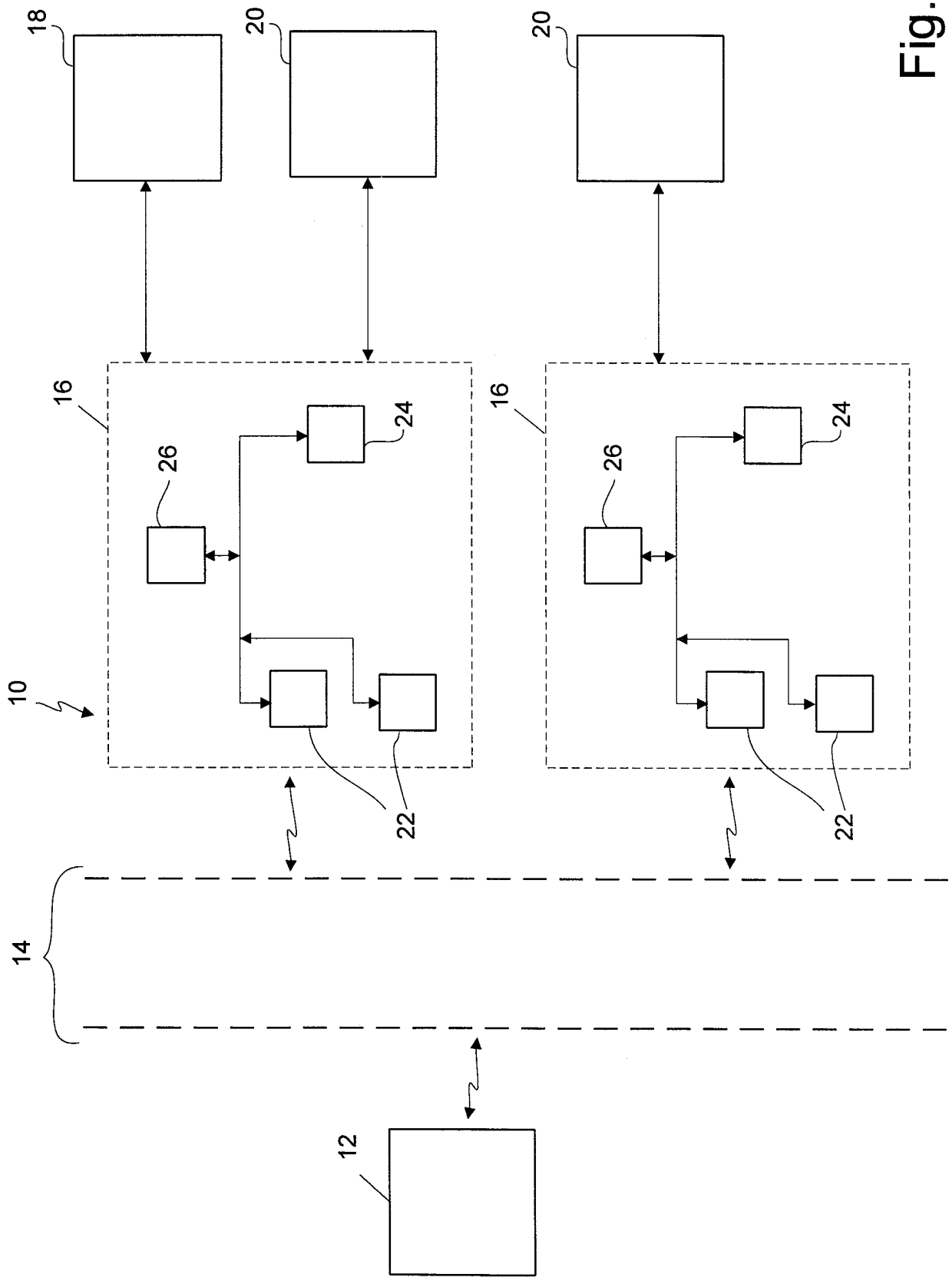


Fig. 1

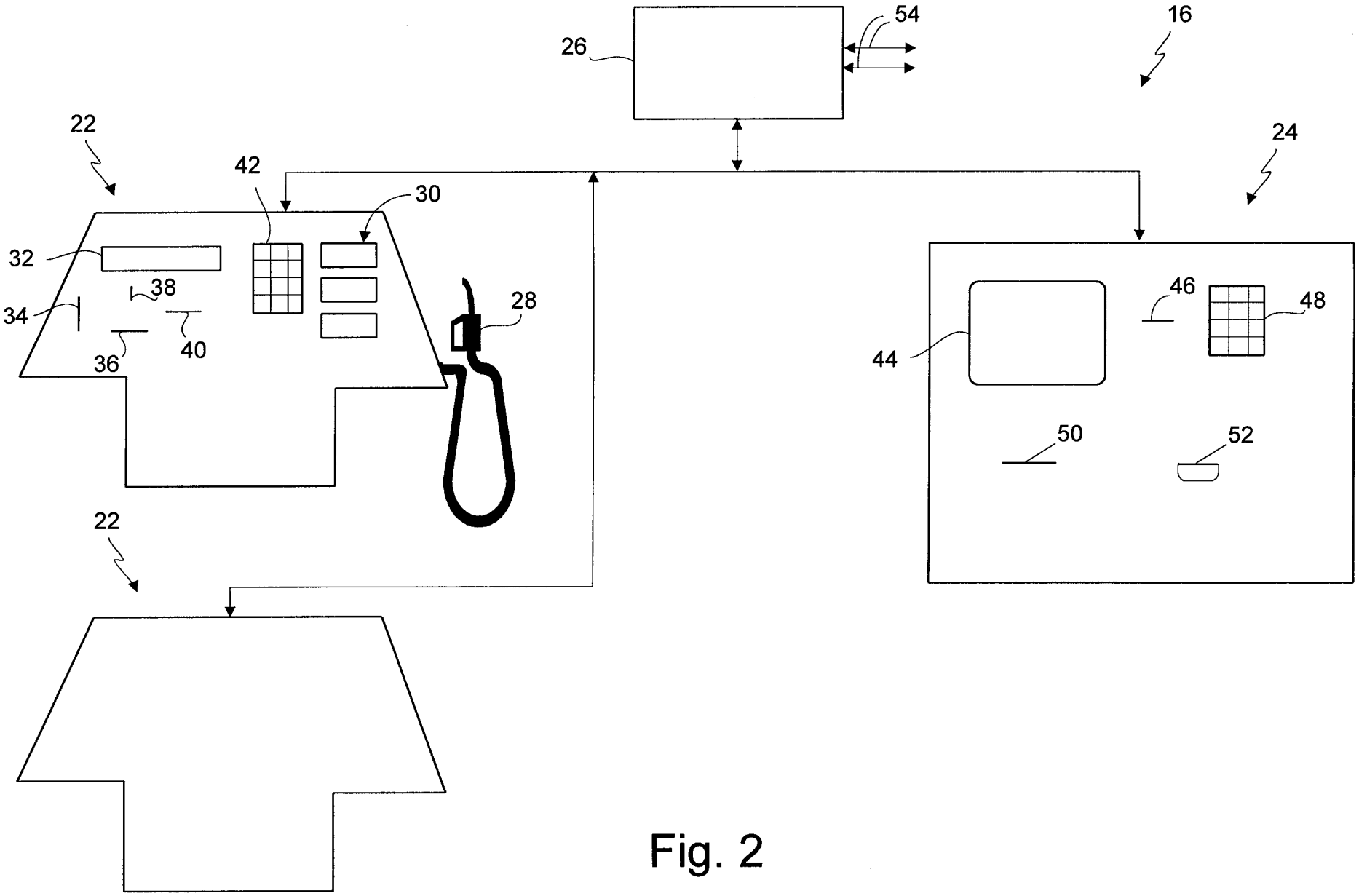


Fig. 2

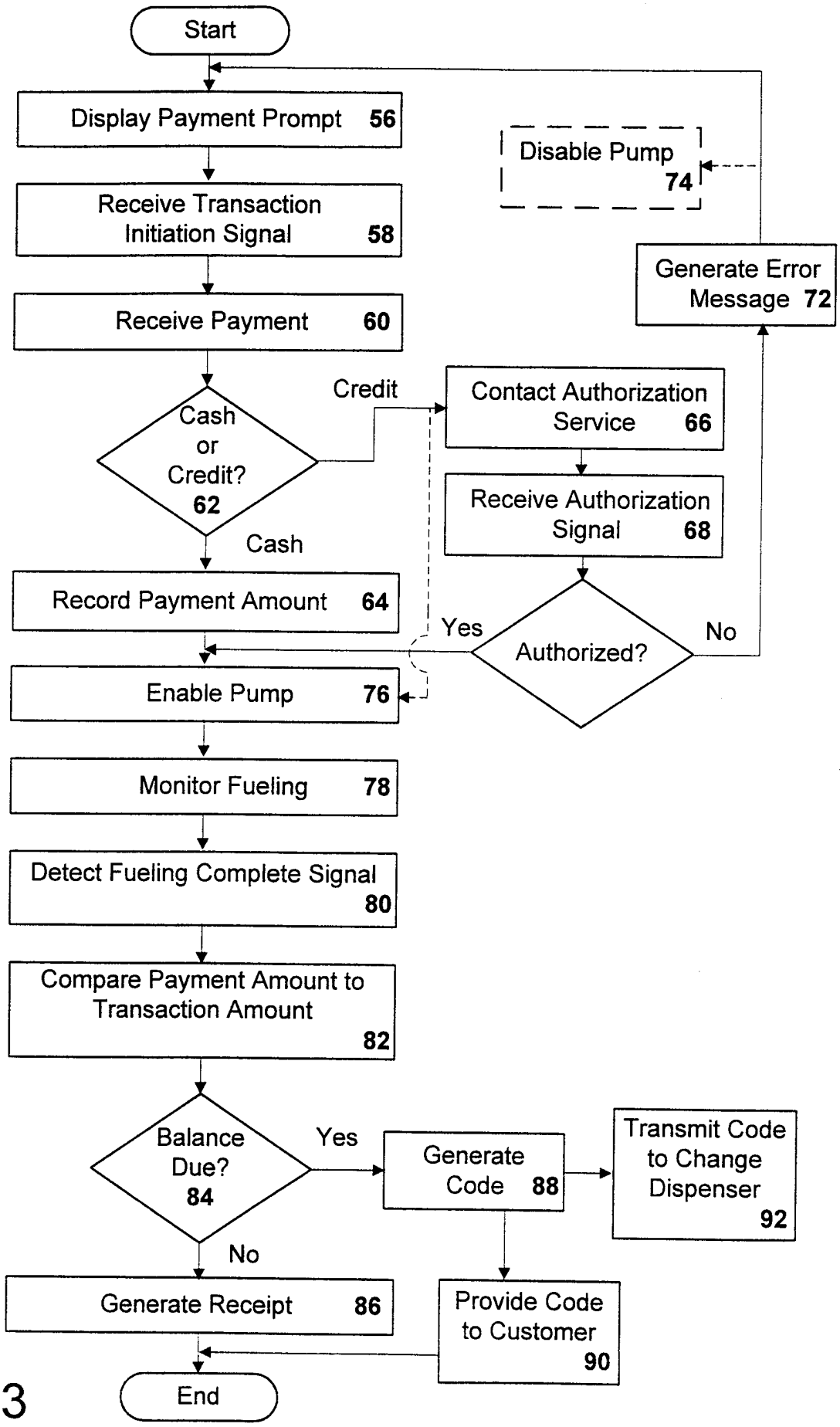
Start
Display Payment Prompt 56
Receive Transaction Initiation Signal 58
Receive Payment 60
Cash or Credit? 62
Credit
Cash
Contact Authorization Service 66
Receive Authorization Signal 68
Authorized?
Yes
No
Disable Pump 74
Generate Error Message 72
Record Payment Amount 64
Enable Pump 76
Monitor Fueling 78
Detect Fueling Complete Signal 80
Compare Payment Amount to Transaction Amount 82
Balance Due? 84
Yes
No
Generate Code 88
Transmit Code to Change Dispenser 92
Generate Receipt 86
Provide Code to Customer 90
End

Fig. 3

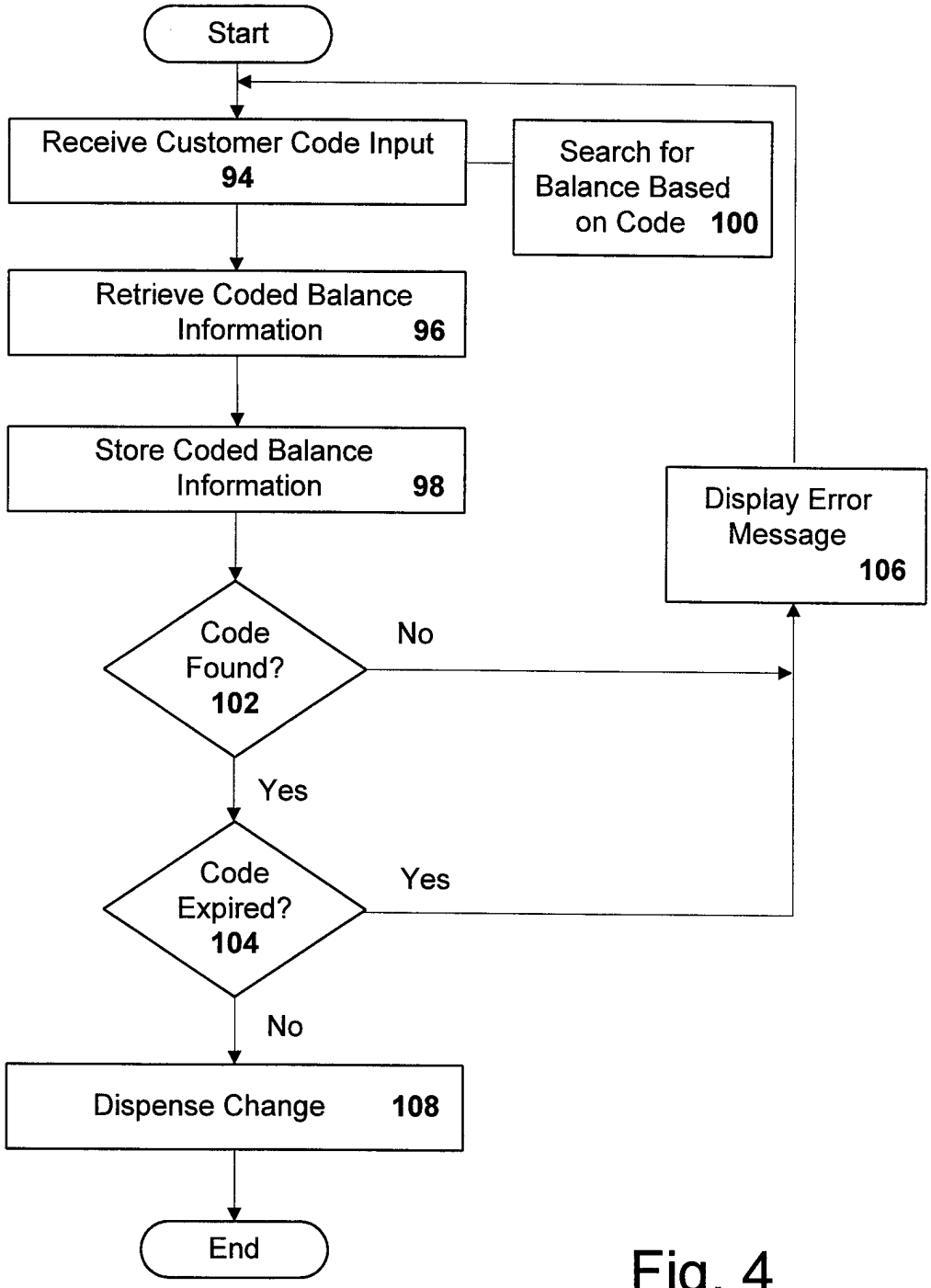
Start
Receive Customer Code Input 94
Search for Balance Based on Code 100
Retrieve Coded Balance Information 96
Store Coded Balance Information 98
Display Error Message 106
Code Found? 102
No
Yes
Code Expired? 104
Yes
No
Dispense Change 108
End

Fig. 4

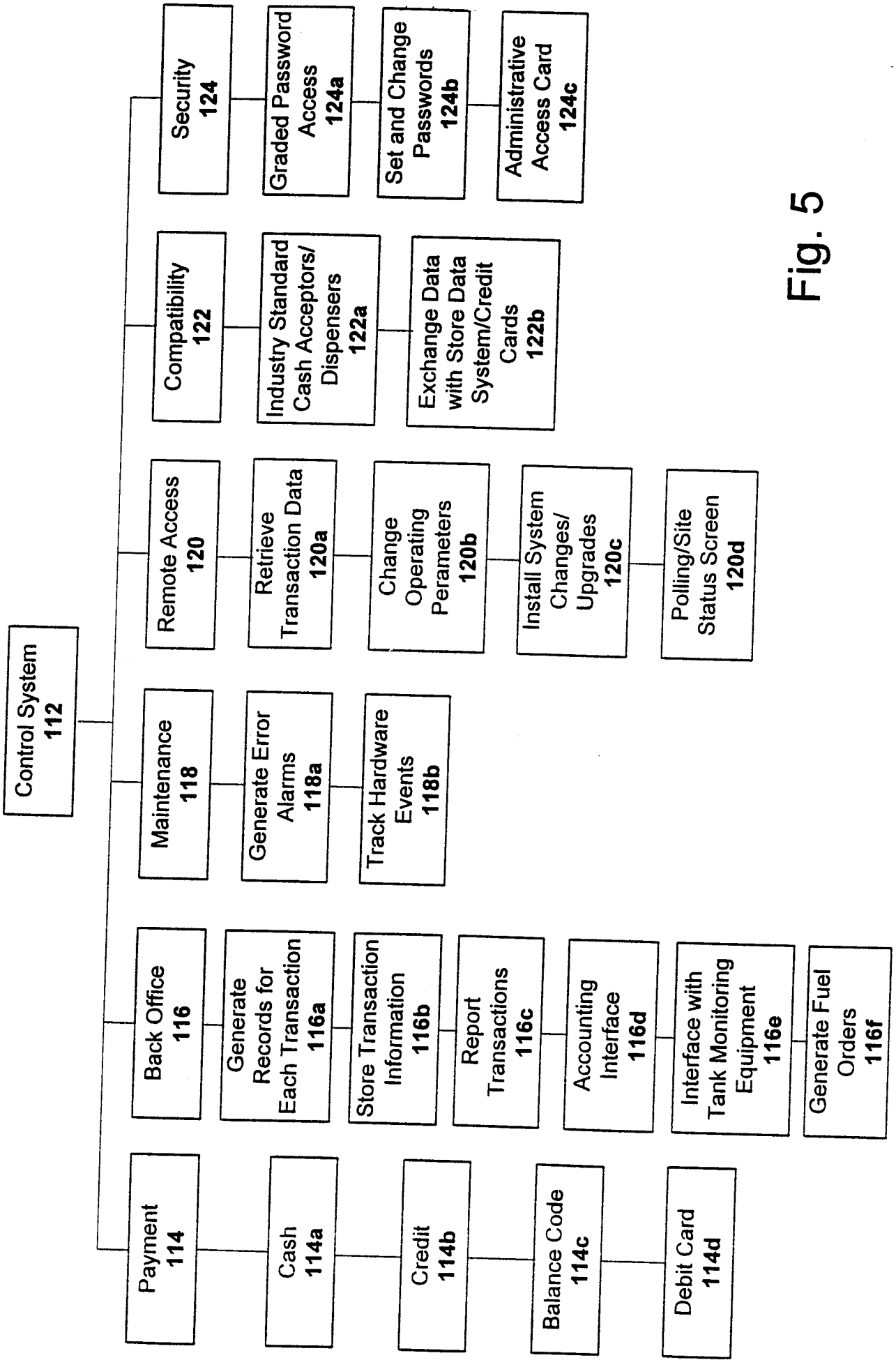
Control System 112
Payment 114
Cash 114a
Credit 114b
Balance Code 114c
Debit Card 114d
Back Office 116
Generate Records for Each Transaction 116a
Store Transaction Information 116b
Report Transactions 116c
Accounting Interface 116d
Interface with Tank Monitoring Equipment 116e
Generate Fuel Orders 116f
Maintenance 118
Generate Error Alarms 118a
Track Hardware Events 118b
Remote Access 120
Retrieve Transaction Data 120a
Change Operating Perameters 120b
Install System Changes/ Upgrades 120c
Polling/Site Status Screen 120d
Compatibility 122
Industry Standard Cash Acceptors/ Dispensers 122a
Exchange Data with Store Data System/Credit Cards 122b
Security 124
Graded Password Access 124a
Set and Change Passwords 124b
Administrative Access Card 124c

Fig. 5

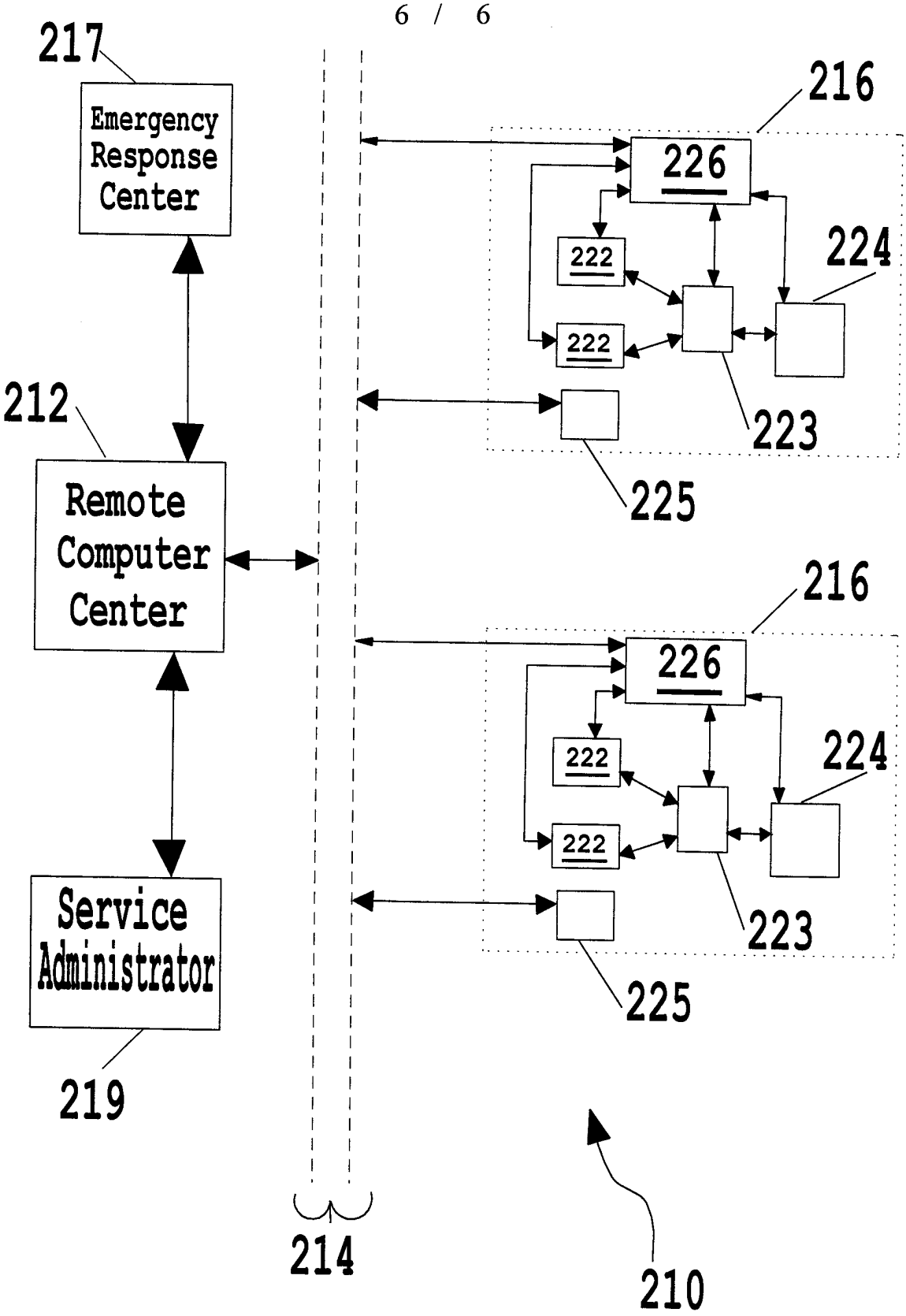
217
Emergency Response Center
212
Remote Computer Center
Service Administrator
219
214
210
216
226
222
222
224
223
225
216
226
222
222
224
223
225

Fig. 6

# INTERNATIONAL SEARCH REPORT

International application No.
PCT/US98/11160

**A. CLASSIFICATION OF SUBJECT MATTER**

IPC(6) :G06F 17/60; GO7F 07/02, 07/04
US CL :Please See Extra Sheet.
According to International Patent Classification (IPC) or to both national classification and IPC

**B. FIELDS SEARCHED**

Minimum documentation searched (classification system followed by classification symbols)

U.S. : Please See Extra Sheet.

Documentation searched other than minimum documentation to the extent that such documents are included in the fields searched

None

Electronic data base consulted during the international search (name of data base and, where practicable, search terms used)

None

**C. DOCUMENTS CONSIDERED TO BE RELEVANT**

| Category* | Citation of document, with indication, where appropriate, of the relevant passages | Relevant to claim No. |
|---|---|---|
| A | US 3,184,714 A (BROWN, JR. et al) 18 May 1965, see columns 1-3. | 1-51 |
| X | US 3,618,732 A (FORSE) 09 November 1971, see abstract. | 17, 22, 23 & 46-49 |
| X | US 3,921,854 A (FORMICA et al) 25 November 1975, see abstract. | 17, 22, 23 & 46-49 |
| X | US 3,999,685 A (GREENWOOD) 28 December 1976, see abstract. | 17, 22, 23 & 46-49 |
| X | US 4,900,906 A (PUSIC) 13 February 1990, see abstract. | 17, 22, 23 & 46-49 |
| Y | US 5,608,643 A (WICHTER et al) 04 March 1997, see abstract. | 36-45, 50 & 51 |

[X] Further documents are listed in the continuation of Box C. [ ] See patent family annex.

| | | | |
|---|---|---|---|
| * | Special categories of cited documents: | "T" | later document published after the international filing date or priority date and not in conflict with the application but cited to understand the principle or theory underlying the invention |
| "A" | document defining the general state of the art which is not considered to be of particular relevance | "X" | document of particular relevance; the claimed invention cannot be considered novel or cannot be considered to involve an inventive step when the document is taken alone |
| "E" | earlier document published on or after the international filing date | "Y" | document of particular relevance; the claimed invention cannot be considered to involve an inventive step when the document is combined with one or more other such documents, such combination being obvious to a person skilled in the art |
| "L" | document which may throw doubts on priority claim(s) or which is cited to establish the publication date of another citation or other special reason (as specified) | "&" | document member of the same patent family |
| "O" | document referring to an oral disclosure, use, exhibition or other means | | |
| "P" | document published prior to the international filing date but later than the priority date claimed | | |

| | |
|---|---|
| Date of the actual completion of the international search<br>19 AUGUST 1998 | Date of mailing of the international search report<br>OCT 13 1998 |
| Name and mailing address of the ISA/US<br>Commissioner of Patents and Trademarks<br>Box PCT<br>Washington, D.C. 20231<br>Facsimile No. (703) 305-3230 | Authorized officer<br>EDWARD R. COSIMANO<br>Telephone No. (703) 308-9783 |

INTERNATIONAL SEARCH REPORT

International application No.
PCT/US98/11160

C (Continuation). DOCUMENTS CONSIDERED TO BE RELEVANT

| Category* | Citation of document, with indication, where appropriate, of the relevant passages | Relevant to claim No. |
|---|---|---|
| X | WO 98/03980 A1 (VISTA MARKETING GROUP) 29 January 1998, see abstract. | 17, 22, 23 & 46-49 |

# INTERNATIONAL SEARCH REPORT

International application No.
PCT/US98/11160

A. CLASSIFICATION OF SUBJECT MATTER:
US CL :

705/413; 194/200, 206; 221/21; 235/381; 364/479.01, 479.02, 479.11; 705/1, 16

B. FIELDS SEARCHED
Minimum documentation searched
Classification System: U.S.

194/200, 206, 210, 211, 212; 221/21; 222/14, 23; 235/381; 364/479.01, 479.02, 479.11, 479.12, 479.14; 705/1, 16, 17, 22, 413