Sept. 26, 1939. E. D. ROWE ET AL 2,173,862

JAW CRUSHER MECHANISM

Filed March 1, 1938 3 Sheets-Sheet 1

Fig. 1.

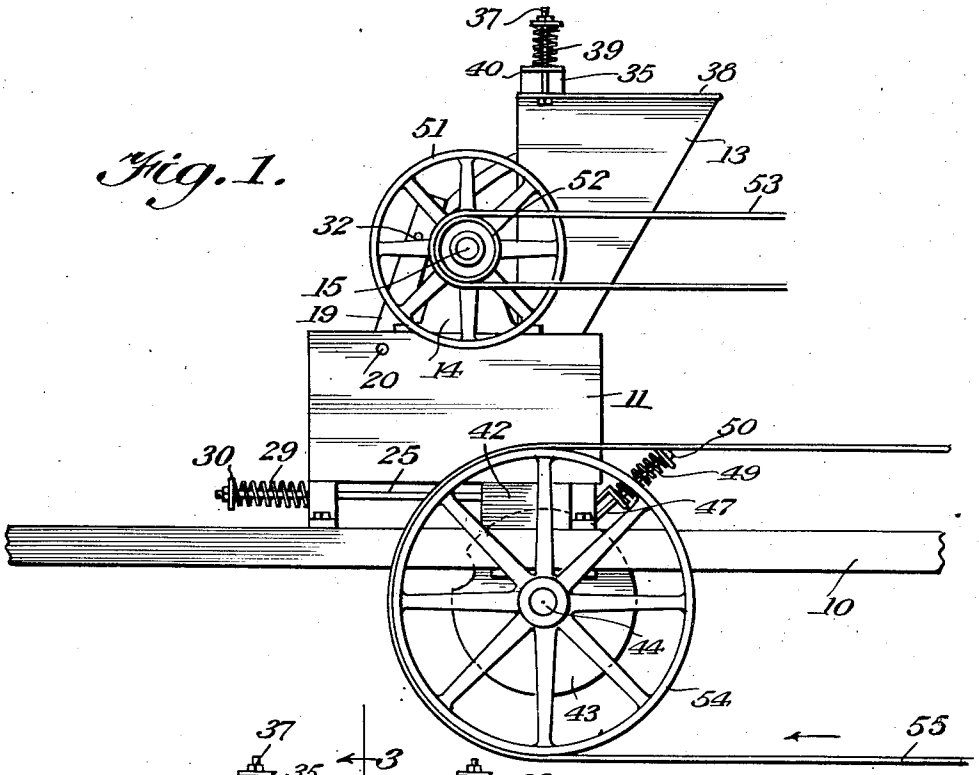

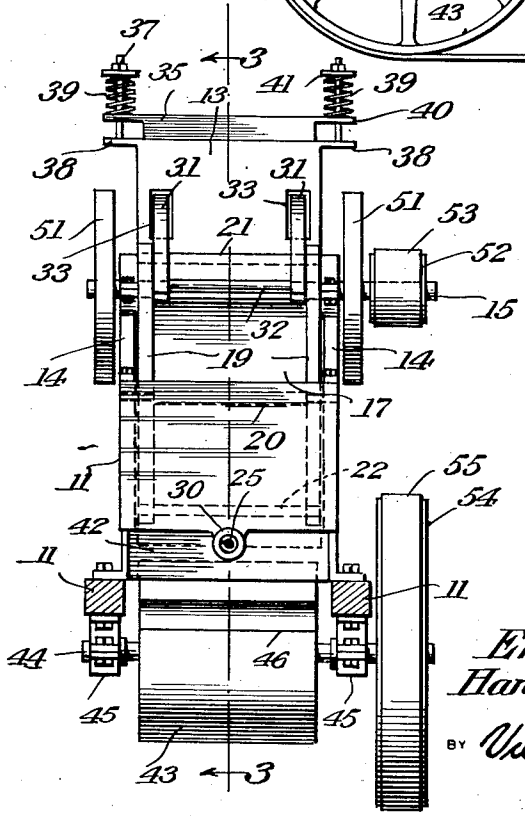

Fig. 2.

Ernest D. Rowe
Hans A. Zetterlund
INVENTOR

BY Victor J. Evans & Co.
ATTORNEYS

Sept. 26, 1939. E. D. ROWE ET AL 2,173,862

JAW CRUSHER MECHANISM

Filed March 1, 1938 3 Sheets-Sheet 2

Fig. 3.

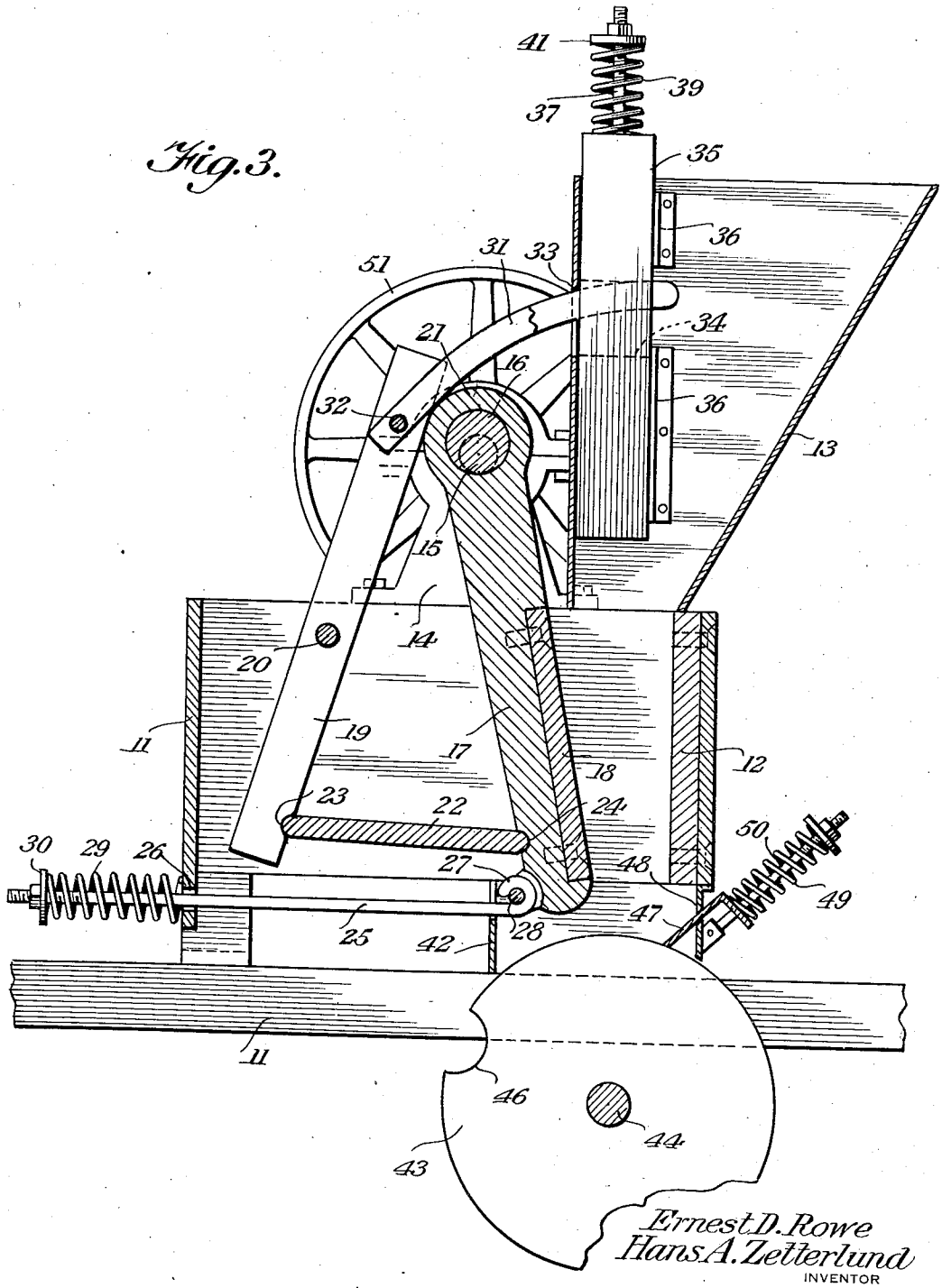

Ernest D. Rowe
Hans A. Zetterlund
INVENTOR

BY Victor J. Evans & Co.
ATTORNEYS

Sept. 26, 1939. E. D. ROWE ET AL 2,173,862

JAW CRUSHER MECHANISM

Filed March 1, 1938 3 Sheets-Sheet 3

Fig. 4.

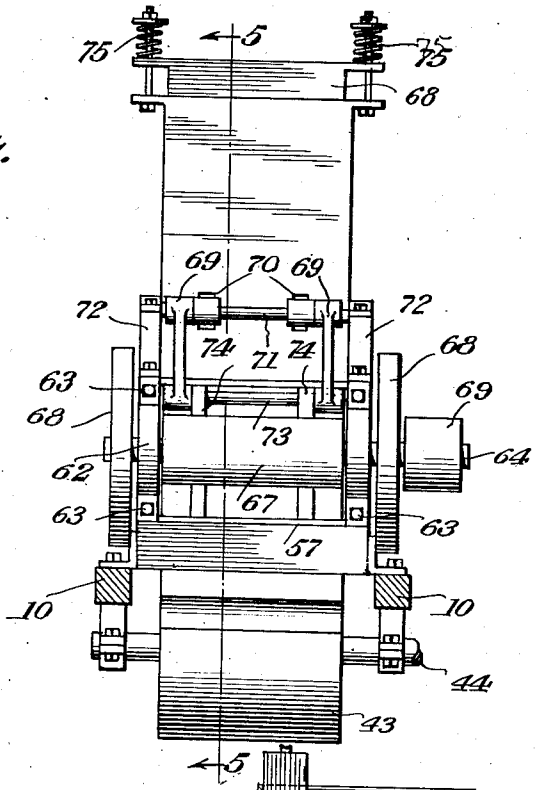

Fig. 5.

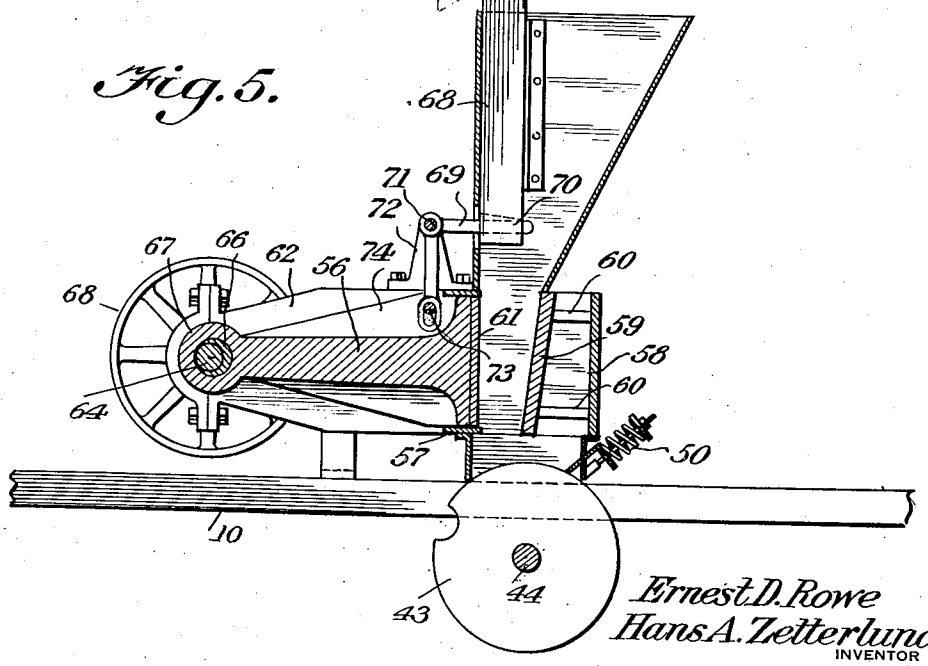

Ernest D. Rowe
Hans A. Zetterlund
INVENTOR

BY Victor J. Evans & Co.
ATTORNEYS

Patented Sept. 26, 1939 2,173,862

UNITED STATES PATENT OFFICE

2,173,862

JAW CRUSHER MECHANISM

Ernest D. Rowe and Hans A. Zetterlund, Sioux Falls, S. Dak.

Application March 1, 1938, Serial No. 193,352

1 Claim. (Cl. 83—53)

This invention relates to method and apparatus for removing soft rock and objectionable material from crushed rock and gravel.

An object of the invention is to produce a material having any predetermined coefficient of hardness by eliminating the soft particles commonly found in aggregate deposits, regardless of the size of such soft and objectionable material, by forcing the hard and soft materials to work or act against each other in a suitable machine for this purpose, the essential steps of the process being first confining the material in a chamber, then exerting sufficient pressure thereupon to pulverize the soft material through grinding and squeezing action of the hard material against the soft material without destroying but a very small portion of the useable material.

A further object is to provide apparatus for carrying out the process efficiently.

With the above and other objects in view the invention consists of certain novel details of construction and combinations of parts hereinafter fully described and claimed, it being understood that various modifications may be resorted to within the scope of the appended claim without departing from the spirit or sacrificing any of the advantages of the invention.

In the accompanying drawings forming part of this specification,

Figure 1 is a side elevation of apparatus adapted to remove soft rock and objectionable material from crushed rock and gravel.

Figure 2 is a front elevation of the apparatus shown in Figure 1.

Figure 3 is a longitudinal sectional view taken on the line 3—3 of Figure 2 drawn to enlarged scale.

Figure 4 is a front elevation of a modified form of the invention.

Figure 5 is a longitudinal sectional view taken on the line 5—5 of Figure 4.

Referring now to the drawings in which like characters of reference designate similar parts in the various views, 10 designates the longitudinal sills of a supporting frame. Mounted on the frame is a casing 11, best shown in Figure 3, one end of the casing constituting a pressure chamber and having attached to the end wall a wear plate 12. A hopper 13 is mounted on the casing and forms means for directing the material to be processed into the compression chamber.

Mounted on the casing in front of the hopper is a pair of bearing pedestals 14. A shaft 15 is journaled in the pedestals and is equipped with an eccentric portion 16. An eccentric motion presser arm 17 is mounted on the eccentric sleeve 16 and is provided in its working face with a removable wear plate 18 which confronts the stationary wear plate 12 in the pressure chamber.

A pair of levers 19 is pivoted on a pivot shaft 20 secured to the sides of the casing 11. The upper ends of the levers bear upon the bearing 21 of the eccentric motion presser arm 17. A toggle plate 22 is secured at the ends in notches 23 and 24 formed at the lower ends of the levers 19 and the presser arm 17 respectively. A rod 25 is slidably fitted in an opening 26 in the casing and is provided at one end with a hook 27 which embraces a pin 28 carried by the lower end of the presser arm. A helical spring 29 is sleeved on the rod and bears against the casing and against a stop collar 30 on the rod.

When the shaft 15 is rotated the eccentric sleeve 16 will impart to the bearing 21 an eccentric movement to move the upper ends of the levers 19 outwardly with the consequent movement of the lower end of the presser arm 17 toward the wear plate 12, against the tension of the spring 29, to exert pressure on the material such as coarse aggregrate deposit, gravel, crushed stone or the like. The eccentric sleeve during one-half of its movement will permit of the levers 19 moving in a reverse direction under urge of the spring 29 ready for the next cycle of compacting movement of the presser arm.

A pair of arcuate levers 31 is pivoted at the lower ends upon a pivot pin 32 which is carried by the upper ends of the levers 19. The arcuate levers bear upon the bearing 21 of the presser arm 17. The free ends of the levers project through openings 33 in the hopper and engage in slots 34 formed in a vertically disposed vibrator or tamper 35. The vibrator extends across the hopper and is held in place by superposed angle iron guides 36. Pins 37 are secured to the flanges 38 in the hopper, best shown in Figure 2. Helical springs 39 are sleeved on the pins and confined under tension between flanges 40 on the vibrator and stop collars 41 on the pins.

The bearing 21 of the presser arm together with the lever 19 will carry the arcuate levers 31 outwardly to permit the springs 39 moving the vibrator 35 downwardly upon the material to tamp the material tightly in the compression chamber simultaneously with crushing movement of the presser arm.

In practice soft material, regardless of size will be crushed and pulverized by the combined pressure of the presser arm and the vibrator and

through this crushing, grinding or squeezing action of the hard material against the soft material, the soft material will be pulverized without destroying but a very small portion of the useable material of the hardness desired.

A discharge box 42 is mounted on the sills 10 and communicates with the casing at the bottom of the compression chamber. A dispensing wheel 43 is fixed to a shaft 44 which is journaled in bearings 45 which are fixed to the sills 10. The wheel closes the bottom of the discharge box and is provided with a concave transversely extending pocket 46 which is adapted to pick up a small quantity of the processed material at each revolution of the wheel and discharge same from the machine. By controlling the speed of the dispensing wheel 43 and extending pocket 46, the material is retained in the compression chamber, until such time as the soft material contained within the chamber has been pulverized and is ready for discharge. The discharged processed material may be carried by a suitable conveyor to a suitable screen for separating the pulverized soft material from the hard useable material.

A gate 47 is slidably mounted in an opening 48 in the discharge box and is held in rubbing engagement with the surface of the discharge wheel by a helical spring 49 which is sleeved on a rod 50 that is secured to the discharge box.

The shaft 15 is provided with heavy wheels 51 on the ends to impart momentum to the shaft. A drive pulley 52 is secured to one end of the shaft and may be connected by a belt 53 to any suitable source of power to operate the presser arm and the vibrator.

The shaft 44 of the discharge wheel 43 is equipped with a drive pulley 54 which may be driven by a belt 55 by any suitable source of power.

A modified form of the invention is shown in Figures 4 and 5 in which the crushing power of the presser arm is exerted in a straight line horizontal direction. In this embodiment of the invention the presser arm 56 is in the nature of a plunger which is mounted between superposed bearing plates 57 carried by the casing 58. The plunger confronts an obliquely disposed wear plate 59 secured to the casing by brackets 60 to provide a compression chamber between the wear plate and a removable wear plate 61 on the presser arm. Bearing brackets 62 are secured to the casing by bolts 63 as shown best in Figure 4. A drive shaft 64 is journaled at the ends in the brackets and intermediate the ends is equipped with an eccentric sleeve 66 which is received in a bearing 67 formed on the presser arm 56.

The shaft 64 is provided at both ends with a heavy fly wheel 68 and one end is equipped with a driving pulley 69. Rotary movement of the shaft will impart horizontal movement to the presser arm toward and away from the wear plate 59 to alternately exert pressure upon and release pressure upon the agglomerate in the pressure chamber.

The vibrator 68 is constructed identical with the vibrator previously described. However, the actuating means for the vibrator in this embodiment of the invention comprises bell crank levers 69 which enter slots 70 in the vibrator. The bell crank levers are pivoted on a pivot shaft 71 which is connected by bearing brackets 72 disposed on the casing 58. The lower ends of the bell crank levers are pivotally connected to a pivot pin 73 which is carried by webs 74 formed on the presser arm. When the presser arm is reciprocated the bell crank lever 69 will alternately raise and release the vibrator 68, the springs 75 of the vibrator actuating the vibrator during down stroke as previously described.

The remaining parts of the modified form of the invention are identical with the corresponding parts of the preferred form of the invention previously described and a description thereof is thought to be unnecessary.

From the above description it is thought that the construction and operation of the invention will be fully understood without further explanation.

What is claimed is:

Apparatus for treating aggregate material for subsequent separation of soft rock comprising a casing, a power driven shaft mounted on the casing, a presser member extending into the casing, an eccentric journal pivotally mounting the presser member at the upper end on the shaft, a stationary member opposing the presser member, a lever pivoted in the casing and having one end bearing upon the eccentric journal of said presser member at a point above its pivot, a toggle plate connected to the other end of the lever below the pivot of the lever and connected to said presser member, a spring controlled rod connected to said presser member and adapted to return the presser member to neutral position after each actuation of the presser member by said lever and said toggle plate, a hopper on said casing, a vertically disposed vibrator in the hopper adapted to tamp material in front of said presser member, a lever having one end pivotally connected to the first named lever and having the other end engaging the vibrator, the second named lever being fulcrumed on the top of the eccentric journal of the presser member and adapted to move the vibrator alternately with respect to the presser member, and means for delivering and controlling the delivery of processed material from the casing.

ERNEST D. ROWE.
HANS A. ZETTERLUND.