Oct. 10, 1944. N. TESTI 2,359,807

MAGAZINE SAFETY RAZOR

Filed Oct. 12, 1942 3 Sheets-Sheet 1

Fig. 1

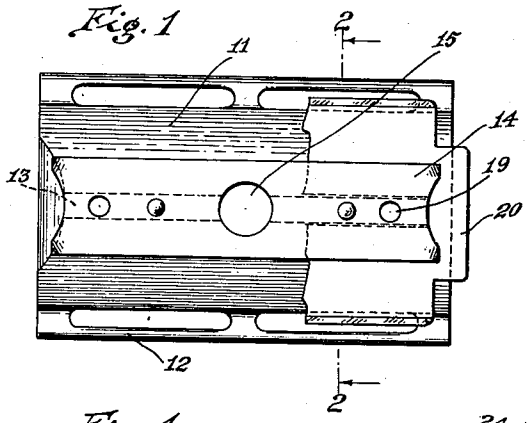

Fig. 2

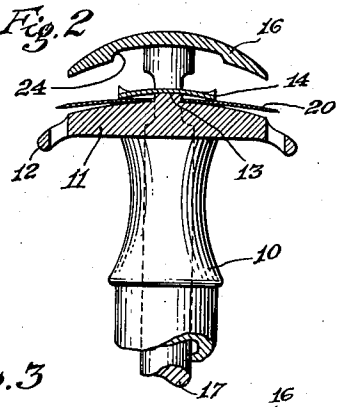

Fig. 3

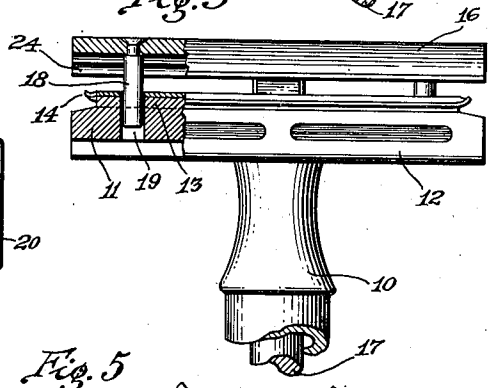

Fig. 4

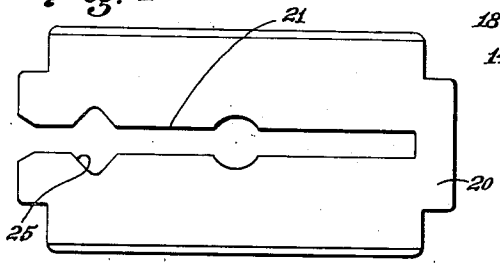

Fig. 5

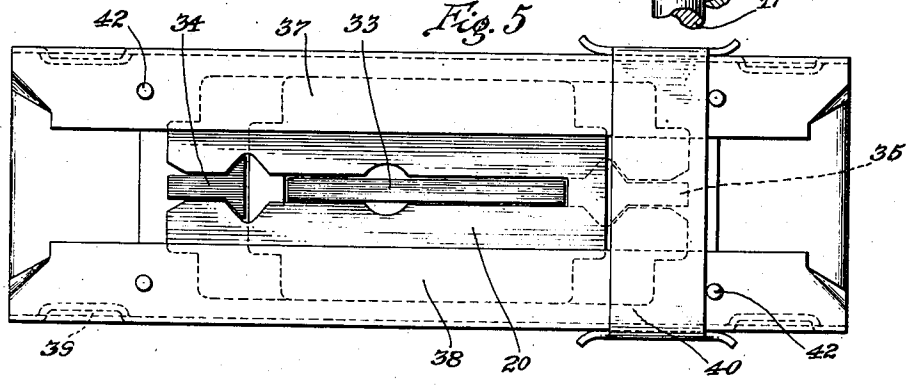

Fig. 6

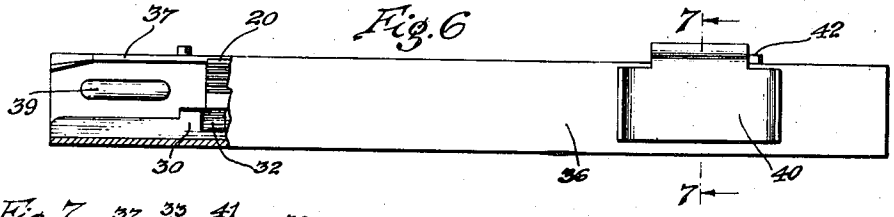

Fig. 7

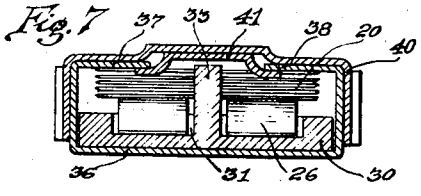

INVENTOR.

Nicholas Testi

BY

H. W. Cummings Atty.

Oct. 10, 1944. N. TESTI 2,359,807

MAGAZINE SAFETY RAZOR

Filed Oct. 12, 1942 3 Sheets-Sheet 2

Fig. 8

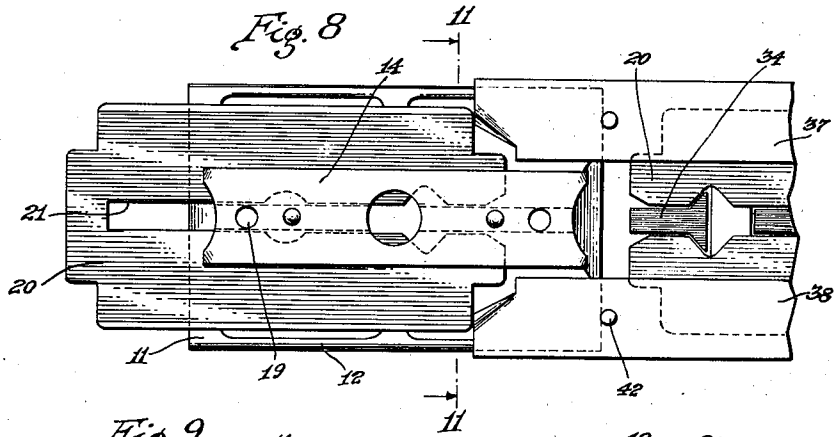

Fig. 9

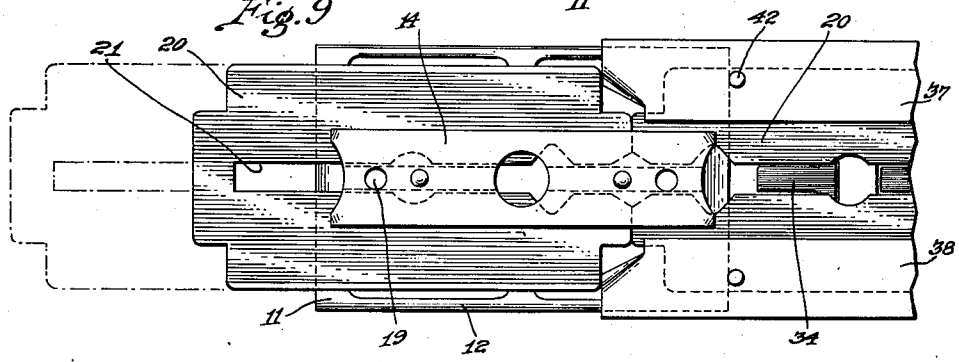

Fig. 10

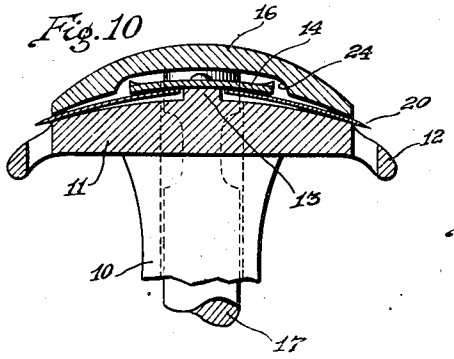

Fig. 11

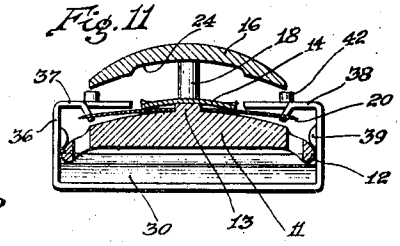

Fig. 12

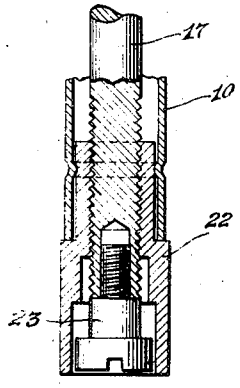

INVENTOR.

Nicholas Testi

BY H. W. Kenway. Atty.

Oct. 10, 1944. N. TESTI 2,359,807

MAGAZINE SAFETY RAZOR

Filed Oct. 12, 1942 3 Sheets-Sheet 3

Fig. 13

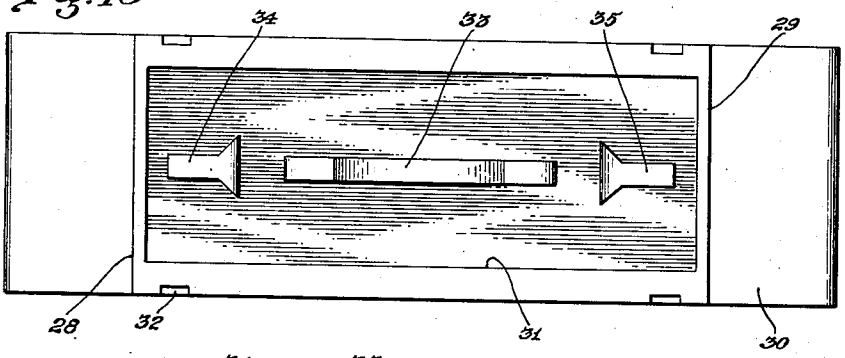

Fig. 14

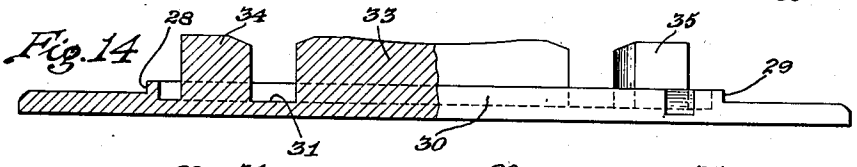

Fig. 15

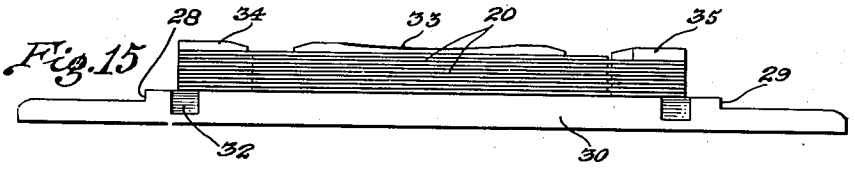

Fig. 16

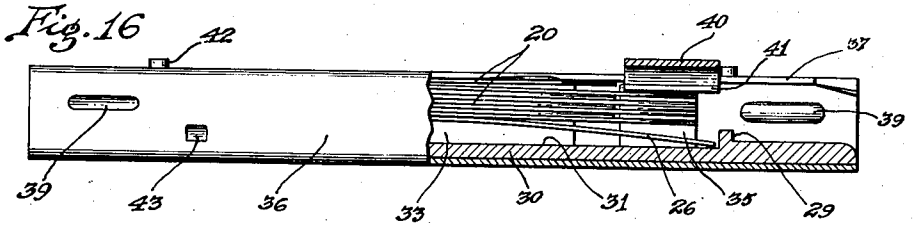

Fig. 17

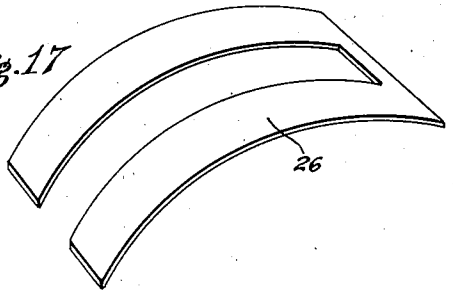

INVENTOR.

Nicholas Testi

BY H. W. Conway Atty.

Patented Oct. 10, 1944 2,359,807

UNITED STATES PATENT OFFICE

2,359,807

MAGAZINE SAFETY RAZOR

Nicholas Testi, Boston, Mass., assignor to Gillette Safety Razor Company, Boston, Mass., a corporation of Delaware

Application October 12, 1942, Serial No. 461,702

9 Claims. (Cl. 206—16)

This invention relates to safety razors and magazines for safety razor blades. In one aspect it consists in a new and improved safety razor having means for positioning and retaining a slotted open-end blade therein in condition of transverse curvature independently of the usual blade-clamping cap. In another aspect it comprises a novel safety razor and magazine combination. In still another aspect the invention consists in a new and improved blade magazine wherein the blades are maintained stacked in longitudinally staggered relation and the blade located consecutively uppermost in the stack is fed out of the magazine by a feeding device which engages a portion of the blade already separated from the next adjacent blade by the staggered arrangement of the blades in the stack.

An important feature of the invention consists in a safety razor having a blade-supporting member or guard equipped with a blade-locating rib and a blade-retaining plate by which a slotted open-end blade may be retained upon the guard in a transversely curved position. This construction not only adapts the razor to receive blades of different thicknesses but by flexing the blade develops friction sufficient to retain it against accidental displacement on the guard. It also provides means for positively controlling contacting ends of blades being ejected and being presented and thus obviates the possibility of one blade riding over the other and jamming in the razor, a difficulty which has been troublesome in the past in dealing with magazine-supplied razors.

The feature of the razor construction above discussed is also important as one factor of a new combination of razor and magazine. It has been found impractical to engage the unsupported end of the blade in use by the unsupported end of a fresh blade and accordingly the present invention contemplates equipping the magazine with means for initially displacing the used blade in the razor or as to carry its end into a position where it is sandwiched between or positively located by the retaining plate and the guard surface. The magazine is provided with a a feeding device which thereupon advances a new blade without any obstruction whatever until its advancing end encounters the used blade in its displaced position. Accordingly, the meeting ends of the two blades are positively controlled during the entire time that one is being ejected by the other.

Another feature of the invention consists in a double-ended magazine arranged to contain a stack of blades in longitudinal staggered relation and having means for feeding the blades alternately first from one and then from the other end of the magazine.

My invention includes also a novel combination of reversible magazine and reversible razor so constructed and arranged that blades are delivered from one end of the magazine to one end of the razor and from the other end of the magazine to the other end of the razor, reversing both razor and magazine between each withdrawal of a blade from the stack.

In this connection my invention includes as another important aspect the novel process of separating and feeding slotted open-end blades which consists in stacking the blades with the slots of alternate blades opening in opposite directions and with alternate blades displaced longitudinally in the stack, and then withdrawing one by one the blades successively located uppermost in the stack and reversing the stack end for end between each withdrawal.

These and other features of the invention will be best understood and appreciated from the following description of a preferred embodiment thereof selected for purposes of illustration and shown in the accompanying drawings, all shown on an enlarged scale and in which:

Fig. 1 is a plan view of the guard member showing a portion of a blade thereon;

Fig. 2 is a view of the razor head in cross-section, showing the cap in elevated position;

Fig. 3 is a view in side elevation corresponding to Fig. 2 but with the end portions in section;

Fig. 4 is a plan view of a slotted open-end blade adapted for use with the razor of Figs. 1–3;

Fig. 5 is a plan view of the magazine;

Fig. 6 is a corresponding view in side elevation showing portions of the casing broken away;

Fig. 7 is a view of the magazine in cross-section on the line 7—7;

Figs. 8 and 9 are views of the guard and one end of the magazine showing the blade being ejected in two different positions;

Fig. 10 is a sectional view of the razor head on a still further enlarged scale showing the blade clamped for shaving;

Fig. 11 is a view in cross-section on the line 11—11 of Fig. 8, with the addition of the cap member;

Fig. 12 is a detailed view in longitudinal section of the end of the razor handle;

Fig. 13 is a plan view of the base plate of the magazine;

Fig. 14 is a corresponding view in side elevation, partly in longitudinal section;

Fig. 15 is a view of the base plate and associated parts showing also a stack of blades in position thereon;

Fig. 16 is a view of the magazine in side elevation showing one end in a longitudinal section; and

Fig. 17 is a view in perspective of the magazine spring.

The safety razor herein illustrated includes in its structure a tubular handle 10 to the upper end of which is rigidly secured a blade-supporting member or guard 11 which is generally rectangular in outline and provided with a shouldered convex blade-supporting face. Longitudinal slots are formed in the guard to provide marginal guard bars 12 which together with the razor cap determine the edge exposure of the shaving edge of the blade.

The blade-supporting face of the guard is provided centrally with a longitudinal blade-locating rib 13 to the upper face of which is permanently secured by rivets or otherwise an elongated blade-retaining plate 14. The rib 13 extends above the face of the guard 11 and is spaced therefrom by a distance somewhat more than the thickness of the thickest blade which is to be used in the razor. Its upper face and the blade-retaining plate 14 are both curved transversely approximately concentrically with the convex face of the guard so that any flexible blade inserted between the guard and the retaining plate 14 is itself transversely flexed.

The guard, rib and retaining plate are drilled to provide a circular aperture 15 through which extends a spindle 17 carrying at its upper end a blade-clamping cap 16. The inner or blade-clamping face of the cap 16 is concaved transversely on a curve corresponding substantially to the transverse curvature of the guard 11. It is provided with an elongated recess 24 in which the received plate 14 may be retained with clearance when the cap is drawn down to its blade-clamping position as suggested in Fig. 10. The cap 16 is also provided with a pair of spaced downwardly projecting pins 18 for which holes 19 are provided in the guard and through the blade-retaining plate 14. It will be understood that the pins 18 move freely in the holes 19 and thus maintain the cap and guard accurately in aligned relation. The retaining plate 14 is provided with concave end edges. All four of its corners are deflected upwardly or flared to a slight extent in order to facilitate the introduction of the blade ends beneath them.

As shown in Fig. 12 the lower end of the barrel of the handle 10 is closed by a hollow cylindrical nut 22 which is freely rotatable therein and internally threaded for engagement with the lower end of the spindle 17. The nut is held in place by a circular internal rib in the barrel 10 which fits into an annular groove in the shank of the nut. Thus by turning the nut 22 the spindle 17 and the cap 16 may be raised to disengage the blade or lowered to clamp it in shaving position upon the guard. The lower end of the spindle 17 is axially drilled and threaded to receive the threaded shank of a shouldered retaining screw 23, the head of which is of such dimensions as to pass freely into the end of the hollow nut 22 when the parts of the razor are assembled. The screw 23, of course, limits the movement of the nut 22 with respect to the spindle 17 and these two parts may be completely disengaged by first removing the screw 23 in case it should be desired to take apart the razor for cleaning or for repairs. The upper end of the spindle 17 is flattened on opposite sides beneath the cap 16 to afford clearance for the sides of the slot 21 of the blade.

The razor herein shown is designed for use with a slotted open-end blade 20 of the general character shown in Fig. 4, although not limited in this respect. That blade is generally rectangular in outline, sharpened in its opposite longitudinal edges, provided with corner notches defining elongated unsharpened portions at each end of the blade and provided with a longitudinal slot 21 opening through one end of the blade. The slot 21 is provided with a circular enlargement corresponding to the perforation 15 and forming a passage for the spindle 17. It is also provided with a square-sided enlargement 25 located between its central perforation and the open-end of the slot. The blade is of thin flexible steel of an order of .004"–.006" in thickness.

It will be understood that the blade 20 shown in Fig. 4 may be presented to the guard 11 by hand by slipping the open end of its slot 21 upon the rib 13 and pushing the blade inwardly beneath the blade-retaining plate 14 until its further movement is arrested by contacting the closed or solid end of the blade with the adjacent end of the rib 13. In this movement of presentation the blade is transversely flexed to a noticeable degree by the cooperation of the convex guard surface and concave under surface of the retaining plate 14. The spacing of the retaining plate is such as to accommodate beneath it any blade of appropriate thickness for the razor and by flexing the blade to develop a retaining friction which is sufficient to prevent its accidental displacement at all itmes, as in preparing the razor for shaving or in flushing it after the shaving operation. The blade 20 is shown in Fig. 2 in its transversely curved condition of presentation. Similarly the used blade may be withdrawn by grasping the solid end of the blade where this is facilitated by the concave end edge of the retaining plate 14.

It is contemplated, however, that the razor herein shown may be more conveniently used when fresh sharp blades are supplied to it by a magazine which will now be described. Referring first to Figs. 13–17 it will be seen that the magazine comprises an elongated base plate 30 of rectangular outline provided centrally and symmetrically in its bottom with a rectangular well 31. From the bottom of this well projects an elongated blade-locating rib 33 and blade stops 34 and 35 which are arranged in alignment with the central rib 33, spaced equally from its ends and provided with triangular enlargements which are designed to fit the square sided enlargements 25 in the slots of the blades. The rib 33 as herein shown is of uniform cross section from end to end. The rib and stops 34 and 35 project substantially above the walls of the well 31 and are designed to locate and retain a stack of blades 20 arranged thereon in longitudinally staggered relation and with alternate blades reversed in the direction of their slot openings. The location of the blades in the stack is best shown in Fig. 5 in which it will be seen that the uppermost blade is located with its solid end between the stop 35 and the right end of the rib 33 with its slot opening toward the left, whereas, the second blade in the stack is located with its solid end between the stop 34 and the left end of the rib 33 with its slot opening toward the right, and so on.

The blades are somewhat shorter than the overall length of the well 31 so that when the stack is located as above explained there is an opportunity for a forked lifting spring to be forceably inserted beneath the assembled stack. The lifting spring 26 is shown in Fig. 17 as being longitudinally curved and slotted so that it may be pushed into the well 31 from either end, clear-

ing the blade-locating rib and stops and being finally retained in position by the end walls of the well. It will be understood that the blade stacks may thus be assembled on the base plate conveniently and without any tendency toward being displaced and then the spring **26** may be slipped into place after the loaded base plate is inserted in the magazine casing. The base plate is reduced in thickness at each end to provide transverse shoulders **28** and **29**. The base plate is provided in each side edge with a pair of recesses **32** into which the material of the magazine casing may be swaged to retain the two parts permanently in assembled relation.

The casing or shell **36** of the magazine comprises a metal tube of rectangular cross-section, as best shown in Figs. 7 and 11, and of such dimensions as to receive the base plate with a stack of blades **20** thereon and with the lifting spring **26** compressed to substantially horizontal position. The upper wall of the magazine casing is formed by a pair of inturned spaced flanges **37** and **38** which overlie the side portions of the blades **20** but leave a narrow central opening through which is exposed the central area of the particular blade which is uppermost in the stack. The upper edge of the rib **33** extends slightly into the spaces between the opposed edges of the flanges **37** and **38**. The outer corners of the flanges **37** and **38** are flared and are bent downwardly to form blade-engaging projections as shown in Fig. 11, that is to say, projections which engage the used blade upon the guard **11** of the razor and displace it initially when the magazine is brought into operative relation with the razor head as will be presently explained. After the casing has been assembled upon the base plate **30** depressions **43** are formed in its side walls which interlock with the recesses **32** above described. In the side walls of the casing elongated depressions are also formed which provide internal longitudinal ribs **39**. These ribs overlie and positively guide the guard bars **12** of the razor guard into contact with the shoulders **28** or **29** of the magazine.

The magazine casing is provided with a sliding feeding member **40** which embraces the sides of the casing **36** and is permanently connected to an internal flanged blade-engaging member **41**, the outer side edges of which run beneath the flanges **37** and **38** of the magazine casing **36**. Stop pins **42** are provided in the flanges **37** and **38** near opposite ends thereof to limit the travel of the feeder **40** so that at each extremity of its stroke it clears the solid end of the blades which are located inside the respective stops **34** and **35**. The rib **33** and stops **34** and **35** are of such height as to permit the solid end portion of a blade to pass above them in transversely bowed condition while the longitudinal edges of the blade pass beneath the flanges **37** and **38**.

In using the magazine above described it will be assumed that it is desired to eject and replace the blade shown in Fig. 8 as retained upon the guard **11** by the retaining plate **14**. The cap **16** having been first lifted, the guard and magazine are brought together as suggested in Fig. 8, that is to say the right-hand end of the guard is telescoped into the left-hand end of the magazine, that being the end of the magazine in which the open end of the uppermost blade in the stack is disposed. In this preliminary movement of engagement of the guard and magazine the downwardly deflected corners of the flanges **37** and **38** engage the shoulders of the blade and displace it toward the left upon the guard for a substantial distance, for example, for about one-fourth of its length but in any case far enough to locate the open-end of the blade well beneath the retaining plate **14** and in a position where the end edges of the blade are sandwiched between the retaining plate **14** and the blade-engaging face of the guard **11**. In this preliminary movement the internal ribs **39** of the magazine over-ride and guide the marginal guard bars of the guard as shown in Fig. 11, relative longitudinal movement being arrested by contact of the end of the guard with one or other of the shoulders **28** or **29**.

The feeding device **40** is now at the right-hand end of the magazine in a position beyond the end of the uppermost blade where it slightly depresses the second blade in the stack as shown in Fig. 16. It is now moved toward the left advancing the uppermost blade in the stack, which is lifted by the spring **26** above the rib **33** and stop **34**, with its open-end foremost into the opening between the right-hand end of the retaining plate **14** and the guard **11** beneath it. The entrance of the blade is facilitated, as already noted, by the flaring corners of the retaining plate and it has free passage beneath the plate without any obstruction until it encounters the right-hand end of the blade **20** which has already been displaced as above explained and as illustrated in Fig. 8. The contact between the two blades is made in substantially the location shown in Fig. 9, that is to say, in a location where the contacting ends of both blades are sandwiched between the retaining plate and the guard and consequently have no opportunity for vertical displacement which would result in one blade riding over the other and jamming. Movement of the feed slide **40** is continued until arrested by the pins **42** at the left-hand end of the magazine. When this occurs the blade **20** has been substantially ejected from the razor head and the new blade located in its place.

When the blade thus presented is to be ejected and the magazine used again it is reversed end for end. The reversal being necessary because the second blade in the stack has its open end directed away from the razor head as shown in Figs. 8 and 9 and because the feed slide has now been moved to the left-end of the magazine and positioned for delivery by movement toward the opposite end of the magazine.

It will be understood, of course, that the spring **26** pushes the stack of blades upwardly at all times and holds the uppermost blade in contact with the flanges **37** and **38** of the magazine casing where it may be moved endwise freely above the rib **33** and the stops **34** and **35**. The function of the triangular enlargement of the stops is to retain positively the second blade in the stack from longitudinal movement while the uppermost blade is being withdrawn. Otherwise the frictional engagement of the uppermost blade would tend to displace the second blade.

The user of the razor and magazine herein described may easily determine which end of the magazine should be brought into engagement with the razor, and to which end of the razor the new blade should be presented, by noting in which end of the magazine or razor is located the open end of the blade to be delivered or ejected.

The concave retaining plate **14** serves, by maintaining the blade always in flexed condition, to increase and hold its stiffness substantially con-

stant regardless of the cap position. Therefore, the cap may be adjusted freely to vary the edge exposure of the blade without danger of loosening it and permitting chatter or flutter of the shaving edge.

The novel safety razor which has been described and illustrated in the accompanying drawings is not claimed herein but forms the subject matter of my divisional application Serial Number 472,665 filed January 18, 1943.

The combination of the razor and magazine, described and illustrated in the drawings, forms the subject matter of my divisional application, Serial Number 480,639, filed March 26, 1943.

Having thus disclosed my invention and described in detail an illustrative embodiment thereof, I claim as new and desire to secure by Letters Patent:

1. The process of separating and feeding slotted open-end blades, which consists in stacking the blades with the slots of alternate blades opening in opposite directions and with alternate blades displaced longitudinally in the stack, thereby separating the superposed ends of the blades by the thickness of an interposed blade, and then withdrawing one by one the blades successively located uppermost in the stack and reversing the stack end-for-end between each withdrawal.

2. The process of separating and feeding slotted open-end blades, which consists in stacking the blades by sliding them alternately upon opposite ends of an upstanding slot-receiving projection, arranging the stacked blades in longitudinally staggered relation, thereby separating the superposed ends of the blades by the thickness of an interposed blade, and then turning the stack end-for-end and before each reversal of the stack withdrawing the blade which is uppermost therein.

3. A magazine for safety razor blades, comprising a base plate having an upstanding blade-locating rib of uniform cross-section from end to end, stops in alignment with the rib and having portions wider than the rib, a casing enclosing the base plate and being open above the rib in a narrow space, and a stack of slotted open-end blades mounted on the rib and each having an aperture to receive one only of said stops.

4. A magazine for safety razor blades, comprising an elongated casing of rectangular cross-section having a central rib of uniform cross-section terminating substantially in a central opening in the top of the casing, a wider stop spaced from each end of the said rib, and a stack of slotted open-end blades arranged in alternate directions on the rib and each having a wide aperture in which is received one of said wider stops.

5. A magazine for safety razor blades, comprising an elongated casing of rectangular cross-section having a central rib of uniform cross-section terminating substantially in a central opening in the top wall of the casing, a stop having a straight transverse wall wider than the rib spaced symmetrically outside each end of the rib, and a stack of slotted open-end blades arranged on said rib with the solid ends of alternate blades abutting the transverse wall of one of the respective stops.

6. A magazine for safety razor blades, comprising an elongated casing having exit openings at both ends, a centrally disposed internal blade-locating rib, an internal transverse shoulder providing a razor stop spaced between each end of the rib and the corresponding exit opening, and a blade-feeding device movable longitudinally within the said casing above the said rib.

7. A magazine for safety razor blades, comprising an elongated casing, a base plate retained within the casing and having a centrally disposed well therein with a blade-locating projection, a stack of slotted blades mounted on said projection, and a leaf spring in the well beneath the stack in a position accessible from outside the casing where it may be inserted after the base plate and blade stack have been located in the casing.

8. In a blade magazine the combination of a casing of rectangular cross-section with a complete blade-carrying unit comprising a base plate having blade-locating means, a stack of slotted blades thereon, walls forming a recess in the base plate beneath the blade stack, and a leaf spring in said recess accessible from without the casing, whereby the spring may be inserted in the recess after the blade-carrying unit has been assembled in the casing.

9. A magazine for thin slotted safety razor blades, comprising an elongated casing of substantially rectangular cross section with exit openings at both ends, a centrally disposed blade-locating rib projecting from the bottom of the casing and having two spaces therein located equal distances within the ends of the rib, whereby slotted blades may be stacked upon the rib with alternate blades displaced longitudinally and with the end portions of alternate blades occupying alternate spaces in said rib, thus having their superposed ends at both ends of the blade stack separated by the thickness of an interposed blade.

NICHOLAS TESTI.