United States Patent [19]

Nemeth

[11] **Patent Number: Des. 309,607**

[45] **Date of Patent: ** Jul. 31, 1990**

[54] **ADJUSTABLE COPY HOLDER FOR COMPUTERS**

[75] Inventor: **Bradley M. Nemeth**, San Francisco, Calif.

[73] Assignee: **Wendell R. Brooks, Inc.**, Ft. Worth, Tex.

[**] Term: **14 Years**

[21] Appl. No.: **384,455**

[22] Filed: **Jul. 24, 1989**

[52] **U.S. Cl.** **D14/114**; D19/88; D19/90

[58] **Field of Search** D14/100, 106, 113, 114, D14/115; D8/373, 380, 381; 248/917-925, 447.1, 300, 121, 442.2, 475.1, 447, 441.1, 122, 123.1, 127, 126, 176, 152, 201, 277; 211/86, 119.12; D19/86, 88; D6/512, 567, 419, 449; 24/455, 488, 67.1, 67.5; 40/341, 358, 354

[56] **References Cited**

U.S. PATENT DOCUMENTS

D. 301,044	5/1989	Judd	D19/86 X
4,568,052	2/1986	Solomon et al.	248/447 X
4,569,498	2/1986	Ermanski	248/447.1 X
4,747,572	5/1988	Weber	248/442.2
4,801,120	1/1989	Gregoire	248/441.1

OTHER PUBLICATIONS

Global Computer Supplies, 1986, p. 58, Electric Copy Holder Computer Box.

Primary Examiner—Susan J. Lucas
Assistant Examiner—Freda S. Nunn
Attorney, Agent, or Firm—James E. Bradley

[57] **CLAIM**

The ornamental design for a adjustable copy holder for computers, as shown and described.

DESCRIPTION

FIG. **1** is a rear perspective view of an adjustable copy holder for computers showing my new design;
FIG. **2** is a front perspective view thereof;
FIG. **3** is a top plan view thereof on an enlarged scale;
FIG. **4** is a bottom plan view thereof on an enlarged scale;
FIG. **5** is a back elevational view thereof on an enlarged scale;
FIG. **6** is an inverted front elevational view thereof on an enlarged scale;
FIG. **7** is a right side elevational view thereof on an enlarged scale as seen in FIG. **2**;
FIG. **8** is a left side elevational view thereof on an enlarged scale as seen in FIG. **2**.

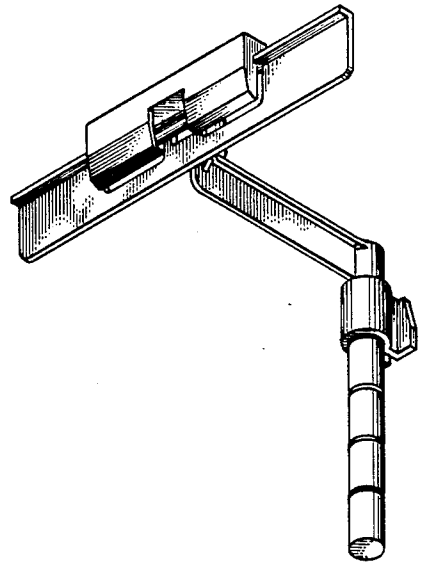

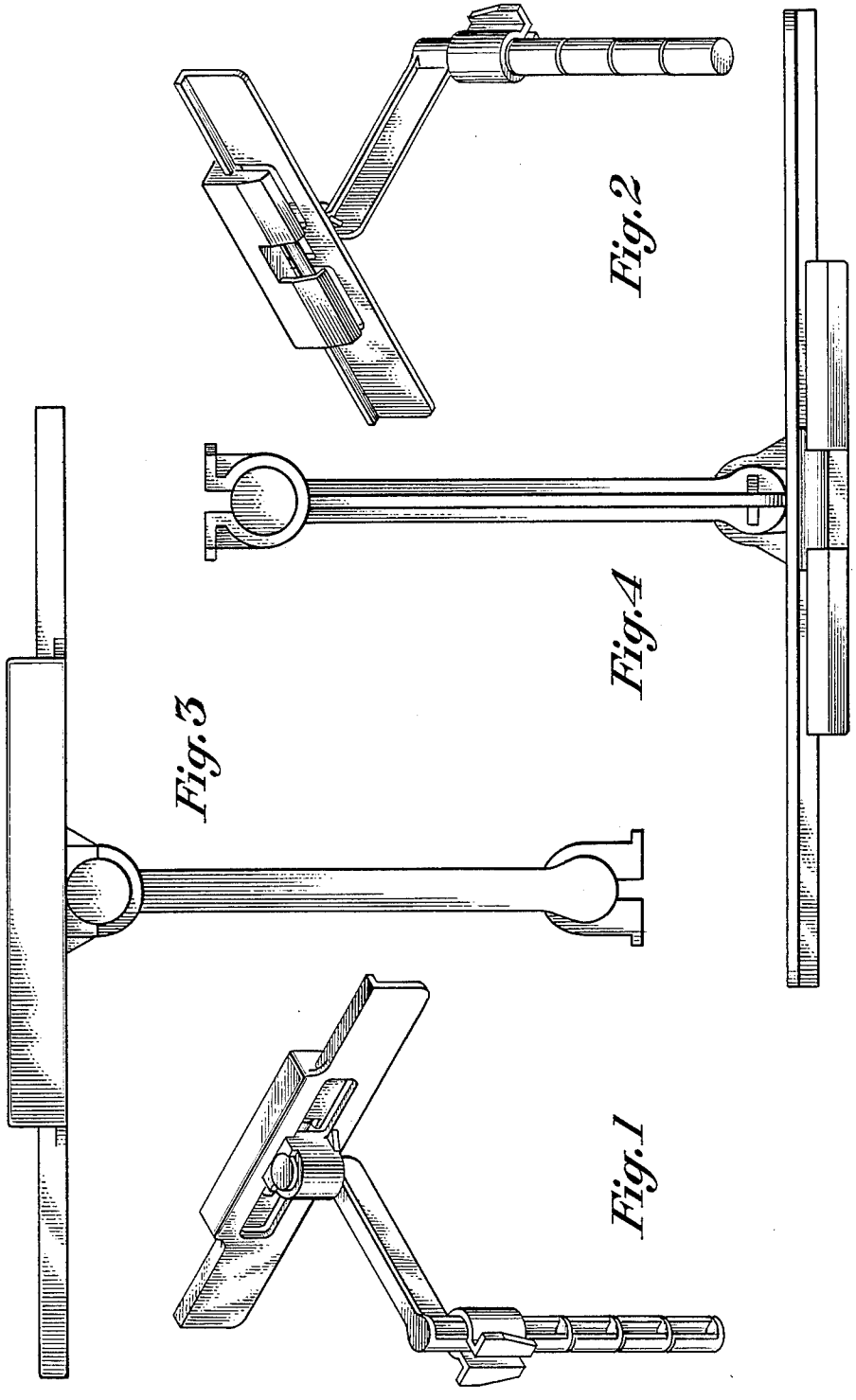

Fig. 2

Fig. 4

Fig. 3

Fig. 1

Fig. 6

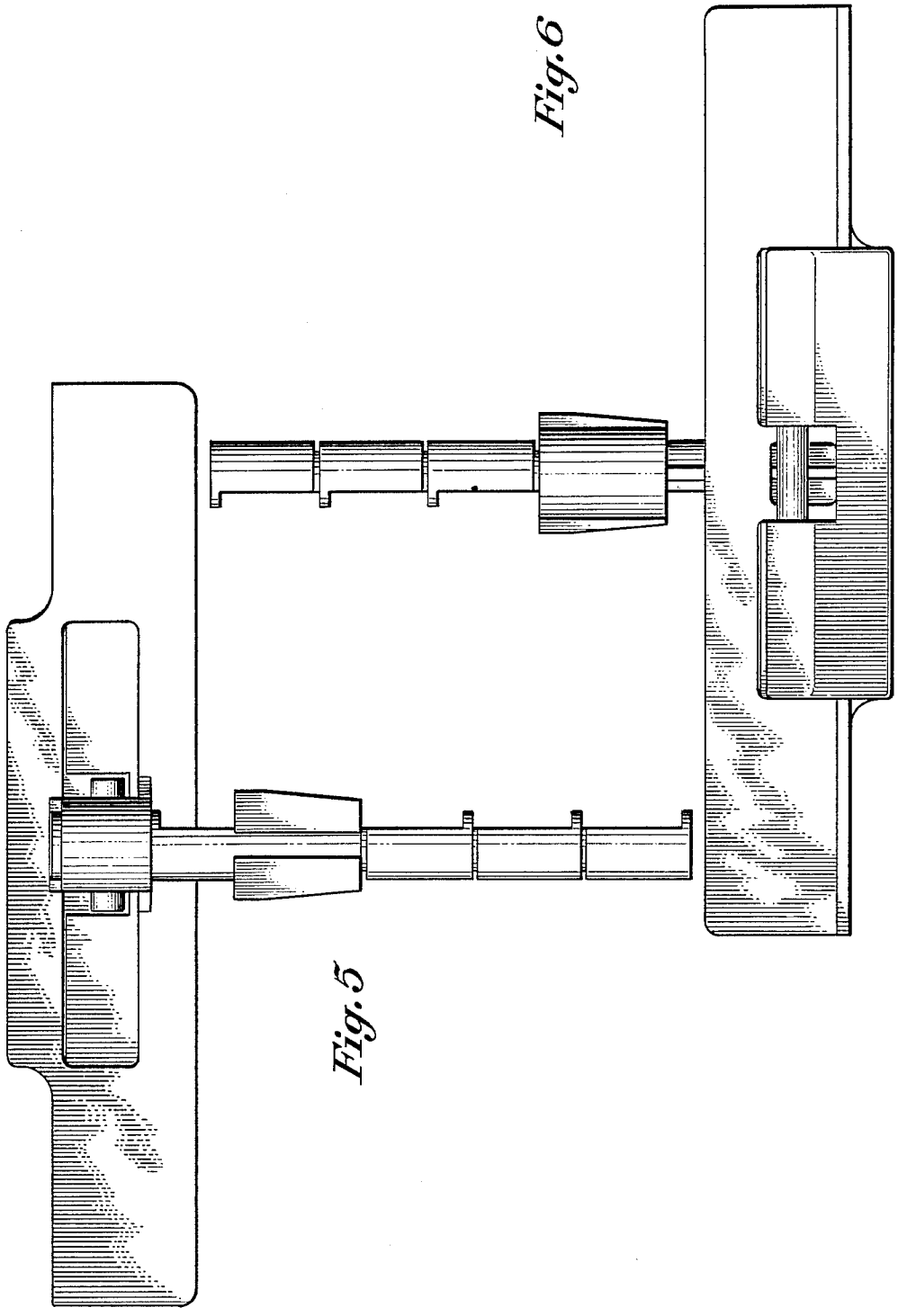

Fig. 5

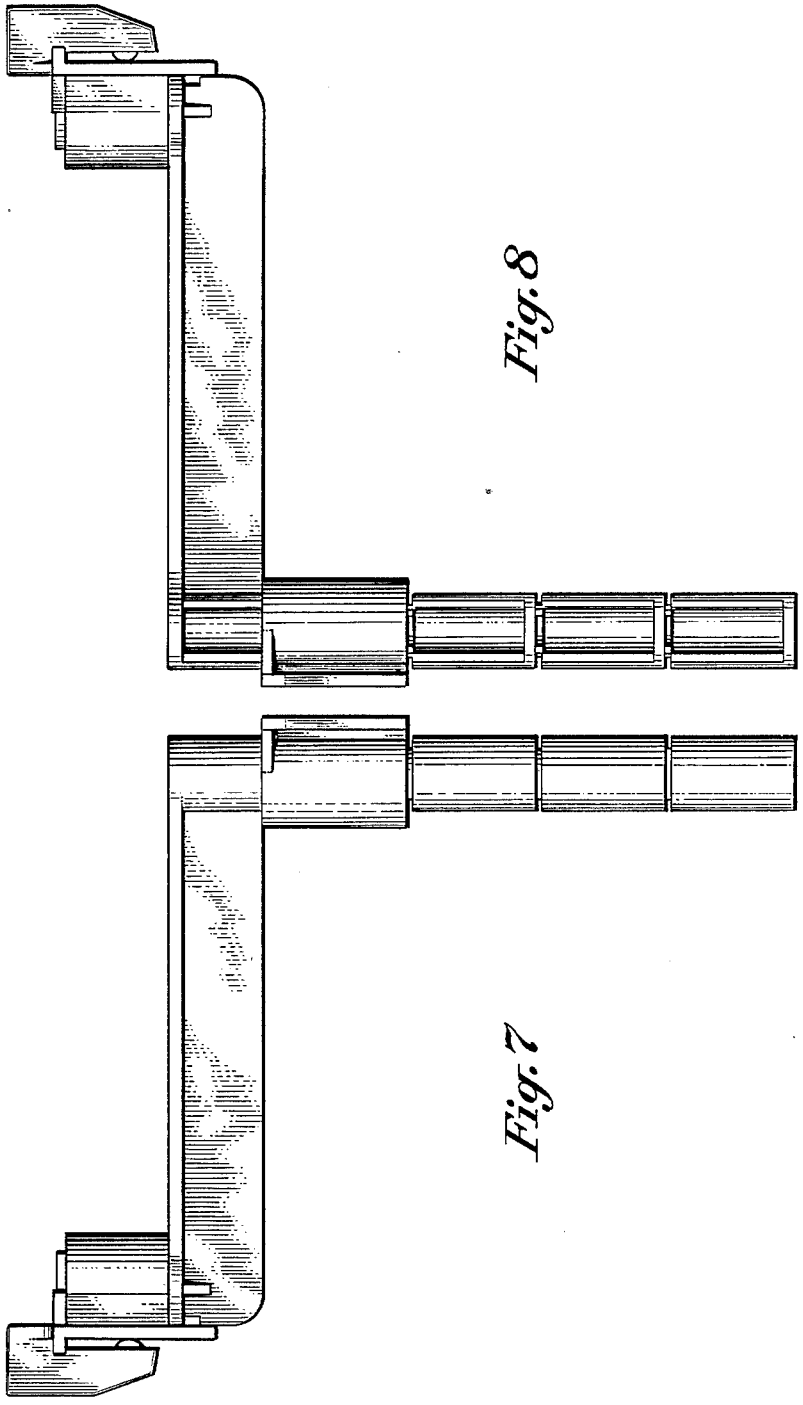

Fig. 8

Fig. 7