Oct. 18, 1932. E. H. ANGIER ET AL 1,882,714

COLORING SHEET MATERIAL

Filed April 3, 1929

Fig. 2.

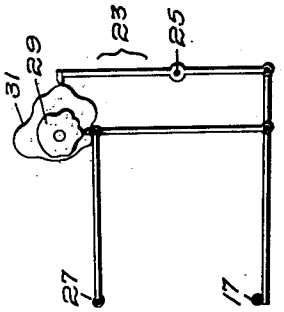

Fig. 3.

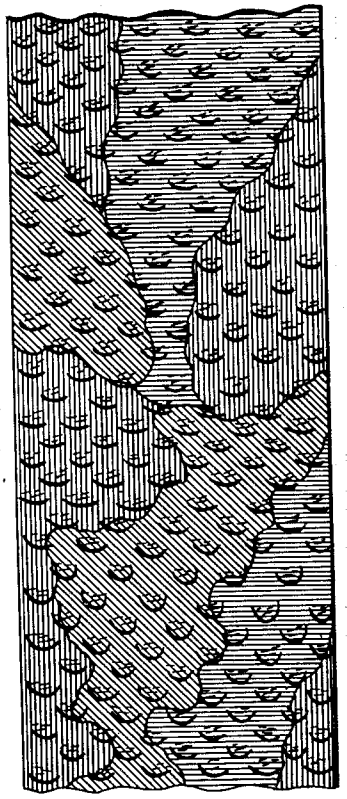

Fig. 1.

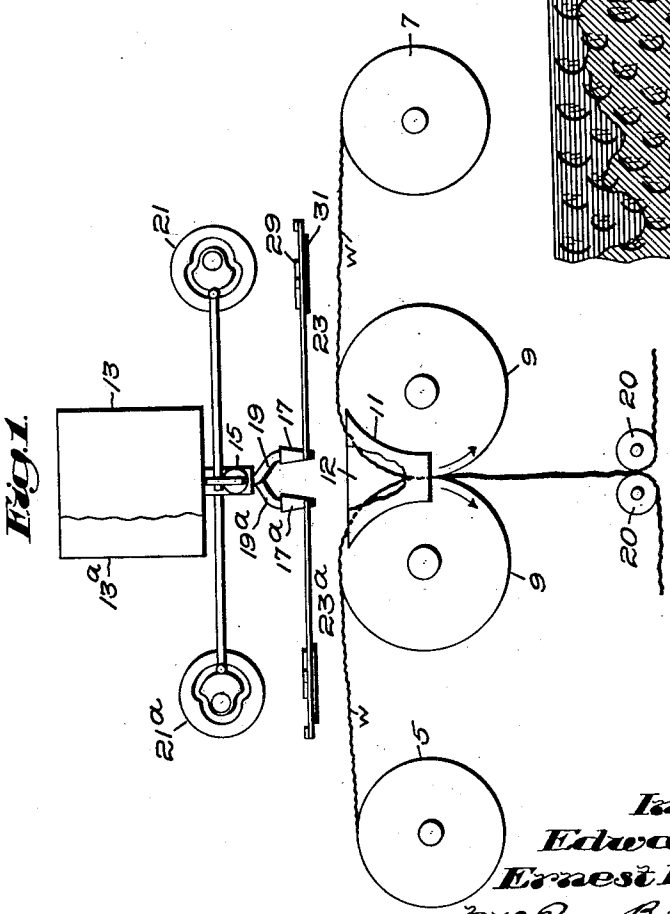

Inventors:
Edward H. Angier
Ernest R. Dearborn
by Emery, Booth, Varney & Townsend
Attys

Patented Oct. 18, 1932 1,882,714

UNITED STATES PATENT OFFICE

EDWARD H. ANGIER, OF FRAMINGHAM, AND ERNEST R. DEARBORN, OF ASHLAND, MASSACHUSETTS; SAID DEARBORN ASSIGNOR TO SAID ANGIER

COLORING SHEET MATERIAL

Application filed April 3, 1929. Serial No. 352,132.

This invention relates to coloring sheet material such as paper and in its more specific aspect to the coloring of craped paper, and while not limited thereto finds a particular application in the production of a mottled, marbled or otherwise variegated effect.

Our invention will be well understood by reference to the following description taken in connection with the accompanying drawing showing by way of example an apparatus by means of which our invention may be practised. In the drawing:—

Fig. 1 is a diagrammatic end elevation of the apparatus;

Fig. 2 is a fragmentary plan view of a mechanism for oscillating the color applying means; and

Fig. 3 is a diagrammatic plan view of a small portion of craped paper exemplifying the product, conventionally lined for color.

The process involved in our invention may be most readily understood by a description of the particular mechanism illustrated in the drawing. Referring to Fig. 1 thereof, the material is conveniently treated in the form of a long web or mill roll, and two of these webs *w* are provided on the supply rolls 5 and 7 and are led over and down between a pair of rolls 9 in downwardly converging paths meeting at the bite of the rolls to form an upwardly presented trough or furrow. The rolls 9 may be driven as indicated by the arrows to advance the webs therethrough. Suitable closure means 11 may be provided at the ends of the rolls to form end walls for the trough. Coloring material may be applied to the webs in advance of their line of contact at the bite of the roll by discharging it on one or more of the same where they converge to form the trough. For this purpose paints, pyroxylin lacquers, dyes or bronzes may be used and, if desired, several colors may be applied simultaneously. This is herein diagrammatically illustrated by the showing of two tanks 13 and 13*a* which discharge to the trough between the webs of paper through valved outlets 15 to which are connected nozzles 17 by means of suitable flexible connections 19, the purpose of which latter will hereinafter be described. Where desired, different colors may be confined to different areas of the paper by means of narrow dams 12 fitted into the trough and making close contact with the paper down to the bite of the rolls. As the paper with the coloring media applied thereto passes through the rolls, the color is evenly spread out and pressed into the fabric of the paper and, to a degree, each web offsets on the other. At the discharge side of the rolls the webs are separated and each is colored on what was the inner side.

Among the factors which influence the result are the nature of the coloring medium and of the paper being treated, the time of application of the former and the volume supplied, and the time of separating the webs after their passage through the rolls. Thus colors carried in a volatile vehicle, if applied some distance before the two webs come in contact with one another, have time to set to a certain degree forming distinct lines of separation or designs, and such a design may offset with considerable regularity on the opposing web. In the case of colors which readily bleed and it is desired to prevent this, the colors may be applied in this manner. On the other hand, if the color is permitted to accumulate in a small pool at the trough or is applied in generous quantities, blending ensues. If the two sheets are immediately separated after passing between the rolls, the colors, generally speaking, have distinct lines of separation. On the other hand, if left face to face until dry, the vehicle in evaporating passes across the width of the sheets, causing the different colors to blend together in greater degree, this blending working in the direction in which the fumes of the vehicle happen to pass. The relative-

ly prolonged maintenance of the webs in contact is illustrated diagrammatically in Fig. 1, wherein we have shown the webs as remaining in contact until after passing guide rollers 20. Certain media acting on a relatively permeable sheet of paper cause the color to strike through the same, giving the same pattern or color scheme on both sides if supplied in sufficient quantity and allowed to operate for a sufficient time. On the other hand, the transmission of color through the paper may be prevented. For instance, in the case of webs of paper duplexed with asphalt, obviously the asphalt coating between the two layers prevents the color striking through from one to another. We mention a few of the conditions which may be taken into account in practice without pretending to be exhaustive.

Craped paper, especially paper in the nature of craped kraft, has hitherto been difficult to color on account of the irregular surface provided by the crapings. In Fig. 1 we have indicated the webs being treated as being formed of craped paper by showing them as a wavy line. In treating craped paper in the manner described the crapings apparently are flattened out in the narrow zone at the bite of the rolls where the two sheets are forcibly pressed together in face to face contact so that the color is applied uniformly, but at the same time, presumably because of the localized nature of this pressing, the crapings expand again to their original form as they pass the rolls and are not destroyed or permanently ironed out. It is desirable to use a non-aqueous vehicle for the colors or to minimize the amount of water used to avoid partial pulping of the paper which may permit the crapings to be impaired by the pressure of the rolls.

To provide a variegated effect in the finished product one or more colors may be irregularly applied either to form designs or in a capricious and haphazard manner. In the example shown the nozzles by virtue of their flexible connection at 19 with the supply tanks may be moved to direct the coloring liquid to different locations on the paper and one or another of the colors may be shut off temporarily by means of the valves 15. This, of course, may be effected by hand. In the drawing we have illustrated automatic mechanism in which each valve 15 is operated by a suitable cam 21. The nozzle 17 may be given universal movement in a horizontal plane by means (see Fig. 2) of linkwork 23 pivoted at the fixed points 25 and 27 and operated by the two edge cams 29 and 31. In the example thus shown the mechanism, of course, goes through a regular cycle and the application of the colors to the paper in general produces a repeat design. If, however, a generous quantity of liquid is supplied, the passage of the paper through the rolls causes a pleasing variance.

When applied to craped paper the method herein disclosed and claimed is a specific example of the method more generically disclosed and claimed in our copending application Serial No. 399,054, filed Oct. 11, 1929. The resultant craped and vari-colored product is likewise disclosed and claimed in that application.

We are aware that the invention may be embodied in other specific forms without departing from the spirit or essential attributes thereof, and we therefore desire the present embodiment to be considered in all respects as illustrative and not restrictive, reference being had to the appended claims rather than to the foregoing description to indicate the scope of the invention.

We claim:

1. The method of coloring craped paper comprising applying a coloring medium thereto, and temporarily and locally flattening the craping thereof.

2. The method of coloring craped paper comprising applying a coloring medium thereto, and progressively locally and temporarily flattening the craping thereof.

3. The method of producing colored paper and the like comprising guiding two sheets of paper into contact in downwardly converging paths to provide an open trough, supplying coloring medium to the trough to accumulate therein, feeding the paper and separating the sheets at a location past the trough.

4. The method of producing variegated paper and the like comprising guiding two sheets of paper into contact in downwardly converging paths to provide an open trough, irregularly discharging coloring medium to the trough to accumulate therein, feeding the paper and separating the sheets at a location past the trough.

5. The method of coloring craped paper which comprises feeding two sheets through suitable mechanism adapted to force them into substantially line contact which temporarily flattens the crapings, supplying coloring matter between them in advance of the line of contact and then separating the sheets.

6. Mechanism for producing colored paper comprising a pair of horizontal rolls, each adapted to receive a paper web on the upper surface thereof and down between which the webs may feed, and supply means for coloring medium discharging to the trough defined between such rolls.

7. Mechanism for producing colored paper comprising a pair of horizontal rolls, each adapted to receive a paper web on the upper surface thereof and down between which the webs may feed, and means to deliver coloring medium into the trough defined between such

rolls having provision for varying the location of discharge thereto.

8. The method of coloring paper which comprises feeding two webs through suitable mechanism adapted to force them into substantially line contact, supplying coloring matter between them in advance of the line of contact, maintaining the portions of the webs so treated in contact for a time after their passage through said mechanism to permit mutual interaction, and then separating the webs.

In testimony whereof, we have signed our names to this specification.

EDWARD H. ANGIER.
ERNEST R. DEARBORN.