H. A. DOUGLAS.

ELECTRIC LAMP.

APPLICATION FILED MAR. 20, 1912.

1,068,331. Patented July 22, 1913.

Fig. 1.

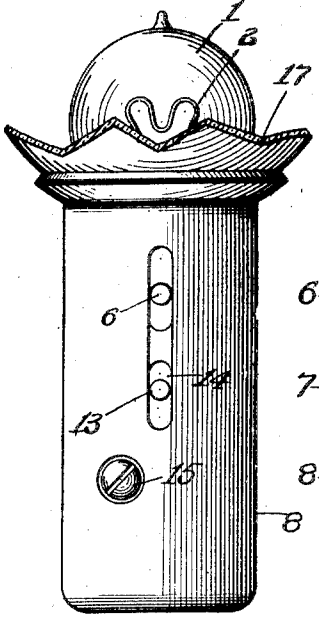

Fig. 2.

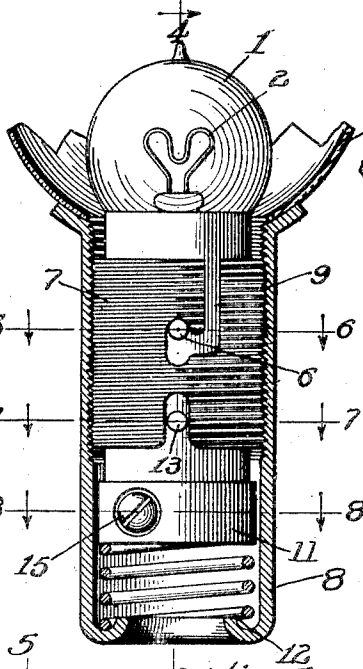

Fig. 3.

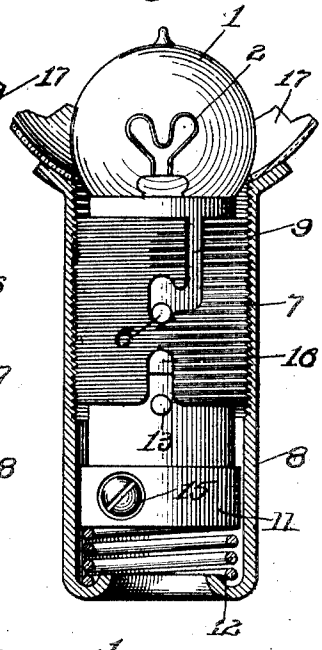

Fig. 4

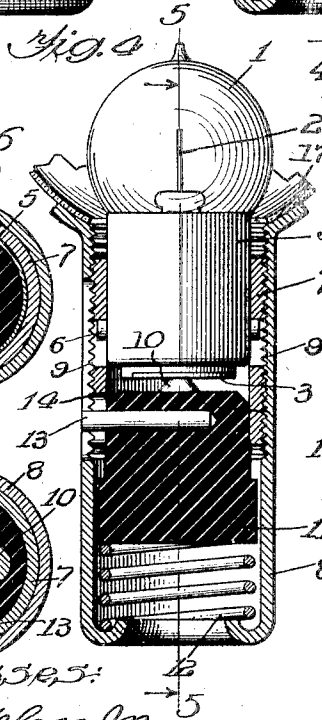

Fig. 5

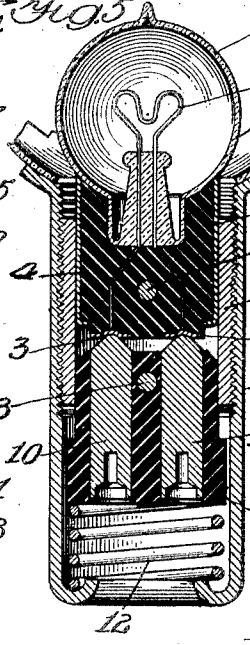

Fig. 6

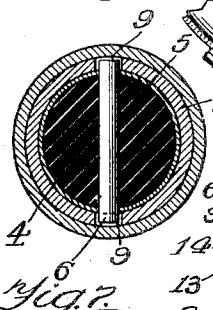

Fig. 7.



Fig. 8

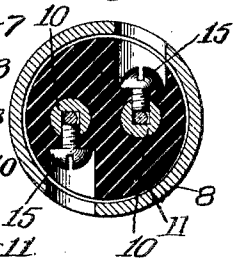

Witnesses:

Jno. A. Nelson Jr.

Edwin B. Nelson

Inventor:

Harry A. Douglas

By. A. L. Gregg Atty.

UNITED STATES PATENT OFFICE.

HARRY A. DOUGLAS, OF CHICAGO, ILLINOIS.

ELECTRIC LAMP.

1,068,331. Specification of Letters Patent. Patented July 22, 1913.

Application filed March 20, 1912. Serial No. 685,023.

To all whom it may concern:

Be it known that I, HARRY A. DOUGLAS, citizen of the United States, residing at Chicago, in the county of Cook and State of Illinois, have invented a certain new and useful Improvement in Electric Lamps, of which the following is a full, clear, concise, and exact description, reference being had to the accompanying drawings, forming a part of this specification.

My invention relates to electric lamps and has for one of its objects the provision of improved mechanism whereby circuit connections with the lamps may readily be effected.

My invention is also of service in connection with those electric lamps which are to be brought into focus with some light distributing elements, such as reflectors.

When my invention is thus embodied, improved means are present whereby the lamps may readily be focused.

I will explain the various characteristics of my invention by reference to the accompanying drawing showing the preferred embodiment thereof, to which embodiment I do not wish to be limited, and in which drawing—

Figure 1 is a side view of a lamp structure made in accordance with the invention, the reflector forming a part of the structure being only partially shown; Fig. 2 is a view similar to Fig. 1, excepting that the reflector portion and an inclosing shell are shown in section; Fig. 3 is a view similar to Fig. 2 showing some of the parts in different positions; Fig. 4 is a view on line 4 4 of Fig. 2, some of the parts being shown in full elevation; Fig. 5 is a sectional view on line 5 5 of Fig. 4; Fig. 6 is a sectional view on line 6 6 of Fig. 2; Fig. 7 is a sectional view on line 7 7 of Fig. 2; and Fig. 8 is a sectional view on line 8 8 of Fig. 2.

Like parts are indicated by similar characters of reference throughout the different figures.

The lamp bulb 1 incloses a lighting filament 2 which is connected with terminals 3 3 upon the exterior of the bulb, these terminals being mounted upon an insulating base 4 that also constitutes a mounting for the lamp bulb 1. The mounting base 4 is desirably provided with a metallic sheath 5, a pin 6 projecting diametrically through the mounting base 4 and extending beyond the sheath 5 upon both sides as illustrated clearly in Figs. 4 and 6. The ends of the pin 6 constitute elements of bayonet catches, the complemental elements of such catches being formed in a threaded sleeve 7 that is in threaded engagement with the threaded interior of a containing shell 8. The base 4 of the lamp may be slipped within the sleeve 7 when the projecting ends of the pin 6 are placed in vertical alinement with the vertical branches of the bayonet slots 9. When the outer ends of the pin 6 are in engagement with the bayonet slots 9, the shell 7 may be turned for the purpose of withdrawing the lamp or locating it in position. In the embodiment of the invention illustrated, to which embodiment I do not wish to be limited, the pin 6 has to be in engagement with depressions in the bayonet slot as indicated in Fig. 3, when the lamp and sleeve 7 are to be turned.

The terminals 3 of the lamp are in the form of elongated parallel contact plates, as indicated in Figs. 4 and 5, these plates being engaged by terminal posts 10 when the lamp is to be adapted for inclusion in circuit. The terminal posts 10 are carried by a plunger 11 located within the shell 8, this plunger being upwardly spring pressed by means of a coiled spring 12 interposed between the inturned base of the shell 8 and said plunger. The plunger is desirably prevented from rotation by means of an outsetting pin 13 carried thereby, this pin working within a vertical slot 14 provided in the shell 8. The terminal posts 10 are made hollow at their bases by means of axially disposed recesses that are designed to receive the ends of current conducting wires for bringing about circuit association of the lamp with a suitable source of current, binding screws 15 passing partially through the posts 10 and being adapted for clamping engagement with the wires introduced into the bases of said posts as will be readily understood by particular reference to Figs. 5 and 8.

When the lamp is to be placed in circuit connection with the posts 10, the plane in which these posts lie should extend across the contact plates 3, as indicated in Fig. 5, the plates 3 being sufficiently separated so that neither of them can be engaged with the two posts at the same time, whereby short circuiting is avoided. In order that the person who is manipulating the lamp may know whether or not the posts 10 are in

engagement with the plates 3, I provide a structural characteristic that serves to convey an indication to the manipulator, this structural characteristic residing in a recess 16 extending upwardly from the lower margin of the sleeve 7, the pin 13 rising slightly within the slot or recess 16 upon the completion of each revolution of the sleeve 7, the spring 12 causing this result. When the pin 13 so rises the manipulator knows that the posts 10 are in contact with the plates 3. If the lamp has not been inserted to a sufficient extent within the shell 8 its base 4 may be further turned until the pin 13 is again slightly raised within the slot 16, this operation being continued until the sleeve 7 has been sufficiently inserted within the shell 8, the posts 10 in riding over the contact plates 3 keeping the contacting surfaces of the plates and posts bright whereby good circuit contacts are assured between said posts and plate.

When downward pressure upon the lamp 1 is removed (this downward pressure continuing during the time the sleeve 7 is being turned to hold the pin 6 in the position illustrated in Fig. 3) the pin 13 being in alinement with the slot 16, the spring 12 distends and forces the pin 13 upwardly into the slot 16 and forces the ends of pin 6 into engagement with the locking portions of the bayonet slots 9. The lamp is thus held from rotation by the operation of the spring 12, the pin 6 and the locking portions of the bayonet slots engaging said pins, the contact plates being in individual contact with the posts 10. The contact posts are instantly held from rotation by the pin 13 and the slot 14, as has been described. The pin 13 serves an additional function, when engaging the slot 16 upon the release of the lamp 1, which is to hold the sleeve 7 from rotation; a result which is accomplished by the reception of the pin 13 within the slot 16. In this way the contact plates 3 are held in connection with the posts 10, the pin 6 serving merely to prevent rotation of the lamp with respect to the sleeve 7. The shell 8 carries a reflector 17, only partially shown for the lack of space, with respect to which reflector the lamp 1 may readily be focused by the construction which has been described.

It will be observed that the lamp is adjustable from within the reflector rather than upon the exterior thereof and rather than upon the exterior of the shell inclosing parts of the lamp structure.

While I have herein shown and particularly described the preferred embodiment of my invention, I do not wish to be limited to the precise details of construction shown as changes may readily be made without departing from the spirit of my invention.

Having thus described my invention, I claim as new and desire to secure by Letters Patent the following:—

1. An electric lamp structure including a shell; a sleeve in threaded engagement with the interior of the shell and provided with a bayonet slot; a lamp provided with a base; a pin carried by the lamp base and adapted for engagement with said bayonet slot; a pair of contacts carried upon the bottom of the base; a plunger below the lamp base and located within the shell; contact posts adapted for connection with circuit wires and carried by said plunger; a pin projecting from said plunger, there being a slot in the shell with which the latter pin engages for preventing the rotation of the plunger, said sleeve being provided with a slot in its lower portion for engaging said pin to prevent the rotation of the sleeve; and a spring interposed between the bottom portion of the shell and said plunger, the aforesaid bayonet slot and the pin for engaging it being so related to the slot in the lower portion of the sleeve and the pin in engagement with said slot as to maintain engagement between said contacts and posts, the aforesaid bayonet slot having a lower depression to enable the bayonet slot engaging pin to engage the sleeve for the purpose of effecting the rotation of said sleeve.

2. An electric lamp structure including a shell; a sleeve in threaded engagement with the interior of the shell and provided with a bayonet slot; a lamp provided with a base; a pin carried by the lamp base and adapted for engagement with said bayonet slot; a pair of contacts carried upon the bottom of the base; a plunger below the lamp base and located within the shell; contact posts adapted for connection with circuit wires and carried by said plunger; a pin projecting from said plunger, there being a slot in the shell with which the latter pin engages for preventing the rotation of the plunger, said sleeve being provided with a slot in its lower portion for engaging said pin to prevent the rotation of the sleeve; and a spring interposed between the bottom portion of the shell and said plunger, the aforesaid bayonet slot and the pin for engaging it being so related to the slot in the lower portion of the sleeve and the pin in engagement with said slot as to maintain engagement between said contacts and posts.

3. An electric lamp structure including a lamp bulb having a base which carries lamp terminal contacts; a shell inclosing said base, there being a threaded structure intervening between the lamp and shell whereby the lamp may be moved in and out upon being turned with respect to the shell; a plunger within the shell and disposed between said base and the end of the shell opposite to that end where the lamp bulb is disposed; a pair of contact posts adapted

for connection with current conducting wires and carried by said plunger; a spring inclosed by the shell and in engagement therewith and with the plunger for forcing the contact posts into engagement with the contacts carried by the lamp base; and means for holding the lamp base and plunger from relative rotation when said posts are in engagement with the contacts carried by the lamp base.

4. An electric lamp structure including a lamp bulb having a base which carries lamp terminal contacts; a shell inclosing said base, there being a threaded structure intervening between the lamp and shell whereby the lamp may be moved in and out upon being turned with respect to the shell; a plunger within the shell and disposed between said base and the end of the shell opposite to that end where the lamp bulb is disposed; a pair of contact posts adapted for connection with current conducting wires and carried by said plunger; and a spring inclosed by the shell and in engagement therewith and with the plunger for forcing the contact posts into engagement with the contacts carried by the lamp base.

5. An electric lamp structure including a lamp bulb having a base which carries lamp terminal contacts; a shell within which the lamp base may be moved to vary the extent to which the lamp base is received within the shell, there being means for holding the lamp base in various positions within the shell; a plunger within the shell and disposed between said base and the end of the shell opposite to that end where the lamp bulb is disposed; a pair of contact posts adapted for connection with current conducting wires and carried by said plunger; and a spring inclosed by the shell and in engagement therewith and with the plunger for forcing the contact posts into engagement with the contacts carried by the lamp base.

6. An electric lamp structure including a lamp bulb having a base which carries lamp terminal contacts; a shell inclosing the lamp base, there being a threaded structure intervening between the lamp and shell whereby the lamp may be moved in and out upon being turned with respect to the shell; a plunger within the shell and disposed between said base and the end of the shell opposite to that end where the lamp bulb is disposed; a pair of contact posts adapted for connection with current conducting wires and carried by said plunger; and a spring inclosed by the shell and in engagement therewith and with the plunger for forcing the contact posts into engagement with the contacts carried by the lamp base.

7. An electric lamp structure including a lamp bulb having a base which carries lamp terminal contacts; a shell inclosing the lamp base, there being a threaded structure intervening between the lamp and shell whereby the lamp may be moved in and out upon being turned with respect to the shell; a plunger within the shell and carrying contacts adapted to be engaged with the aforesaid contacts; and a spring for pressing the plunger toward the lamp base to effect engagement between the contacts carried by the plunger and the contacts carried by the lamp base.

8. An electric lamp structure including a lamp bulb; a shell within which the base of the lamp bulb projects, there being a threaded structure intervening between the lamp and shell whereby the lamp may be moved in and out upon being turned with respect to the shell, the lamp bulb being thus adjustable longitudinally of the shell; and mechanism operating within said shell for holding the lamp bulb in differing positions with respect to the shell.

9. An electric lamp structure including a shell; a reflector supported thereby; a lamp bulb whose base is received with the shell, there being a threaded structure intervening between the lamp and shell whereby the lamp may be moved in and out upon being turned with respect to the shell, the lamp bulb being thus adjustable longitudinally of said shell, it being accessible from within the reflector for the purpose of its adjustment with respect to the shell and with respect to the reflector; and mechanism operating within the shell for holding the lamp bulb in differing positions with respect to the shell.

10. An electric lamp structure including a lamp bulb having a contact carrying base; a shell; an element in threaded connection with the shell and receiving the lamp base, this element by being rotated with respect to the shell effecting focal adjustment of the lamp; and means for holding the threaded element from rotation with respect to the shell to maintain focal adjustment of the lamp, said lamp being movable longitudinally of the threaded element and then serving to operate upon said means to break the fixed relation of the threaded element and shell to permit of rotation of the threaded element to effect focal adjustment of the lamp.

In witness whereof, I hereunto subscribe my name this fourteenth day of March A. D., 1912.

HARRY A. DOUGLAS.

Witnesses:
E. L. WHITE,
G. L. CRAGG.