March 12, 1940. L. L. TAYLOR 2,193,211

DISPENSING APPARATUS

Filed Jan. 26, 1938

Fig. 1

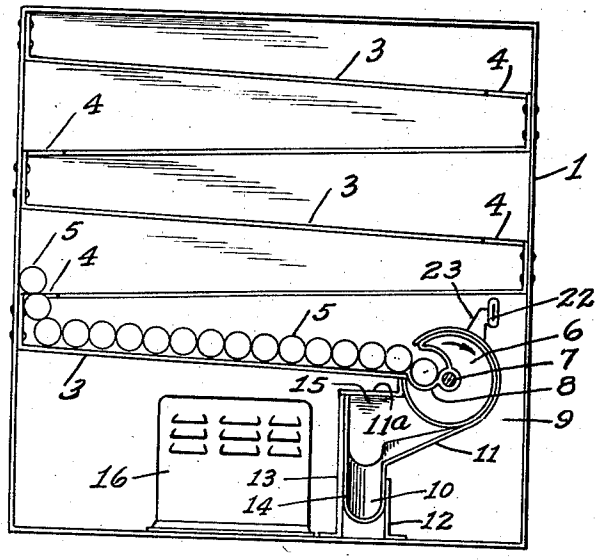

Fig. 2

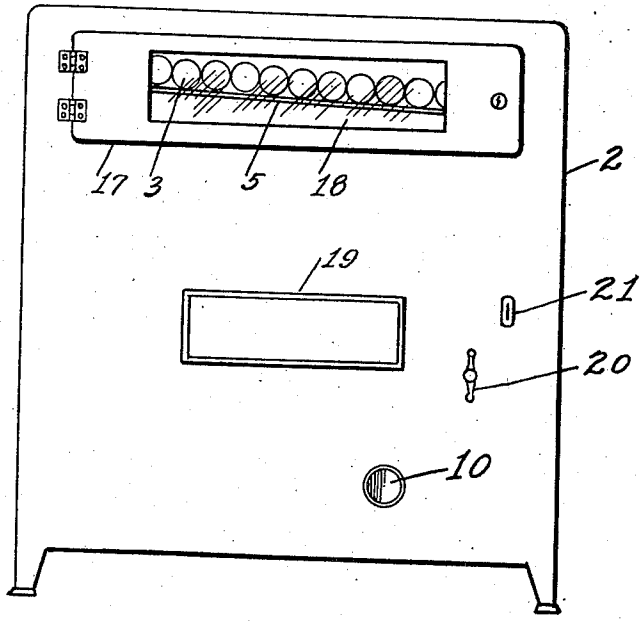

INVENTOR.
LAMOND L. TAYLOR

BY Langson Mann

ATTORNEY.

Patented Mar. 12, 1940 2,193,211

UNITED STATES PATENT OFFICE

2,193,211

DISPENSING APPARATUS

Lamond L. Taylor, Tucson, Ariz., assignor to Williams Oil-O-Matic Heating Corporation, Bloomington, Ill., a corporation of Illinois

Application January 26, 1938, Serial No. 186,953

1 Claim. (Cl. 312—36)

This invention relates to dispensing apparatus, and more particularly to an apparatus of this character wherein it is desired to contain and dispense packaged liquid goods which are of a nature that require a cool temperature to prevent spoiling.

It is an object of this invention to provide a device of the character specified which will store a quantity of the packages above the delivery opening and advance them by gravity to a dispensing closure which will discharge one package at a time. It is a further object of this invention, if so desired, to control the operation of the dispensing closure by coin-operated mechanism whereby the depositing of a coin therein will free an operating handle to discharge one package and then require the depositing of another coin to discharge the next package.

With these and other objects in view, reference is made to the accompanying sheet of drawings which illustrates a preferred embodiment of this invention with the understanding that minor changes may be made therein without departing from the scope thereof.

In the drawing:

Figure 1 is a view in front elevation of a preferred form of this invention with the casing therefor removed.

Figure 2 is a view in front elevation as Figure 1 will appear when mounted within its casing.

While it is preferable to mount the improved dispensing and cooling apparatus contemplated by this invention upon a rectangular frame 1 adapted to be supported within and surrounded by a casing 2, yet this invention also contemplates the mounting of the dispensing and cooling apparatus upon the bottom and sides of the casing 2 without departing from the scope of this invention.

This dispensing apparatus is designed primarily for storing and dispensing such liquids as milk, soft drinks, beer and the like which are contained in cylindrical bottles or cans and which are capable of progressing by gravity over inclined surfaces. As shown in Figure 1, a plurality of shelves or supports 3 are secured at their opposite ends to the vertical members of the frame 1 with the alternate supports 3 arranged parallel to each other and at a slight angle downward from the horizontal with the angle of the intermediate shelves reversed. The lower end of each support is provided with an opening 4 adjacent the vertical side member of the frame 1 of such size to allow a cylindrical container 5 of the packaged beverage to pass therethrough. It is therefore seen that a cylindrical container 5 supported upon the upper shelf 3, unless restrained, will progress by gravity to the lower end of that shelf, through the opening 4 onto the shelf next below, and then through the opening 4 at the opposite end, and so on to the end of the lower shelf. A dispensing closure 6 is provided at the lower end of the lowermost support or shelf 3 which is preferably in the form of a cylinder mounted upon a concentric shaft 7, the outer or cylindrical surface of which is depressed to form a pocket 8 of sufficient size to receive a cylindrical container 5. The rear of the rectangular frame 1 is preferably provided with a co-extensive back plate 9 which rotatably mounts the shaft 7 of the dispensing closure preferably in alignment with the end of the lowermost shelf 3, as shown in Figure 1. A container dispensing chute is provided for receiving a container 5 from the pocket 8 of the dispensing closure and discharge the same through an opening 10 in the front of the casing 2. The chute is preferably formed from a sheet of metal or plate 11, bent at its upper end in a semicircle to embrace the cylindrical dispensing closure 6 and then continue at a tangent thereto on the under side a short distance when it is bent to engage the inner side of a vertical bracket 12 mounted on the bottom of the frame 1. In making this bend, a slight twist is imparted to the plate 11 so that the front edge is lower than the rear edge. The free end of the plate is then bent upwardly to engage the inner side of a vertical bracket 13 mounted upon the bottom of the frame 1. In making this bend the twist is continued and the portion 14 of the plate 11 between brackets 12 and 13 forms a chute to discharge a container 5, received from the pocket 6, longitudinally through the opening 10. If desired, the rear edges of the plate 11 may be attached to a plate 15 supported upon the bracket 13 which will also act as a bearing for the shaft 7, in the event that the back plate 9 is not desired. To prevent the cooling effect of the refrigerating apparatus upon the interior of the casing being dissipated through the opening 10 for the discharge of the containers, this invention contemplates extending the plate 11 of the chute to form an air-tight engagement with the front and rear walls of the casing 1 and to provide a cover plate 11a over the top of the bracket 13 to engage with the rotatable closure 6 and with the under side of the shelf 3, as shown in Figure 1.

In order to insure a temperature within the

casing 2 of the desired low degree it is preferable to provide a refrigerating apparatus of any preferred commercial type supported upon the bottom of frame 1 preferably enclosed by a cover 16. The casing 2 is provided with a door 17 for the insertion of the bottles or cans upon the top shelf 3 which door is also preferably provided with a transparent portion 18 through which the top is visible in order to determine whether or not it should be refilled. It is also preferable to provide the lower portion of the front of the casing 2 with a door 19 through which access may be had to the refrigerating unit contained within the casing 2. The front of the casing 2 also mounts an operating handle 20 which engages the contiguous end of the shaft 7 of the cylindrical dispensing closure whereby operation of the handle will operate the closure. The front of the casing 2 also is provided with a coin slot 21 for the insertion of a coin to free the handle 20 to dispense a container 5. As shown in Figure 2, the coin slot 21 registers with an opening 22 of a coin receiving chute 23 leading to any desired commercial form of coin-controlled apparatus whereby the passage of a coin therethrough will allow one complete rotation to be imparted by the handle 20 to the cylindrical dispensing closure 6. As this coin-controlled mechanism forms no part of this invention, and is so well known, it is not thought necessary to illustrate the same.

While the drawing illustrates the dispensing of a plurality of containers advanced by gravity along a vertical row of shelves, a plurality of such rows may be included in a casing similar to Figure 2 without departing from the scope of this invention. In such a case, the cylindrical dispensing closure is extended to transverse all of the vertical rows and is provided with as many pockets as there are rows arranged in staggered relation about its circumference and the discharge chute 11 likewise extended. In this instance, a different type of commercial coin control mechanism is required so that upon each operation of the handle a pocket containing a cylindrical container will be rotated to discharge the contained retainer upon the chute.

What I claim is:

In a cabinet having a delivery opening for dispensing containers which containers are supported interiorly of a refrigerated storage chamber formed by the cabinet, a cylindrical housing in the storage chamber having a longitudinal slot forming a discharge opening to which the containers are advanced by gravity, said housing having a second longitudinal slot, a delivery chute inclined with respect to the axis of said cylindrical housing for communication between said second longitudinal slot and the delivery opening of said cabinet, and a cylindrical dispensing closure rotatably supported in said cylindrical housing and having a sealed relation therewith, said dispensing closure having a depression extending in the direction of the axis thereof adapted to successively register with the discharge opening of said storage chamber and said delivery chute for transferring containers from said storage chamber to said delivery opening of said cabinet, each of said longitudinal slots being sealed respectively by the wall of said cylindrical dispensing closure when the depression thereof is in registration with the other longitudinal slot.

LAMOND L. TAYLOR.