Dec. 15, 1964 G. C. RANNENBERG 3,161,234

MULTIPASS EVAPORATOR

Filed Oct. 16, 1962

2 Sheets-Sheet 1

FIG. 1

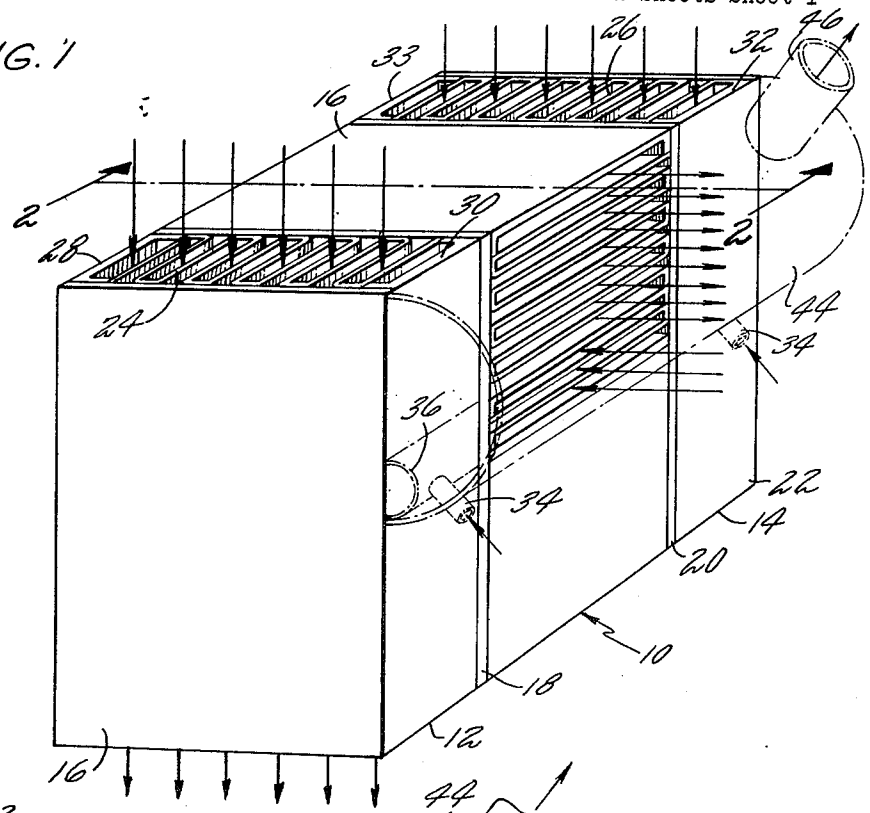

FIG. 2

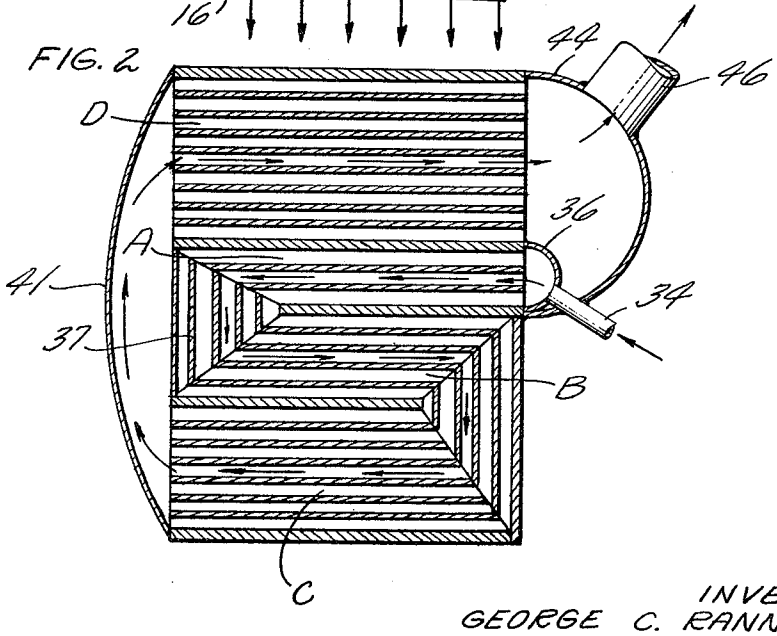

INVENTOR
GEORGE C. RANNENBERG
BY Norman Friedland
AGENT

Dec. 15, 1964 G. C. RANNENBERG 3,161,234

MULTIPASS EVAPORATOR

Filed Oct. 16, 1962 2 Sheets-Sheet 2

FIG. 3

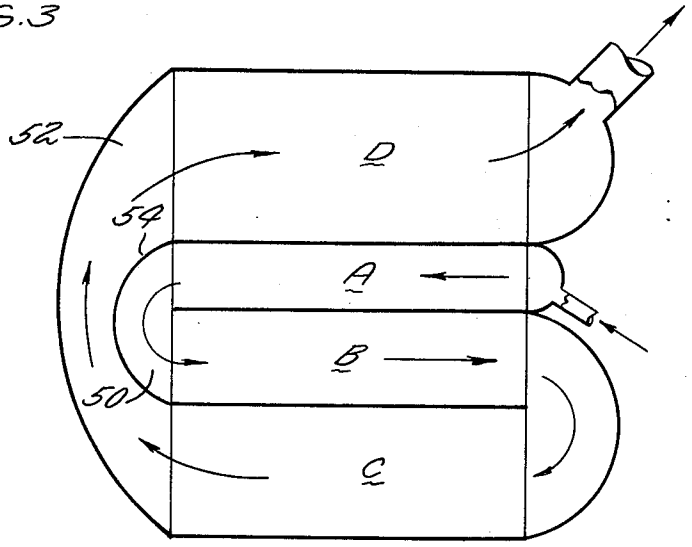

FIG. 4

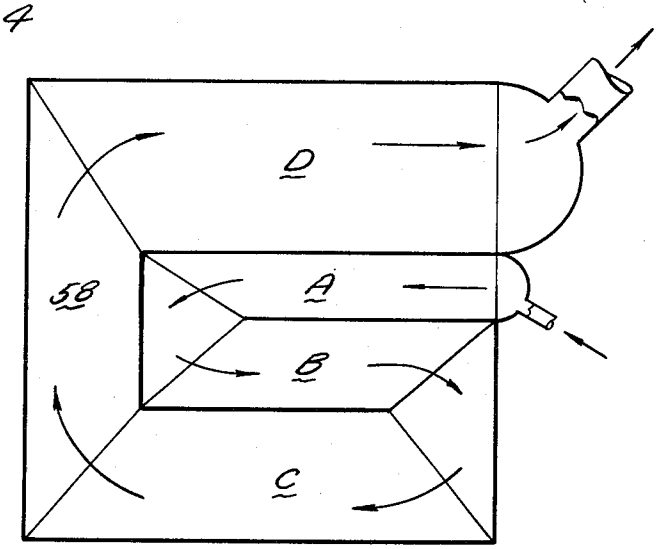

INVENTOR
GEORGE C. RANNENBERG
BY Norman Friedland
AGENT

United States Patent Office 3,161,234 Patented Dec. 15, 1964

3,161,234

MULTIPASS EVAPORATOR

George C. Rannenberg, East Granby, Conn., assignor to United Aircraft Corporation, East Hartford, Conn., a corporation of Delaware

Filed Oct. 16, 1962, Ser. No. 230,878
6 Claims. (Cl. 165—163)

This invention relates to heat exchangers and more particularly to evaporators adapted to be used in a refrigeration system.

As is well known, an evaporator is that part of a refrigeration system where the refrigerant enters the evaporator as a liquid and is vaporized to produce refrigeration. As the air passes through the evaporator, it comes in indirect heat exchange relation with the refrigerant, gives up its heat thereto and is discharged at a much lower temperature than it was when entering the evaporator.

The temperature of the refrigerant decreases as a function of its length of travel in the evaporator until it reaches a particular point intermediate the inlet and outlet of the evaporator. At this point, the liquid refrigerant vaporizes and becomes superheated and hence becomes hotter as it continues its travel. The temperature of the refrigerant increases until it reaches the outlet of the evaporator. Conventional refrigerant evaporators constructed of tubes are often arranged to take advantage of this feature by locating the first refrigerant pass intermediate the refrigerant inlet and refrigerant outlet of the evaporator. In addition, the air to be cooled is first placed in indirect heat exchange relation with the fourth pass (where the temperature of the refrigerant is at its hottest value) and the third pass is placed in indirect heat exchange relation with the air leaving the evaporator. The second pass is sandwiched between the first and third pass. In this manner, maximum temperature differences for heat transfer between the refrigerant and the hot air intended to be cooled are maintained with resultant maximum utilization of the heat exchanger surface area. By the innovation of this invention, I am able to obtain maximum utilization of heat exchanger surface area with a plate-fin configuration as was obtainable heretofore only with tube bundle configurations. The plate-fin evaporator made possible by this invention has the advantage of lower weight and volume than that required by previous conventional plate-fin evaporators.

It is the object of this invention to provide in an evaporator, as described, a novel arrangement of the headers of the evaporator, which include locating external headers one within the other with a common wall separating each, combining external headers with internal headers, and locating the headers internally, so as to obtain maximum temperature difference for heat transfer.

Other features and advantages will be apparent from the specification and claims and from the accompanying drawings which illustrate an embodiment of the invention.

FIG. 1 is an isometric view of a portion of the evaporator showing an arrangement in which internal and external headers are used.

FIG. 2 is a cross-sectional view taken along line 2—2 of FIG. 1, particularly showing the novel location of the refrigerant passes.

FIG. 3 is a schematic illustration showing the novel arrangement of external headers, one inside the other.

FIG. 4 is a schematic illustration wherein all the headers are internal.

Now referring to the drawings, FIG. 1 shows a portion of the core of the evaporator generally illustrated by numeral 10 and a pair of air passes indicated by the numerals 12 and 14 sandwiching the refrigerant core element containing the refrigerant passes indicated by numeral 16. As is noted from the drawing, this section of the core has been exploded to illustrate the inventive concept, but only represents a portion of the entire core. It should be understood that the entire evaporator is built up by alternately stacking similar air and refrigerant core elements to obtain the size necessary to afford optimum refrigeration in any given application.

As will be appreciated by one skilled in the art, the general construction of the evaporator may take any conventional form, however, the plate-fin type of heat exchanger is often preferred for reasons of low weight and volume. As noted in FIG. 1, the partial core comprises end plate 16 and dividing walls 18, 20 and 22 extending longitudinally through the evaporator. Generally parallel fin section 24 is sandwiched between end plate 16 and dividing wall 18 for defining an air pass. The generally parallel fin section 24 may be pierced, serrated, ruffled or straight, depending on such matters as economics and the fluids involved. Closure bars 28 and 30, also extending longitudinally, define passage chambers for receiving the fins so that the fins, together with the end plate, dividing wall and closure bars define a passage for the air intended to be cooled. The air is admitted at the top end of the evaporator and is discharged at the bottom in FIG. 1, although any orientation with gravity may be used. Similarly, another air passage, shown in FIG. 1, is formed from a pair of dividing walls 20 and 22, closure members 32 and 34 and the heat transfer fins 26.

The refrigerant passes, located between a pair of air passes, comprise a similar plate-fin construction, only extending transversely of the air passes. Since the actual construction of the evaporator may take any well-known form, a description thereof, for the sake of convenience, is omitted.

Reference is now made to FIG. 2, which illustrates the novel arrangement of the refrigerant passes. As shown in FIG. 2, the refrigerant is admitted into the evaporator through a plurality of tubes, indicated by numeral 34, which lead into header 36. The header directs the flow through the first pass, indicated by Letter A. In accordance with the present invention, the first pass is located intermediate the top and bottom closure plates of the refrigerant core. As indicated above, the pass comprises a plurality of fins which extend between the dividing plates 18 and 20. Turning passages 37, defined by fins, are mounted at the far end of the inlet and direct the refrigerant to the second pass B and similarly, turning fins B located between the third pass C and the second pass B direct refrigerant to the third pass. Finally, the refrigerant feeds into an external header 41 which conducts the refrigerant in the third pass to the fourth pass D. The refrigerant, which at this point has vaporized and become superheated, is discharged into the outlet header 44 and then directed through the discharge conduit 46 to the next stage (not shown) in the refrigeration system.

It will be noted that each pass may contain a different number of passages, and preferably, the number of passages in each pass are increased as the liquid is vaporized. Thus, the liquid passing through the evaporator remains a liquid until it reaches the end of the third or the beginning of the fourth pass. Thus, by virtue of the novel arrangement of the passes, the hot air entering the evaporator is immediately in indirect heat exchange relation with the superheated refrigerant passing through pass D. As the air becomes cooled, it passes in indirect heat exchange relationship with the liquid refrigerant in passes A and B, and finally the air passes over the lowest temperature refrigerant as it reaches pass C. after which the air is completely refrigerated.

From the foregoing, it will be appreciated that the air intended to be cooled when at its hottest temperature,

comes into indirect heat relation with the refrigerant at its hottest temperature. While, obviously the heat differential between the hot air and the refrigerant at its coolest temperature would be at its greatest value, yet from the standpoint of the overall temperature differential of all the passes, the temperature differential obtained by the arrangement shown by the present invention is higher. Because of this feature, the evaporator has a high heat transfer efficiency and hence achieves minimum heat exchanger or evaporator size for a given application.

FIGS. 3 and 4 are exemplary showings of a refrigerant core element embodying the present invention, but employing different header arrangements. Various factors, such as the shape of the volume available for the evaporator, materials, and brazing capabilities will determine detailed arrangement selected. Again, for the sake of convenience, reference to the construction and the details of the core elements are omitted. It will be appreciated, however, that the mechanical details of construction of the core can be of any well-known, plate-fin form. As in FIGS. 1 and 2, the construction of the core elements shown in FIGS. 3 and 4 are of the plate-fin type. Also, it will be appreciated that the location of the passes are identical to the location of the passes noted in FIG. 2. The letters A, B, C and D represent successive passes in the refrigeration core.

FIG. 3 shows all the headers mounted externally of the core. As noted in the drawing, header **50** is inserted internally of header **52** and wall **54** forms a common wall dividing the two headers. This placing of one header inside the other with flow in opposite directions is a unique and novel way of accomplishing the desired core temperature distribution. Header **56** is connected to the inlet of the evaporator and header **58** is connected to the outlet. The refrigerant core element depicted in FIG. 4 is, in most respects, identical to the core element shown in FIGS. 1 and 2, except that internal header **58** connects the passages in pass C with the passages in pass D.

What has been shown by this invention is a novel arrangement of the passes in the refrigerant core section of an evaporator which, by virtue of this arrangement, provides an effective evaporator while permitting a reduction of the overall evaporator size. It will be appreciated that this advantage is particularly important in aircraft application, since size and the attendant reduction in weight increase the overall performance of the aircraft.

It is to be understood that the invention is not limited to the specific embodiment herein illustrated and described, but may be used in other ways without departing from its spirit as defined by the following claims.

I claim:

1. A multiplate and fin core section of an evaporator comprising a first continuous fin element, a second continuous fin element located adjacent to said first continuous fin element, a third continuous fin element located adjacent to said second continuous fin element, and a fourth continuous fin element located adjacent to said third continuous fin element, spaced plates sandwiching said first, second, third and fourth continuous fin elements for defining parallel channels, closure plate members extending laterally from said spaced plates separating said first, second, third and fourth continuous fin elements from each other for defining four separate passes, means for connecting said parallel channels to each other to form a continuous flow path for a refrigerant, an inlet header mounted on the evaporator and having an opening communicating with one of said fin elements, means for connecting said first, second, third and fourth continuous fin elements so that said refrigerant passes successively through said second, third, fourth and first continuous fin elements, said evaporator also having a fifth continuous fin element disposed adjacent to said first, second, third and fourth continuous fin elements, spaced plates adjacent the edges of said fifth continuous fin element defining therewith open-ended channels extending transversely to said channels formed from first, second, third and fourth fin elements and being adapted to place fluid passing straight through said open-ended channel formed from said fifth continuous fin element in heat exchange relation to the fluid passing through channels formed from said first, second, third and fourth fin elements, so that the fluid entering said open-ended channel of the fifth continuous fin element is in immediate heat exchange relation with the fluid in said first continuous fin element and fluid discharging from said open-ended channel of the fifth continuous fin element is in heat exchange relation with the fluid in said third continuous fin element.

2. A multiplate and fin core section of an evaporator having a top and bottom closure member, a first continuous fin element mounted adjacent to said top closure member, a second continuous fin element mounted adjacent to said first continuous fin element, a third continuous fin element mounted adjacent to said second fin element, and a fourth continuous fin element mounted adjacent to said third continuous fin element, spaced apart parallel members sandwiching the opposite ends of the first, second, third and fourth continuous fin elements and having opposing ends abutting the top and bottom closure members defining therewith open channels, means interconnecting said first, second, third and fourth fin element defining a continuous flow path for said channels, an inlet header and an outlet header mounted on the evaporator and conducting the flow of refrigerant successively through said second, third, fourth and first continuous fin elements, an adjacent pass formed from a continuous fin element sandwiched between flat plates defining laterally extending channels relative to said first, second, third and fourth continuous fin elements for placing fluid in heat exchange relationship so that the fluid at the inlet of the adjacent pass is immediately in indirect heat relation to the fluid in the channels defined by the first continuous fin element.

3. A multichannel, multiplate and fin evaporator comprising at least one continuous fin element, spaced apart parallel extending plate members sandwiching the opposite ends of the fin element for defining therewith a series of separate parallel open ended channels for receiving a fluid intended to be cooled, a series of fin elements mounted adjacent one of said parallel extending plate members, and extending in transverse relation to said one of continuous fin elements for defining four passes for receiving a refrigerant, other spaced apart parallel extending plate members lying transversely to said spaced apart parallel extending plate members, sandwiching the series of fin elements for defining therewith four passes, said four passes being located one next to the other such that the fourth pass is adjacent to the inlet of said channels, the third pass is adjacent the outlet of said channels, the first pass is adjacent said fourth pass and said second pass is intermediate said first pass and said third pass, said passes directing refrigerant successively from the first pass, to the second pass, to the third pass and then the fourth pass.

4. In a refrigerant core section of an evaporator having side wall plates and top and bottom closure members, continuous fin elements extending between said side wall plates for defining a series of open ended channels, means for separating said continuous fin elements for defining a pair of outwardly mounted passes mounted adjacent the bottom and top closure members and inwardly mounted passes mounted between said outwardly mounted passes, an internal header formed at one end of the inwardly mounted fin elements, and another internal header mounted on the opposite end of one of said inwardly mounted fin elements and one of said externally mounted fin elements, an external header communicating with both of said outwardly mounted fin elements, said internal headers and said external headers forming a successive continuous flow path through said channels, an inlet header mounted adjacent to one of said inwardly mounted

passes and an outlet header mounted adjacent to the last pass in said flow path, an adjacent pass formed from a continuous fin element sandwiched between spaced parallelly mounted plates defining a plurality of channels for passing a fluid in heat exchange relationship with the fluid in the adjacent series of channels.

5. In a refrigerant core section of an evaporator having side wall plates and top and bottom closure members, continuous fin elements extending between said side wall plates for defining a series of open-ended channels, means separating said continuous fin elements for defining a pair of outwardly mounted passes mounted adjacent the bottom and top closure members and inwardly mounted passes mounted between said outwardly mounted passes, first and second external headers mounted adjacent to one end of said continuous fin elements, a common wall separating said first external headers, said first external header connecting the pair of inwardly mounted passes and the second external header connecting the outwardly mounted passes, a third external header mounted adjacent to an inwardly mounted and an outwardly mounted continuous fin element and disposed on the opposite end from said first and second external headers, means for leading fluid through said channels and defining a flow path through one of said inwardly mounted passes through one of the external headers through the other inwardly mounted passes, through another externally mounted header, through an outwardly mounted pass, through another externally mounted header and through an outwardly mounted pass, said evaporator having an air core section comprising of at least one continuous fin element, parallel spaced flat walls abutting the opposite edges of said fin element defining therewith a plurality of open-ended channels extending transverse but adjacent to said open-ended channels in the refrigerant core section, the inlet end of said open-ended channel in the air core section disposed adjacent one of said outwardly mounted passes and the outlet end of said open-ended channel in the air core section disposed adjacent the other of said outwardly mounted passes.

6. In a refrigerant core section of an evaporator having side wall plates and top and bottom closure members, continuous fin elements extending between said side wall plates for defining open-ended channels, means separating said continuous fin elements for defining a pair of outwardly mounted passes mounted adjacent the bottom and top closure members and inwardly mounted passes mounted between said outwardly mounted passes, first, second and third internal headers located in the core section, said first internal header mounted at one end of the inwardly mounted passes, said second internal header mounted on the opposite end of the inwardly mounted passes and connecting one of said inwardly mounted passes to an outwardly mounted pass, said third internal header mounted adjacent said first internal header and connecting the outwardly mounted passes with each other, first external header leading to an inlet and connected to an inwardly mounted pass for receiving a refrigerant and a second external header having an outlet for communicating with one of said outwardly mounted passes providing a continuous refrigerant flow path from said first external header, to one of said inwardly mounted passes, to said first internal inlet header, to said other inwardly mounted passes, to said third internal header to one of said outwardly mounted passes, to said second internal header, to the other of said outwardly mounted passes and to said second external header, said evaporator having an air core section comprising of at least one continuous fin element parallel spaced flat walls abutting the opposite edges of said fin element defining therewith a plurality of open-ended channels extending transverse but adjacent to said open-ended channels in the refrigerant core section, the inlet end of said open-ended channel in the air core section disposed adjacent one of said outwardly mounted passes and the outlet end of said open-ended channel in the air core section disposed adjacent the other of said outwardly mounted passes.

References Cited by the Examiner

UNITED STATES PATENTS

1,139,549	5/15	Lovekin	165—163
2,875,986	3/59	Holm	165—165
3,043,110	7/62	Ahern	165—145

CHARLES SUKALO, *Primary Examiner.*

FREDERICK L. MATTESON, JR., *Examiner.*