Feb. 1, 1944. R. C. SANFORD 2,340,617

PHASE INVERTER CIRCUIT

Filed June 28, 1941

FIG. 1.

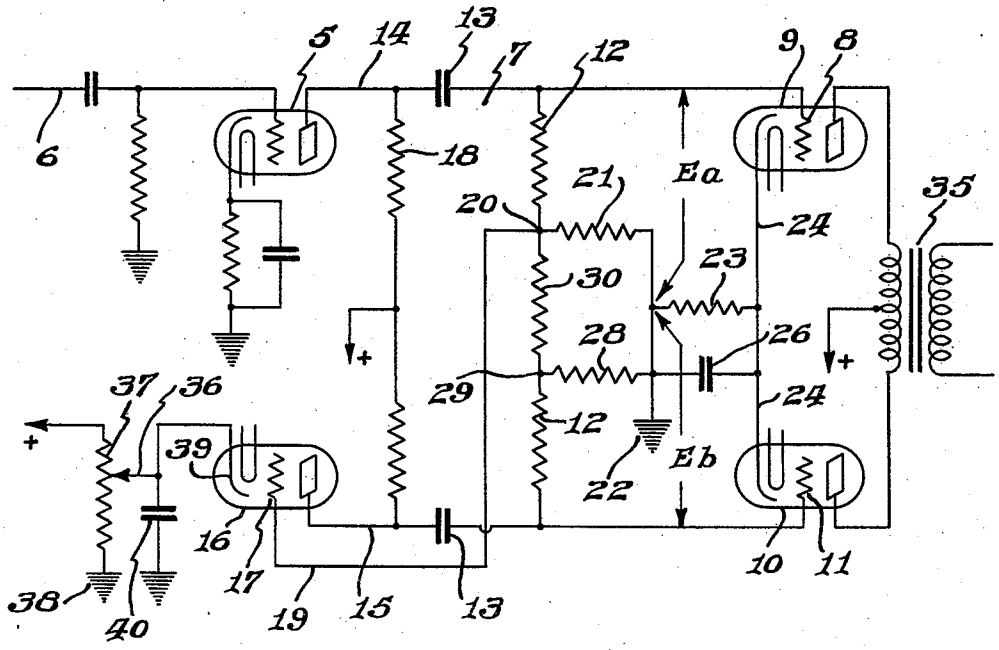

FIG. 2.

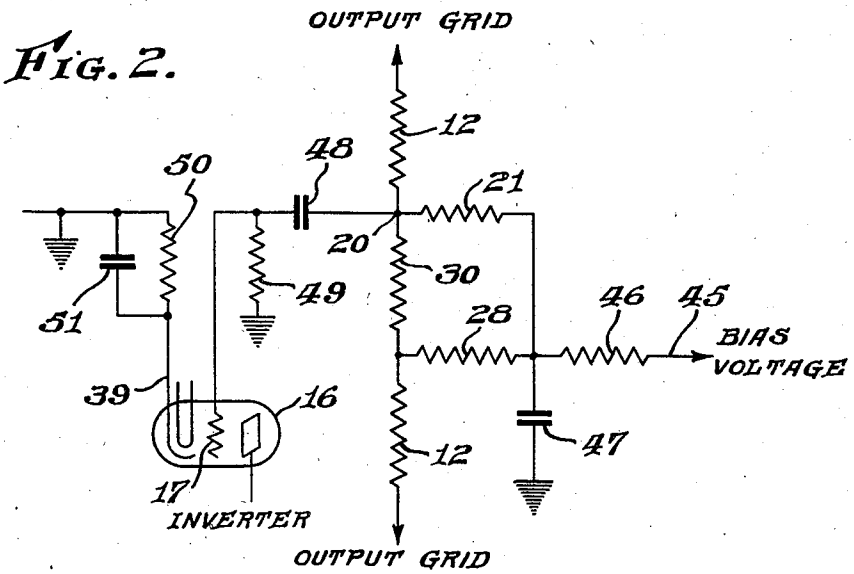

Inventor

Robert C. Sanford

By J. J. Huff

Attorney

Patented Feb. 1, 1944 2,340,617

UNITED STATES PATENT OFFICE

2,340,617

PHASE-INVERTER CIRCUIT

Robert C. Sanford, Camden, N. J., assignor to Radio Corporation of America, a corporation of Delaware

Application June 28, 1941, Serial No. 400,268

6 Claims. (Cl. 179—171)

This invention relates to phase-inverter circuits for coupling a single-ended amplifier with a push-pull or balanced amplifier.

In the usual two-tube phase-inverter circuit, a portion of the output signal voltage of a single-ended amplifier tube is applied to the grid of a second or inverter tube in such a manner that the two signal voltages between ground or chassis and the anodes of the two tubes are equal in magnitude and 180° out of phase. The proper phase relation between these two signal voltages is obtained by the 180° phase shift in the inverter tube, and the ratio of these voltages, Ea/Eb, as a measure of the amplitude balance of the phase inverter circuit, is made equal to unity by adjusting the portion of the voltage that is applied to the grid of the inverter tube. In the usual circuit, this voltage is derived from a tap on the anode coupling resistor of the preceding voltage amplifier tube, through a coupling capacitor.

Variations betwen tubes of the same type used in the inverter stage and variations in the value of the anode coupling resistors constituting the voltage divider network from which the phase inverter voltage is derived, have been found to produce corresponding variations in the ratio Ea/Eb and, accordingly, a self-balancing phase-inverter circuit has in some cases found a preference in use. This circuit provides degenerative feedback by a common resistor without by-pass in the anode circuit of the single-ended or driver stage and in the anode and grid circuits of the inverter stage.

The magnitude of the signal voltage across the common coupling resistor, which is applied to the grid of the inverter tube, depends upon the difference between the values of the output signal currents of both the single-ended or driver stage and the inverter stage. Hence, the effects of variation in the value of the common coupling resistor or the effects of possible variations between different tubes of the same type used in the inverter stage is relatively small.

Because of the degeneration resulting from a portion of the output of the inverter being fed back to the input of the inverter, the stability characteristic of degenerative amplifiers is obtained without appreciable loss of overall gain through the amplifier, including the balanced or push-pull output stage. The balance in the voltages applied to the output stage is within limits which are acceptable, the ration Ea/Eb being approximately 1.1 in most cases. As the gain of the inverter stage is increased, however, the ratio more nearly approaches unity.

The present invention relates more particularly to the self-balancing type of phase inverter circuit, and has for its primary object to provide an improved circuit of that type which is self-regulating and self-balancing while, at the same time, permitting the ratio Ea/Eb to more nearly approach unity and to maintain that ratio with variations in coupling impedance values and in variations between various tubes of the same type in the inverter stage.

It is also an object of this invention, to provide an improved self-balancing phase inverter circuit including a resistor network in place of the usual common coupling resistor, whereby a relatively small portion of the output signal at the driver or single-ended amplifier stage is made to appear at the inverter grid to cancel the voltage applied thereto, and whereby the unbalance in the amplifier may be substantially zero.

The invention will be understood further from the following description, when considered in connection with the accompanying drawing, and its scope is pointed out in the appended claims.

In the drawing,

Figure 1 is a schematic circuit diagram of a self-balancing phase-inverter network embodying the invention, and

Figure 2 is a similar schematic circuit diagram showing a portion of the circuit of Fig. 1, modified in accordance with the invention.

Referring to Fig. 1, 5 is a driver or input amplifier stage for the inverter network connected with a single-ended input circuit 6 for audio frequency signals, for example, and coupled through a suitable impedance coupling network 7 to the input grid 8 of one of a pair of balanced amplifier tubes 9 and 10 comprising the output or power amplifier stage. The input grid of the amplifier 10 is indicated at 11. Both grids are provided with suitable resistors 12 and input coupling capacitors 13 in connection with the anode circuits 14 and 15 of the driver 5 and inverter stage 16, respectively.

In the usual inverter circuit, the input grid 17 of the inverter stage 16 is coupled through a voltage divider network including a resistor 18, to the anode circuit 14 of the driver stage or the grid circuit of the output stage, selected so that the gain from the coupling resistor 18 to grid 11 is unity. With known circuits of the self-balancing type, a permanent slight unbalance is produced.

In the present case, the inverter grid is con-

nected through a lead 19 to a terminal 20 which is connected to the low potential ends of both grid resistors 12—12 and to a common ground through a resistor 21 connected between the terminal 20 and the chassis or ground return 22 for both the grid and anode circuits of the amplifier. Bias potential is applied to the grids 8 and 11 from a suitable self-bias resistor 23 connected between ground and cathode leads 24 of amplifiers 9 and 10. This resistor is provided with a suitable audio frequency bypass capacitor 26. The value of the resistor 21 may be substantially twice the normal value for a self-balancing phase-inverter amplifier system, since it is substantially in parallel with a similar resistor 28 connected between a terminal 29 and ground 22, through a series coupling or degeneration controlling resistor 30 connected between the terminals 20 and 29. If the voltage E*a* equals the voltage E*b* there will be no feedback and zero potential will correspond to the mid-tap on the resistor 30 provided by the two resistors 21 and 28 at the ground connection. If an unbalance exists, it will be reduced by the resulting regeneration or degeneration which occurs.

The present resistor network provides a connection to ground or chassis for the grid 8 of the output tube 9 through the coupling resistor 12 and the resistor 21, while a similar connection to ground is provided for the grid 11 of the output tube 10 through its corresponding grid resistor and the resistor 28. Thus, the two resistors 21 and 28 may preferably be of the same order, for example, 250,000 ohms, and likewise the resistors 12 may be of substantially the same value.

The decoupling or feedback control resistor 30 may be of a suitable value for controlling the feedback and, in the present example, may be considered to be of the order of 250,000 ohms.

The grid of the phase inverter tube 16 is supplied with signal voltage through the resistor network 12—21—30—28—12. It is desirable to design the circuit so that E*a* as nearly as possible is equal to E*b* and 180° out of phase. In order to do this the voltage on the grid 17 must be g times smaller than E*a* where g is the gain of the inverter stage.

The self-balancing phase-inverter network comprises the resistor 28 together with the resistors 30 and 21. Since the signal voltage from the inverter stage 16 is developed across the network comprising the resistor 28 in parallel with the resistors 30 and 21 in series, as its load resistance, the voltage fed back by the network to the inverter grid 17 is less than the voltage across the resistor 28 by an amount determined by the ratio of the sum of the resistances at 30 and 21 with respect to the resistance at 21.

Accordingly, there is less cancellation of the voltage on the inverter grid than normal to inverter circuits of the self-balancing type, and, for any given value of gain of the inverter, the resistances 21, 28 and 30 may assume values such that the voltages at the output grids 8 and 11 are substantially equal and 180° out of phase under all conditions of operation.

The resistor network 21, 28 and 30 is connected between ground or chassis and the terminal 20, which is common to the anode circuit of the driver tube 5 and to the anode and grid circuits of the inverter tube 16. Because of this common connection, the magnitude of the signal voltage across this network which is applied to the grid of tube 16 depends on the difference between the values of the output signal currents of the tubes 5 and 16. Hence, the effective variations in the value of the resistance in the network or possible variations between different tubes of the same type, as 16, is very small.

The degeneration of the circuit, because a portion of the output of the tube 16 is fed back to the input thereof, tends to produce a stability which is highly desirable in an amplifier of this type, while control of the potential applied to the grid of tube 16 and the magnitude of the feedback is determined by the value of the resistor 30 which, in effect, tends to decouple the terminal 29 from the terminal 20 and the anode circuit of the inverter tube from the grid circuit thereof to a predetermined degree.

The radio E*a*/E*b* for the grid voltages applied to the output tubes 9 and 10 is made substantially equal to unity with this self-balancing circuit, by adjustment of the network resistances at 21, 28 and 30.

The amplifier may be provided with any suitable output coupling device, such as a balanced output transformer 35, and the bias potential applied to the control grid 17 of the inverter stage may be derived from any suitable source. In the present example, the bias potential on the grid 17 is controlled by an adjustable tap connection 36 on a voltage supply resistor 37 having a negative terminal connected to chassis or ground, as indicated at 38, with the control means 36 connected to the cathode 39. A bypass capacitor 40 is provided for the cathode connection. In this manner, the grid 17 is placed at a suitable negative potential with respect to the cathode by adjustment of the connection 36.

In other coupling systems, a fixed bias potential source may be provided for the output tubes, which differs from that provided for the inverter and driver stages. The circuit of Fig. 1 may therefore be modified as shown in Fig. 2. In this circuit, bias potential is applied through the resistors 21 and 28 to the output amplifier grid resistors 12 from a suitable supply lead 45 in which is connected a filter resistor 46, having a filter capacitor 47 connected to chassis or ground at the output end thereof, and the control grid 17 of the inverter stage 16 is coupled to the terminal 20 through a blocking or coupling capacitor 48. Bias potential is applied to the grid 17 through a grid resistor 49 connected to ground, from a self-bias resistor 50 in circuit with the cathode 39. A bypass capacitor 51 is provided for the resistor 50, as in the preceding circuit arrangement.

In this modification of the circuit, the cathode of the inverter stage is returned to a voltage source such as the self-bias resistor 50, whereby the net voltage difference between the grid and the cathode of the inverter is correct for the condition of operation desired. In this case both the output grids and the inverter grid may be operated independently of each other at the proper potentials for most efficient and distortionless amplification.

I claim as my invention:

1. In a phase-inverter amplifier of the self-balancing type, the combination of a pair of balanced output amplifier tubes each having an input grid circuit and a grid resistor connected in said circuit, a feedback coupling resistor connected between said grid resistors, means providing a high resistance connection to ground for each of said grid resistors, and means providing a phase inverter grid connection with the ground end of one of said grid resistors.

2. A self-balancing phase-inverter system comprising a driver amplifier stage, an output amplifier stage including an amplifier tube impedance-coupled to the said driver stage, an inverter amplifier stage including an amplifier tube having a cathode, a control grid and an anode, a second output amplifier tube in said output stage impedance-coupled to said inverter stage, a grid resistor for each of said output amplifier tubes, means for coupling the output of said last named amplifier tubes in balanced relation to each other, a coupling resistor connected between each of said grid resistors and ground, a feedback control resistor connected between the grid ends of said last coupling resistors, and means providing a coupling connection between one end of said feedback resistor and the control grid of said inverter stage amplifier tube.

3. In a phase-inverter amplifier of the self-balancing type, the combination of a driver amplifier stage, a balanced output amplifier stage, an inverter stage having a signal input grid and an output anode, means providing a resistance coupling network between said driver stage and one side of the balanced output stage and between the inverter stage and the other side of the balanced output stage including an anode coupling connection for the inverter stage, means providing a connection for the inverter stage grid with said network to provide substantially unity gain between the driver stage output and the input of said other side of the balanced output stage, and means providing a resistive connection in said network for decoupling the anode and grid of said inverter stage to a predetermined degree thereby to establish and maintain a predetermined condition of balance in said amplifier.

4. A phase-inverter amplifier of the self-balancing type comprising in combination a pair of amplifier tubes having a balanced input circuit, means providing a resistance path across each half of said input circuit, a driver stage coupled to one-half of said input circuit, an inverter stage having a signal input grid and an output anode coupled to the other half of said input circuit, a feedback control resistor connected between predetermined spaced terminals on said resistance paths, and a grid connection for said inverter stage with one of said terminals.

5. In a phase-inverter amplifier, the combination of an audio frequency amplifier tube, an output amplifier tube coupled to said first-named tube, a phase-inverter tube, a second output amplier tube coupled to said phase-inverter tube in pushpull relation to the first-named output tube, a resistor network comprising two relatively high resistance paths one across each half of the pushpull connection, means for deriving grid voltage for the inverter tube from a connection point on one of said high resistance paths, and a feedback connection comprising a resistance element for controlling the degree of degeneration of the inverter stage interposed between said point and a connection point on the other of said high resistance paths.

6. In a phase-inverter amplifier, a self-balancing coupling network comprising input grid connections for a balanced amplifier, a bias potential supply connection for said amplifier, impedance coupling means providing a conducting path between said last-named connection and said input grid connections in balanced relation, an impedance element providing a bridging connection between two points on said paths, an inverter amplifier stage coupled to said first-named network to apply signals thereto, and means providing a control grid connection for said inverter stage with said network to derive a signal voltage for said stage through said impedance element.

ROBERT C. SANFORD.