March 21, 1961 G. J. McGRAW 2,975,496

CLOSURE DEVICE

Filed May 14, 1959 4 Sheets-Sheet 1

Fig. 1.

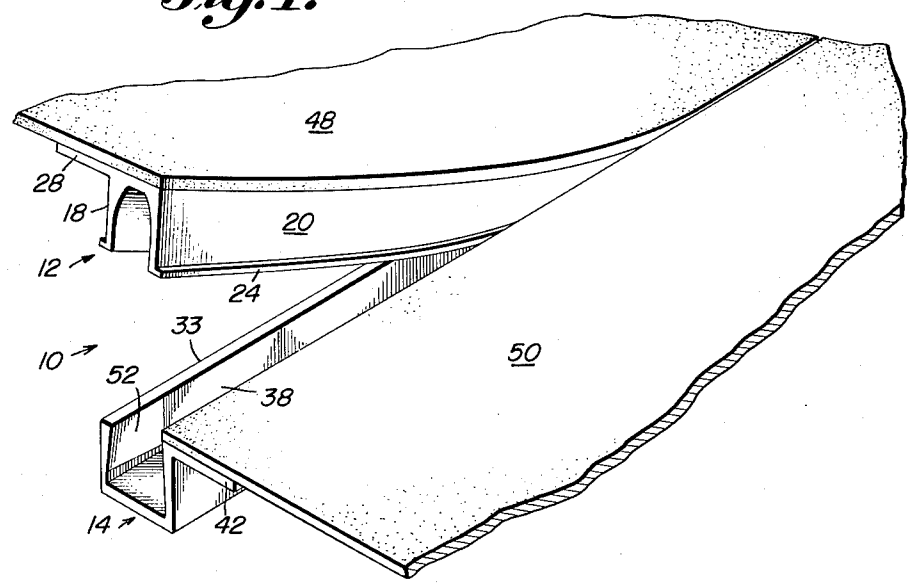

Fig. 2.

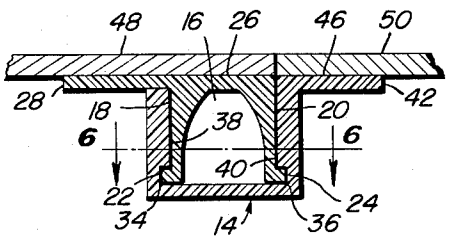

Fig. 3.

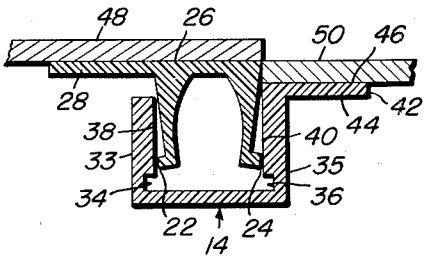

Fig. 4

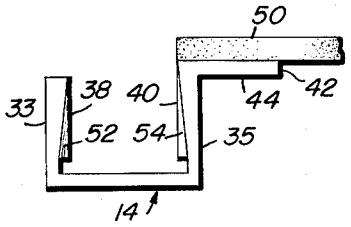

Fig. 5.

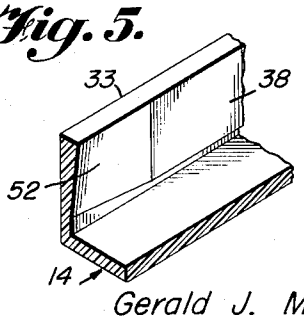

INVENTOR

Gerald J. McGraw

BY Robert C. Sullivan

ATTORNEY

March 21, 1961 G. J. McGRAW 2,975,496

CLOSURE DEVICE

Filed May 14, 1959 4 Sheets-Sheet 2

Fig. 7.

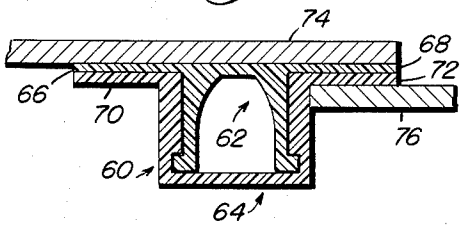

Fig. 8.

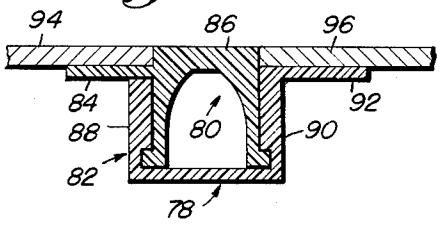

Fig. 6.

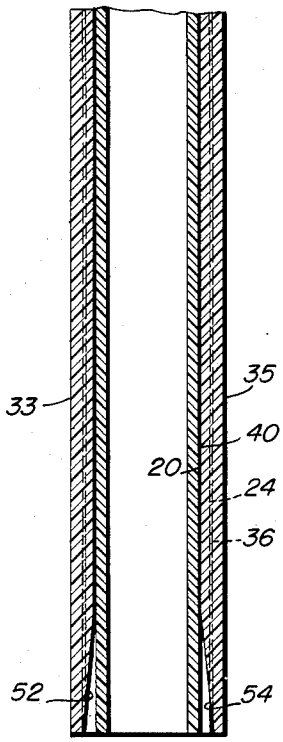

Fig. 9.

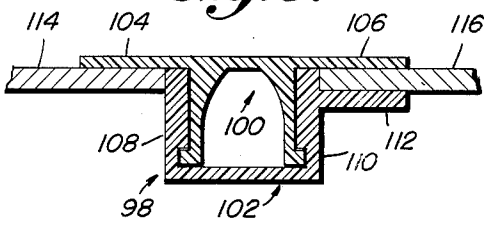

Fig. 10.

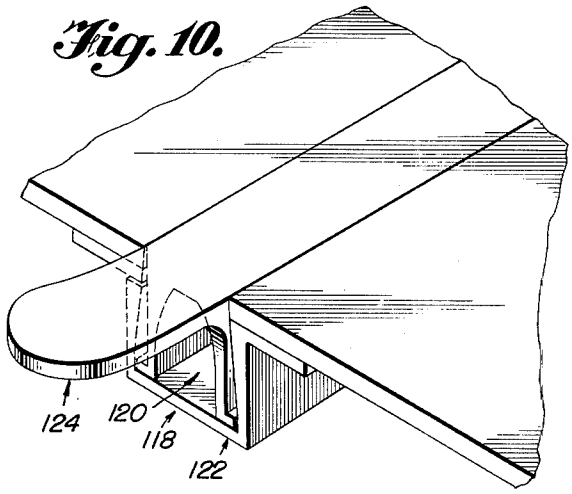

INVENTOR

Gerald J. McGraw

BY Robert C. Sullivan

ATTORNEY

March 21, 1961 G. J. McGRAW 2,975,496

CLOSURE DEVICE

Filed May 14, 1959 4 Sheets-Sheet 3

Fig. 11.

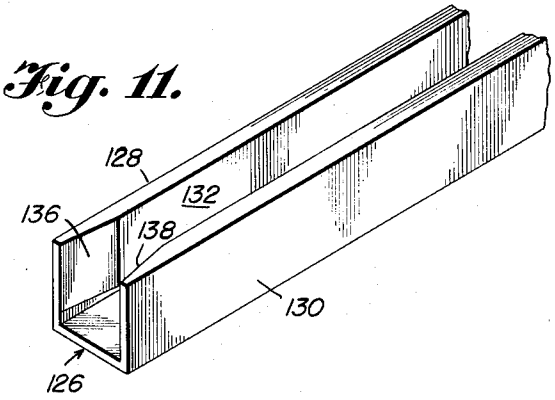

Fig. 12.

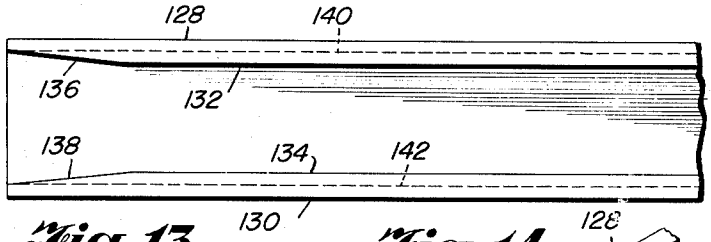

Fig. 13.

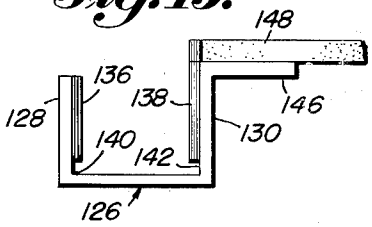

Fig. 14.

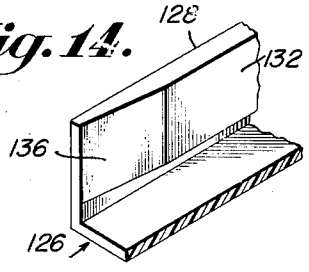

Fig. 15.

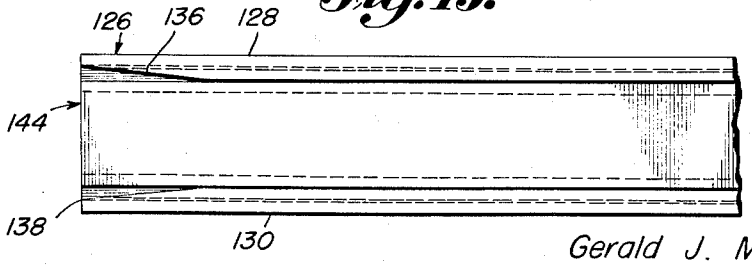

INVENTOR

Gerald J. McGraw

BY Robert C. Sullivan

ATTORNEY

March 21, 1961 G. J. McGRAW 2,975,496

CLOSURE DEVICE

Filed May 14, 1959 4 Sheets-Sheet 4

Fig. 16.

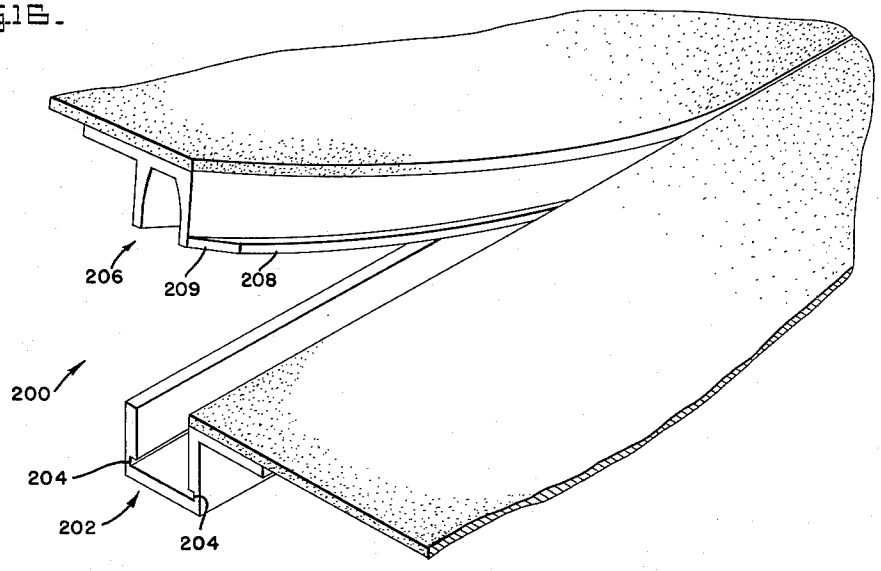

Fig. 17.

Fig. 19.

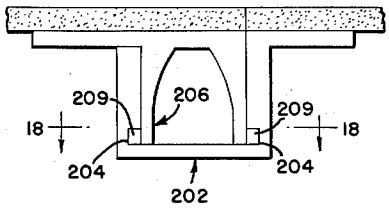

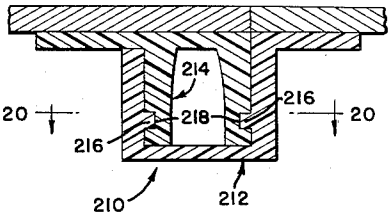

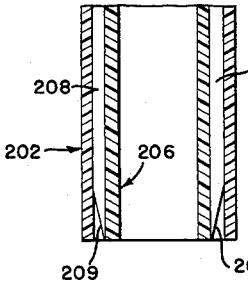

Fig. 18.

Fig. 20.

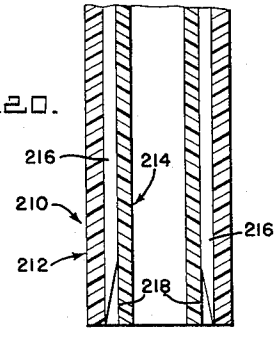

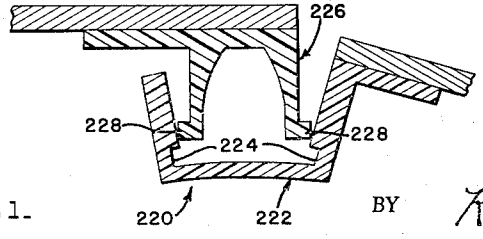

Fig. 21.

INVENTOR
GERALD J. McGRAW

BY Robert C. Sullivan

ATTORNEY

United States Patent Office 2,975,496 Patented Mar. 21, 1961

2,975,496

CLOSURE DEVICE

Gerald J. McGraw, 4117 Patterson Ave., Richmond, Va., assignor to W. J. McGraw, Richmond, Va.

Filed May 14, 1959, Ser. No. 813,172

17 Claims. (Cl. 24—201)

This invention relates to closure devices for use on garments, storage containers, and the like, and for other objects where closing or sealing is necessary. This application is a continuation-in-part of my application Serial No. 651,202, filed April 8, 1957, now abandoned.

It is an object of this invention to provide a closure device which cannot jam or bind, which is simple and foolproof in its operation, and which remains securely closed until intentionally opened.

It is another object of this invention to provide an economical closure device suitable for use with a wide variety of applications such as men's and women's garments, shoes, storage containers, gas and liquid containers, traveling bags, and cardboard cartons, and for many other objects where closing or sealing is necessary.

It is a further object of this invention to provide a closure adapted to provide a gas-tight or water-tight closure of an opening when used with suitable materials.

In achievement of these objectives, there is provided in accordance with this invention a closure device including an outer or female closure strip which is attached to one of the edges being closed along the entire length thereof and an inner or male closure strip which is attached to the other edge of the material being closed along the entire length thereof. One of the closure strips is provided along the length thereof with undercut portions or grooves which define a first interlocking means, while the other closure strip is provided along its length with projections or tongues which engage the undercut portions or grooves of the first interlocking means and define a second interlocking means. An important feature of the construction is the progressive lateral cutting away of one of the interlocking means, either the undercut groove-like interlocking means or the tongue-like projection interlocking means in an end region of the interlocked strips, so that the area of interlocking between the first and second interlocking means of the respective strip members is progressively laterally reduced in approaching the end of the strip members. At least one of the strip members is made of flexible material so that once the separation of the interlocking means of the respective strip members has been begun in the end region due to the cut-away construction, the strip members may then be progressively released from each other along their entire length due to the flexing action of the flexible strip member which permits separation of the interlocked tongue-and-groove-like portions beyond the end region. The special end construction of the strip members also facilitates the engagement of the ends of the closure strips since the closure strip members may be first engaged with each other in the end region where the area of interlocking is progressively cut away, with the remaining portions of the length of the closure members then being easily pressed into engagement with each other.

Further objects and advantages of the invention will become apparent from the following description taken in conjunction with the accompanying drawings in which:

Fig. 1 is a perspective view of a closure in accordance with the invention, in partially opened position;

Fig. 2 is a view in transverse section of the closure in closed position;

Fig. 3 is a view similar to Fig. 2 but with the inner closure member moved to a position in which the locking tongues of the inner member are released from locking engagement with the cooperating grooves of the outer closure member;

Fig. 4 is an end view of the outer closure member;

Fig. 5 is a perspective view showing details of the wedge-shaped end of the outer closure member;

Fig. 6 is a view in longitudinal section along line 6—6 of Fig. 2;

Fig. 7 is a view in transverse section of a slightly modified form of closure;

Fig. 8 is a view in transverse section of another modified form of closure;

Fig. 9 is a view in transverse section of still another modified form of closure;

Fig. 10 is a perspective view illustrating a modified form of closure device having a tab at one end thereof to assist in releasing the closure from locked position;

Fig. 11 is a perspective view, partially broken away, showing an outer or female closure member having a modified end construction;

Fig. 12 is a top plan view of the modified closure member of Fig. 11;

Fig. 13 is an end view of the modified closure of Fig. 11;

Fig. 14 is an enlarged perspective view, partially broken away, showing the wedge end of the modified closure member of Fig. 11;

Fig. 15 is a top plan view showing the modified female closure member of Fig. 11 in engagement with an inner or male closure member;

Fig. 16 is a perspective view of a modified closure in accordance with the invention in which the tongue-like projections carried by the male or inner closure member are progressively cut away in the end region;

Fig. 17 is an end view of the embodiment of Fig. 16;

Fig. 18 is a view in longitudinal section along line 18—18 of Fig. 17;

Fig. 19 is a view in transverse cross section of still another modified embodiment of the invention in which the tongue-like projections are carried on the inner surface of the walls of the female or outer closure strip while the mating undercut portions or grooves are carried on the walls of the male closure strip;

Fig. 20 is a view in longitudinal section along line 20—20 of Fig. 19; and

Fig. 21 is a view in transverse cross section of still another modified embodiment of the invention in which the outer closure strip is made of flexible material.

Referring now to the drawings, and more particularly to the embodiment shown in Figs. 1–6, inclusive, the closure device is generally indicated at 10 and includes an inner or male closure member generally indicated at 12 and an outer or female closure member generally indicated at 14. The inner member 12 is made of a material which is moderately flexible, such as a suitable plastic material, semi-hard rubber, a flexible metal, or a paper or cellulosic product. The outer closure member 14 may be made of the same material as member 12 if desired but also may be made of a material considerably less flexible than the material of inner member 12. If desired, the material of outer closure member 14 may be substantially rigid. Insofar as the operability of the closure device is concerned, it is only necessary that one of the closure members 12 or 14 be made of a flexible material.

Inner closure member 12 is an elongated strip integrally molded or otherwise formed in one piece and having a hollow arch-shaped interior 16 and outer walls 18 and 20 which are vertical with respect to the views shown in the drawings. Walls 18 and 20 of member 12 are straight for the greater part of their length and terminate at their lower ends in an interlocking means in the form of lip or tongue portions 22 and 24 which project laterally outwardly for a uniform width in opposite directions from the lower edges of walls 18 and 20 along the entire length of these walls. In the embodiment shown in Figs. 1–6, straight side wall 20 of inner closure strip 12 extends to the top surface 26 of inner closure strip 12 while straight side wall 18 terminates at the lower surface of a flange portion 28 whose upper surface is a continuation of the top surface 26 of strip 12.

Outer or female closure strip 14 is of generally U-shape or channel-shape in transverse cross section and is open at its upper end, with respect to the views shown in the drawings, to receive inner closure strip 12. Outer closure strip 14 includes straight walls 33 and 35 having inside surfaces 38 and 40 which are spaced apart for a distance just slightly greater than the distance between outside walls 18 and 20 of inner strip member 12 in its unflexed condition, as shown in Fig. 2. Outer strip 14 is provided on its inner surface and adjacent its bottom edge with interlocking means in the form of oppositely disposed longitudinally extending grooves 34 and 36 adapted to receive the tongues or lips 22 and 24 of male closure strip 12. Grooves 34 and 36 extend for a uniform width for substantially the entire length of outer closure strip 14, except at the wedge end or ends thereof where the walls 38 and 40 are laterally cut away above the grooves 34 and 36 so that grooves 34 and 36 taper to zero width. The distance between the facing surfaces of the oppositely disposed grooves 34 and 36 of outer closure strip 14 is just slightly greater than the distance between the outer edges of the oppositely disposed tongue portions 22 and 24 of inner closure strip 12.

At the end of strip 14, inner surfaces 38 and 40 of walls 33 and 35 of the strip taper laterally outwardly in progressing toward the end of the closure member and are also tapered laterally outwardly in approaching the bottom edge of the closure member, as indicated at 52 and 54 and best seen in the views of Figs. 4 and 6. In a modified embodiment shown in Figs. 11–15, and to be described hereinafter, the inner walls of the female closure strip are tapered laterally only in axially approaching the end of the strip and are not tapered from top to bottom as in the embodiment of Figs. 1–6.

Due to the lateral cutting away or tapering of walls 38 and 40 above the grooves 34 and 36, the area of interlocking between the tongue-like projections 24 of inner strip member 12 and the undercut portions or grooves 38 and 40 of outer strip member 14 is progressively reduced in the end region, reaching a minimum area of interlocking at the extreme end of the closure strips.

In the embodiment shown in Figs. 1–6, wall 33 of female closure strip 14 terminates at a height just slightly below the lower surface of flange portion 28 of inner closure strip 12 when the parts are assembled. The outer surface of wall 35 terminates at the inner or under surface 44 of a flange portion 42 integral with outer strip 14 and extending laterally from the upper end of wall 35. The upper surface 46 of flange portion 42 of outer strip member 14 is flush with the upper surface 26 of inner strip member 12. The two opposite edges 48 and 50 of the material being joined at the closure are attached by gluing, riveting or by any other suitable means to the upper surfaces 26 and 46 of inner and outer closure strips 12 and 14, respectively. In the embodiment of Fig. 2, the closure member is completely concealed by the edges 48 and 50 of the material being joined, edges 48 and 50 lying in a common plane due to the fact that the flanges 28 and 42 which support the respective edges of the material lie in a common plane.

If it is desired that the closure device be openable from either of its ends, both ends of the outer strip member may be provided with wedge-shaped end wall portions such as those previously described. However, if it is desired that the closure be openable only from one end, then the wedge-shaped end wall portions are provided on the female or outer closure strip only at the end which is to be opened, and the opposite ends of the two closure strips may be anchored to each other by any suitable means, such as a pin member extending transversely across the two interengaged strip members.

There is shown in Fig. 7 a closure member generally indicated at 60, and including an inner strip member 62 and an outer strip member 64 which are respectively similar to the closure strips 12 and 14 previously described, and differ only in the manner in which they are adapted to be attached to the two edges of the device which is being closed. Thus, inner strip member 62 of the embodiment of Fig. 7 includes a pair of oppositely disposed flange portions 66 and 68 lying in a common plane with each other and with the upper end of inner strip 62. Outer strip member 64 includes a pair of oppositely disposed flange portions 70 and 72 which respectively lie below but in contact with flange portions 66 and 68 of inner strip member 62. One of the edges 74 of the material to be joined is fastened by any suitable means to the upper surface of the inner strip 62 and extends to the outer edge of flange 68. The opposite edge 76 of the material to be joined is fastened to the underneath surface of flange 72 of outer strip member 64. In the embodiment of Fig. 7, therefore, the opposite edges 74 and 76 of the material being joined at the closure lie in overlapped relation to each other.

The modified closure generally indicated at 78 in Fig. 8 includes an inner strip member generally indicated at 80 and an outer strip member generally indicated at 82. Strip members 80 and 82 are respectively similar to strip members 12 and 14 of Figs. 1–6 and differ only in the manner in which they are adapted to be joined to the material at the edges being closed. Inner strip member 80 includes at one side thereof an integral flange portion 84 which lies below the upper or top surface 86 of inner strip member 80. Flange portion 84 lies slightly above and extends laterally beyond the upper edge of side wall 88 of outer strip member 82. A flange 92 extends laterally from the upper end of the opposite side wall 90 of outer strip member 82, flange 92 lying in a common plane with flange 84 of inner strip member 80. The two edges 94 and 96 of the material to be joined at the closure are respectively secured to flanges 84 and 92 of inner and outer strips 80 and 82. The upper surfaces of edges 94 and 96 lie in a common plane with each other and with the upper end 86 of inner strip 80. In the embodiment of Fig. 8, the upper end 86 of inner closure strip 80 is visible and edges 94 and 96 of the material being joined extend on either side of end 86 of strip 80.

The modified closure generally indicated at 98 in Fig. 9 includes an inner closure strip generally indicated at 100 and an outer closure strip generally indicated at 102 which are generally similar to closure strips 12 and 14 of Figs. 1–6 and differ only in the manner in which they are adapted to be attached to the edges of the material being joined.

Inner closure strip 100 includes a pair of flange portions 104 and 106 whose upper surfaces lie in a common plane with and form a continuation of the upper end of inner strip 100. Outer strip 102 includes a pair of vertical side walls 108 and 110 whose upper ends lie beneath and in abutting relation to flanges 104 and 106 of inner strip 100 when the two strips are in closed position. An integral flange portion 112 extends laterally from wall 110 of outer strip 102 adjacent but below the upper end of wall 110. One edge 114 of the material to be joined at the closure is attached to the underneath surface of flange 104 of in-

ner strip 100 while the other edge 116 of the material to be joined is fastened to the upper surface of flange 112 of outer strip member 102. In the embodiment of Fig. 9, the upper surface of inner strip 100 and the attached flanges 104 and 106 are visible when the article having the closure is in use.

The modified closure device generally indicated at 118 in Fig. 10 includes an inner closure strip 120 and an outer closure strip 122 which are respectively similar to closure strips 12 and 14 of Figs. 1–6. In accordance with the modified construction, an integral tab member 124 extends from the outer end of inner closure strip 120. Tab member 124 may be gripped by the user as an aid in raising the end of inner strip 120 along the surfaces of the wedge-shaped end of outer closure strip 122 when the closure device is being used. Tab member 124 may be used with any of the embodiments of the invention described in this specification.

There is shown in Figs. 11–15, inclusive, a modified embodiment in which the walls at the wedge-shaped end of the female closure strip taper only in progressing longitudinally or axially of the strip, and do not taper from top to bottom of the strip as in the embodiment of Figs. 1–6. The female closure strip having the modified end construction is generally indicated at 126 and includes a pair of oppositely disposed walls 128 and 130 whose respective inside surfaces 132 and 134 extend parallel to each other for most of their length, but which diverge from each other or taper outwardly adjacent an end or ends thereof as indicated at wall portions 136 and 138, respectively. Wall portions 136 and 138 taper in thickness only in progressing longitudinally toward the end of the female closure strip and do not taper from top to bottom of the strip as in the embodiment of Figs. 1–6.

The inside surfaces 132 and 134 of walls 128 and 130 are provided with grooves 140 and 142 adapted to receive the lips or tongues of a male closure member generally indicated at 144 in Fig. 15, which is similar to the male closure members previously described. Grooves 140 and 142 taper to zero width at the outer end of tapered wall portions 136 and 138. The end view of Fig. 13 shows the female closure member 144 provided at the upper end of one of its side walls with a flange 146 which receives an edge 148 of the material being joined at the closure.

Operation of embodiment of Figs. 1–15, incl.

The operation of the closure device will be described with reference to the embodiment of Figs. 1–6. However, it will be understood that the operation of all of the embodiments of Figs. 1–15, inclusive, is the same.

A preferred method of engaging the two closure strips is to first engage the ends of the closure strips adjacent the wedge or cut-away end of outer closure member 14. Once the closure strip members have become engaged at the cut-away end of the outer closure member 14, the remaining portions of the length of the closure members are easily pressed into engagement.

In order to disengage the two closure strips from each other, inner strip 12 is grasped at the end thereof disposed at the wedge end of the outer strip 14 and is raised upwardly toward the closed end of the closure. Tongues 22 and 24 of inner strip 12 slide upwardly along the adjacent surfaces of the wedge end of outer strip member 14. The walls 18 and 20 of inner strip member 12 contract toward each other as tongue portions 22 and 24 of the inner strip member move upwardly along the wedge surfaces of outer strip member 14. As the inner strip member is raised upwardly, beginning at the wedge end, as just described, tongue portions 22 and 24 beyond the wedge end become progressively disengaged from grooves 34 and 36 until the two closure strips are completely separated from each other.

There is shown in Fig. 16 a modified embodiment of the invention generally indicated at 200 and including a generally channel-shaped female closure strip generally indicated at 202 having oppositely disposed undercut portions 204 along the length thereof and a male closure strip generally indicated at 206 having tongue-like projections 208 along the length thereof which are adapted to mate with the undercut portions or grooves 204 of the female closure strip 202. At least one of the closure strips 202 or 206 is of flexible material. In accordance with a feature of the modified construction, the tongue-like projections 208 of male closure strip 206 are progressively laterally cut away in the end region as best seen in Figs. 16 and 18 until at the extreme outer end of closure strip 206, tongue portions 208 have been substantially entirely cut away or been reduced to a vanishing point. The undercut portions or grooves 204 of the female closure strip 202 remain of uniform lateral width throughout the entire length of the strip, including the end region. Due to the progressive lateral cutting away of the tongue-like projections 208 of male closure strip 206, the area of interlocking between tongue-like projections 208 and groove portions 204 is progressively laterally reduced until at the extreme outer end of the closure strips there is no interlocking between the projections 208 and the grooves 204. Due to the cutting away of the tongue portions 208, the closure strips may be initially separated in the end region to begin the separation of the two strip members 202 and 206 and once the separation has begun in this manner, the fact that at least one of the strip members is flexible will permit a separation of the remaining portions of the strip members from each other.

In the modified embodiment of Figs. 19 and 20, there is shown a closure generally indicated at 210 including a generally channel-shaped female closure strip 212 and a male closure strip 214 which is received between the walls of the channel-shaped female closure strip 212. At least one of the strip members 212 or 214 is made of flexible material. In this embodiment tongue-like projections 216 are positioned on the opposite interior facing walls of channel-shaped female strip member 212 while corresponding undercut portions or grooves 218 are provided on the outwardly facing surfaces of male closure strip 214 in mating relation with projections 216. As best seen in Fig. 20, projections 216 of female closure strip 212 are progressively laterally cut away in the end region although the grooves 218 with which projections 216 mate remain of constant lateral width throughout their length. The progressive cutting away of projections 216 progressively laterally reduces the area of interlocking between projections 216 and grooves 218 so that the area of interlocking is substantially zero at the outermost end of the strip members. This progressive reduction in the area of interlocking between the tongue-like projections 216 and the undercut portions or grooves 218 permits the easy detachment or engagement of the strip members in the end region as previously described.

There is shown in Fig. 21 a modified embodiment generally indicated at 220 including a generally channel-shaped female closure strip 222 having grooves or undercut portions 224 on the opposite inside facing walls thereof and a male closure strip generally indicated at 226 having tongue-like projections 228 which engage in mating relation with the undercut portions or grooves 224. The closure strips 222 and 226 may be provided with an end construction either similar to that of the embodiments of Figs. 1–15 inclusive in which the outer or female closure strip member is cut away in the end region to reduce the area of interlocking with the projections 228 of the male closure strip, or, alternatively, the end region of strip members 222 and 226 may be similar to that shown in Figs. 16–18 in which the tongue-like projections 228 are progressively laterally reduced in the end region, while the mating grooves remain of substantially constant lateral width. In the embodiment in Fig. 21

the male closure strip 226 is made of rigid material whereas the outer or female closure strip 222 is made of flexible material. Hence, once the separation of the two strip members has been begun in the end region due to the progressively reduced area of interlocking between the tongue portions 228 and the grooves 224, the separation of the two closure strips from one another is effected by an outward flexing of the female closure strip 222 rather than by an inward flexing of the male closure strip as shown in the embodiment of Fig. 3. Similarly, when the strip members 222 and 224 are being engaged together, the female closure strip 224 flexes outwardly as shown in Fig. 21.

It can be seen from the foregoing that there is provided in accordance with this invention a closure device which has great utility and which is economical to manufacture. The inner and outer closure strip members may be made in the form of long strips which are cut to the desired length. The strip members may be made of a wide variety of materials and may be suitably colored in order to combine or blend most advantageously with the materials being joined. The closure members have an interlocking engagement with each other which prevents their accidental disengagement and the closure device may be opened only by raising the end or ends of the inner strip member to cause the inward flexing of the side walls of that member, as previously described, or to cause the outward flexing of the walls of the outer member, as described in connection with the embodiment of Fig. 21.

The closure device is simple and easy in its operation, and cannot jam or bind or refuse to function. The wear and tear on the device is low, since the friction between the members is very slight. The closure device can be be used on a great variety of articles and objects requiring closing or sealing, such as men's and women's garments, shoes, storage containers, card board cartons, gas and liquid containers, traveling bags, paper bags and for many other objects where closing or sealing is necessary. Since the closure can be opened only at either or both ends, the ends may be sealed by the use of a suitable locking device which can thereby make the closure device thief-proof. Only a minimum of distortion of the closure is required for opening or closing. Furthermore, the closure is adapted for mounting on the edges of the material being joined in such manner that the closure itself can be completely covered and eliminated from view, thereby adding to the aesthetic appearance of the device being closed. By suitably selecting the materials from which the closure strips and attached edges are made, the closure device may be made waterproof. By selection of material and color, the closure can be combined with design to form a fashion feature.

While there have been shown and described particular embodiments of the invention, it will be obvious to those skilled in the art that various changes and modifications may be made therein without departing from the invention and, therefore, it is aimed to cover all such changes and modifications as fall within the true spirit and scope of the invention.

What I claim as my invention is:

1. A closure device comprising a first elongated strip member having a pair of longitudinally extending walls laterally spaced from each other along their length to define a recess therebetween, a second elongated strip member received between the walls of said first strip member in mating relation with the recess of said first strip member, said second strip member including longitudinally extending laterally spaced walls respectively facing the walls of said first strip member, one of said strip members being formed with an undercut portion on each of the walls thereof which extends along substantially the entire length thereof to define a first interlocking means, the other of said strip members including projections on the walls thereof defining a second interlocking means and extending continuously along substantially the entire length thereof and engaged with said undercut portions of said one strip member to retain said strip members in interlocked relation with each other, each of said strip members having an end thereof detachably connected to a corresponding end of the other strip member, one only of said interlocking means being progressively laterally cut away in the region of said detachably connected ends of said strip members to reduce the lateral width in transverse cross section of portions of said one interlocking means to values less than those of corresponding portions thereof away from the region of said ends of said strip members, the other of said interlocking means having substantially the same contour and dimensions in the region of said ends as in the region away from said ends, whereby the area of interlocking between said first and second interlocking means is progressively laterally reduced in approaching said ends of said strip members, one of said strip members being made of flexible material, whereby movement of said strip members into or out of engagement with each other adjacent said ends flexes said member made of flexible material to effect release or engagement of said projections with respect to said undercut portions.

2. A closure device comprising a first elongated strip member having a pair of longitudinally extending walls laterally spaced from each other along their length to define a recess therebetween, a second elongated strip member received between the walls of said first strip member in mating relation with the recess of said first strip member, said second strip member including longitudinally extending laterally spaced walls respectively facing the walls of said first strip member, one of said strip members being formed with an undercut portion on each of the walls thereof which extends along substantially the entire length thereof to define a first interlocking means, the other of said strip members including projections on the walls thereof defining a second interlocking means and extending continuously along substantially the entire length thereof and engaged with said undercut portions of said one strip member to retain said strip members in interlocked relation with each other, each of said strip members having an end thereof detachably connected to a corresponding end of the other strip member, said undercut portions respectively including a surface thereof in contiguous relation to the respective projections to define an area of interlocking between the contiguous surfaces of said undercut portions and said projections when said strip members are engaged together, one only of said interlocking means being progressively laterally cut away in the region of said detachably connected ends of said strip members to reduce the lateral width in transverse cross section of portions of said one interlocking means to values less than those of corresponding portions thereof away from the region of said ends of said strip members, the other of said interlocking means having substantially the same contour and dimensions in the region of said ends as in the region away from said ends, whereby the area of interlocking between said contiguous surfaces is progressively laterally reduced in approaching said ends of said strip members, one of said strip members being made of flexible material, whereby movement of said strip members into or out of engagement with each other adjacent said ends flexes said member made of flexible material to effect release or engagement of said projections with respect to said undercut portions.

3. A closure device comprising a first elongated strip member having a pair of longitudinally extending walls laterally spaced from each other along their length to define a recess therebetween, a second elongated strip member made of flexible material and received between the walls of said first strip member in mating relation with the recess of said first strip member, said second strip member including longitudinally extending laterally spaced walls respectively facing the walls of said first strip member, one of said strip members being formed with an undercut por-

tion on each of the walls thereof which extends along substantially the entire length thereof to define a first interlocking means, the other of said strip members including projections on the walls thereof defining a second interlocking means and extending continuously along substantially the entire length thereof and engaged with said undercut portions of said one strip member to retain said strip members in interlocked relation with each other, each of said strip members having an end thereof detachably connected to a corresponding end of the other strip member, said undercut portions respectively including a surface thereof in contiguous relation to the respective projections to define an area of interlocking between the contiguous surfaces of said undercut portions and said projections when said strip members are engaged together, one only of said interlocking means being progressively laterally cut away in the region of said detachably connected ends of said strip members to reduce the lateral width in transverse cross section of portions of said one interlocking means to values less than those of corresponding portions thereof away from the region of said ends of said strip members, the other of said interlocking means having substantially the same contour and dimensions in the region of said ends as in the region away from said ends, whereby the area of interlocking between said contiguous surfaces is progressively laterally reduced in approaching said ends of said strip members, and whereby movement of said second strip member out of or into engagement with said first strip member adjacent said end contracts said second strip member to effect release or engagement of said projections with respect to said undercut portions.

4. A closure device comprising a first elongated strip member having a pair of longitudinally extending walls laterally spaced from each other along their length to define a recess therebetween, each of said walls being formed with an undercut portion which extends along substantially the entire length thereof in bounding relation to said recess to define a first interlocking means, a second elongated strip member made of flexible material and received between the walls of said first strip member in mating relation with the recess of said first strip member, projections defining a second interlocking means formed on said second strip member and extending continuously along substantially the entire length thereof and engaged with said undercut portions of said first strip member to retain said strip members in interlocked relation with each other, each of said strip members having an end thereof detachably connected to a corresponding end of the other strip member, said undercut portions respectively including a surface thereof in contiguous relation to the respective projections to define an area of interlocking between the contiguous surfaces of said undercut portions and said projections when said strip members are engaged together, one only of said interlocking means being progressively laterally cut away in the region of said detachably connected ends of said strip members to reduce the lateral width in transverse cross section of portions of said one interlocking means to values less than those of corresponding portions thereof away from the region of said ends of said strip members, the other of said interlocking means having substantially the same contour and dimensions in the region of said ends as in the region away from said ends, whereby the area of interlocking between said contiguous surfaces is progressively laterally reduced in approaching said ends of said strip members, and whereby movement of said second strip member out of or into engagement with said first strip member adjacent said ends contracts said second strip member to effect release or engagement of said projections with respect to said undercut portions.

5. A closure device comprising a first elongated strip member having a pair of longitudinally extending walls laterally spaced from each other along their length to define a recess therebetween, each of said walls being formed with an undercut portion which extends along substantially the entire length thereof in bounding relation to said recess, a second elongated strip member made of flexible material and received between the walls of said first strip member in mating relation with the recess of said first strip member, projections formed on said second strip member and extending continuously along substantially the entire length thereof and engaged with said undercut portions of said first strip member to retain said strip members in interlocked relation with each other, each of said strip members having an end thereof detachably connected to a corresponding end of the other strip member, each of said walls of said first strip member being progressively cut away longitudinally above the undercut portion thereof in the region of said detachably connected end of said first strip member so that said walls diverge laterally away from each other in approaching said end and the thickness of each wall at said end approaches the thickness of the wall at the base of the undercut portion, said projections of said second strip member having substantially the same contour and dimensions in the portion thereof facing the laterally diverging walls of said first strip member as in the remaining portion of the length of said second strip member, whereby movement of said second strip member out of or into engagement with said first strip member adjacent said end contracts said second strip member to effect release or engagement of said projections with respect to said undercut portions.

6. A closure device comprising a first elongated strip member having a pair of longitudinally extending walls laterally spaced from each other along their length to define a recess therebetween, each of said walls being undercut to provide a groove which extends along substantially the entire length thereof in bounding relation to said recess, a second elongated strip member made of flexible material and received between the walls of said first strip member in mating relation with the recess of said first strip member, tongue means carried on the outer surface of said second strip member and engaged with the grooves of said first strip member to retain said strip members in interlocked relation with each other, each of said strip members having an end thereof detachably connected to a corresponding end of the other strip member, each of said walls of said first strip member being progressively cut away longitudinally above the groove in the region of said detachably connected end of said first strip member so that said walls diverge laterally away from each other in approaching said end and the thickness of each wall at said end approaches the thickness of the wall at the base of the groove, said tongue means of said second strip member having substantially the same contour and dimensions in the region facing the laterally diverging walls of said first strip member as in the remaining portion of the length of said second strip member, whereby movement of said second strip member out of or into engagement with said first strip member adjacent said end contracts said second strip member to effect release or engagement of said tongue means with respect to said grooves.

7. A closure device comprising a first elongated strip member of substantially channel-like form including a base portion and a pair of walls extending from said base portion in laterally spaced relation to each other, each wall of said first strip member being undercut to provide a groove extending along substantially the entire length thereof adjacent the junction of said wall and said base portion, a second elongated strip member made of flexible material and received between the walls of said first strip member, said second strip member being formed with a longitudinally extending recess in the under surface thereof along substantially its entire length, said second strip member being formed with a pair of outwardly turned tongues extending continuously along substantially the entire length thereof, said tongues of said second strip member being adapted to engage the grooves of said first member in interlocked relation, each of said strip members having an end thereof detachably connected to a

corresponding end of the other strip member, each of said walls of said first strip member being progressively cut away longitudinally above the groove in the region of said detachably connected end of said first strip member so that said walls diverge laterally away from each other in approaching said end and the thickness of said walls at said end approaches the thickness of the wall at the base of the groove, said tongues of said second strip member having substantially the same contour and dimensions in the region facing the laterally diverging walls of said first strip member as in the remaining portion of the length of said second strip member, whereby movement of said second strip member out of or into engagement with said first strip member adjacent said end contracts said second strip member to effect release or engagement of said tongues with respect to said grooves.

8. A closure device as defined in claim 7 in which each wall of said first strip member is cut away adjacent said end thereof in such a manner that said walls diverge away from each other in a lateral direction in approaching said base portion of said first strip member.

9. A closure device comprising a first elongated strip member of substantially channel-like form including a base portion and a pair of walls extending from said base portion in laterally spaced relation to each other, each of said walls being undercut to provide a groove which extends along substantially the entire length thereof adjacent the junction of said wall and said base portion, a second elongated substantially channel-shaped strip member made of flexible material and received between the walls of said first strip member, tongue means carried on the outer surface of said second strip member and engaged with the grooves of said first strip member to retain said strip members in interlocked relation with each other, each of said strip members having an end thereof detachably connected to a corresponding end of the other strip member, each of said walls of said first strip member being progressively cut away longitudinally above the groove in the region of said detachably connected end of said first strip member so that said walls diverge laterally away from each other in approaching said end and the thickness of each wall at said end substantially equals the thickness of the wall at the base of the groove, said tongue means of said second strip member having substantially the same contour and dimensions in the region facing the laterally diverging walls of said first strip member as in the remaining portion of the length of said second strip member, whereby movement of said second strip member out of or into engagement with said first strip member adjacent said end contracts said second strip member to effect release or engagement of said tongue means with respect to said grooves.

10. A closure device as defined in claim 9 in which each wall of said first strip member is cut away adjacent said end thereof in such a manner that said walls diverge away from each other in a lateral direction in approaching said base portion of said first strip member.

11. A closure device comprising a first elongated strip member having a pair of longitudinally extending walls laterally spaced from each other along their length to define a recess therebetween, a second elongated strip member received between the walls of said first strip member in mating relation with the recess of said first strip member, said second strip member including longitudinally extending laterally spaced walls respectively facing the walls of said first strip member, one of said strip members being formed with an undercut portion on each of the walls thereof which extends along substantially the entire length thereof to define a first interlocking means, the other of said strip members including projections on the walls thereof defining a second interlocking means and extending continuously along substantially the entire length thereof and engaged with said undercut portions of said one strip member to retain said strip members in interlocked relation with each other, each of said strip members having an end thereof detachably connected to a corresponding end of the other strip member, said projections of said other strip member being progressively laterally cut away in the region of said detachably connected ends of said strip members to reduce the lateral width in transverse section of said projections to values less than those of corresponding portions thereof away from the region of said ends of said strip members, said undercut portion on each of the walls of said one strip member having substantially the same contour and dimensions in the region of said ends as in the region away from said ends, whereby the area of interlocking between said undercut portions and said projections is progressively laterally reduced in approaching said ends of said strip members, one of said strip members being made of flexible material, whereby movement of said strip members into or out of engagement with each other adjacent said ends flexes said member made of flexible material to effect release or engagement of said projections with respect to said undercut portions.

12. A closure device as defined in claim 11 in which said undercut portions are on said first strip member and said projections are on said second strip member.

13. A closure device as defined in claim 12 in which said undercut portions are on said first strip member and said projections are on said second strip member and said second strip member is of flexible material.

14. A closure device as defined in claim 11 in which said undercut portions are on said second strip member and said projections are on said first strip member.

15. A closure device comprising a first elongated strip member having a pair of longitudinally extending walls laterally spaced from each other along their length to define a recess therebetween, a second elongated strip member received between the walls of said first strip member in mating relation with the recess of said first strip member, said second strip member including longitudinally extending laterally spaced walls respectively facing the walls of said first strip member, one of said strip members being formed with an undercut portion on each of the walls thereof which extends along substantially the entire length thereof to define a first interlocking means, the other of said strip members including projections on the walls thereof defining a second interlocking means and extending continuously along substantially the entire length thereof and engaged with said undercut portions of said one strip member to retain said strip members in interlocked relation with each other, each of said strip members having an end thereof detachably connected to a corresponding end of the other strip member, one of said interlocking means being progressively laterally cut away in the region of said detachably connected ends of said strip members to reduce the lateral width in transverse cross section of portions of said one interlocking means to values less than those of corresponding portions thereof away from the region of said ends of said strip members, whereby the area of interlocking between said first and second interlocking means is progressively laterally reduced in approaching said ends of said strip members, each of the walls of said first strip member including a closed outer surface at least in the region of said ends, one of said strip members being made of flexible material, whereby movement of said strip members into or out of engagement with each other adjacent said ends flexes said one member made of flexible material to effect release or engagement of said projections with respect to said undercut portions.

16. A closure device as defined in claim 15 in which said undercut portions are on said first strip member and said projections are on said second strip member, and said undercut portions are progressively laterally reduced in approaching said ends of said strip members.

17. A closure device as defined in claim 15 in which

said undercut portions are on said first strip member and said projections are on said second strip member, and said projections are progressively laterally reduced in approaching said ends of said strip members.

References Cited in the file of this patent

UNITED STATES PATENTS

1,887,741 Trotter ---------- Nov. 15, 1932
2,568,969 Reiss ---------- Sept. 25, 1951
2,655,968 Simmons ---------- Oct. 20, 1953
2,746,502 Graell ---------- May 22, 1956

FOREIGN PATENTS

475,121 Canada ---------- July 10, 1951