C. E. CLEMENT.

TRUCK FOR PRINTING PRESSES.

APPLICATION FILED OCT. 18, 1913.

1,187,505. Patented June 20, 1916.

Fig. 1.

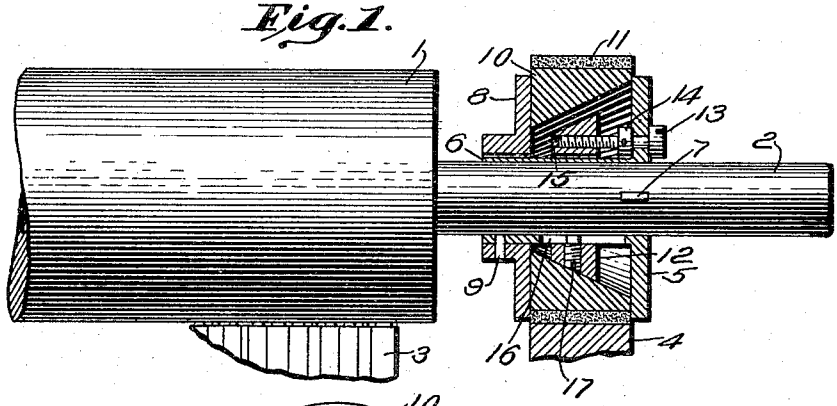

Fig. 2.

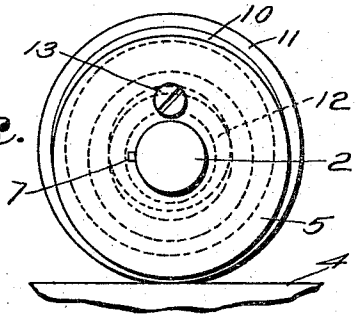

Fig. 3.

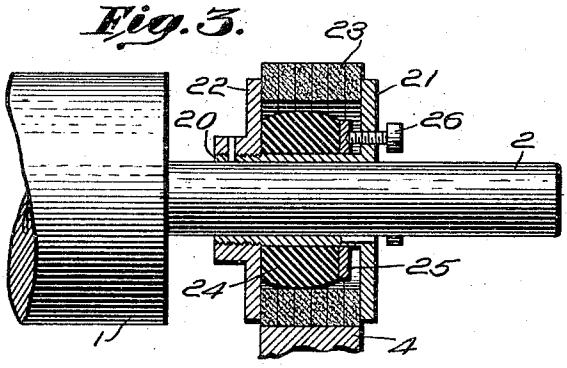

Fig. 4.

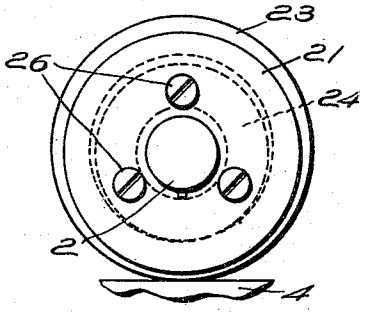

Witnesses,
Roswell F. Hatch.
Beatrice J. Smith.

Inventor;
Charles E. Clement
by Robt. P. Harris.
Atty.

THE COLUMBIA PLANOGRAPH CO., WASHINGTON, D. C.

UNITED STATES PATENT OFFICE.

CHARLES E. CLEMENT, OF BEVERLY, NEW JERSEY.

TRUCK FOR PRINTING-PRESSES.

1,187,505. Specification of Letters Patent. Patented June 20, 1916.

Application filed October 18, 1913. Serial No. 795,897.

To all whom it may concern:

Be it known that I, CHARLES E. CLEMENT, a citizen of the United States, and residing at Beverly, county of Burlington, and State of New Jersey, have invented an Improvement in Trucks for Printing-Presses, of which the following description, in connection with the accompanying drawings, is a specification, like letters on the drawings representing like parts.

The invention to be hereinafter described relates to trucks used to support or impart rotation to the ink-distributing or form rollers on printing presses.

Form rollers are made of a material which shrinks with age and expands and contracts in accordance with the humidity and temperature of the atmosphere. It is essential, in order to obtain the best results, that the form rollers shall bear upon the type in the form with a definite pressure which varies with the work and the character of the ink. It is also of prime importance that the periphery of the roller shall turn at the same speed as the form so as to present a true rolling action. The form rollers are rotated and in some cases supported by trucks operatively connected with the end or ends of the roller shaft and constructed to roll over ways having a fixed relation to the form.

Various attempts have been made to provide means to adjust the relation between the roller and the form by the use of an adjustable truck. These are, however, subject to certain objections common to a solid non-adjustable truck. The truck is liable to slip over its way without turning, thereby causing the ink to be scraped off the roller and fill up the type. In some classes of work the roller is assisted in maintaining its rolling action by friction with the type. When using certain kinds of ink, more especially gold ink, with which the roller must exert very slight pressure upon the type, the friction with the type is practically negligible, and in such work slippage most frequently occurs. This difficulty is so well recognized that many manufacturers will not guarantee their presses to do good work with gold ink. Another objection is that the anti-frictional nature of the material necessarily employed in expansive trucks produces very slight adhesion between the truck and the way, thereby increasing the danger of slippage. Still further difficulty is encountered in certain types of rotary presses in which the trucks are employed only to rotate the form rollers, the pressure upon the type being determined by independent devices. In this instance the truck must bear on its way with sufficient pressure to insure its rolling action, but not hard enough to cause undue friction. This requires a very delicate adjustment as the truck is rigid and constructed of inelastic material.

The object of the present invention, therefore, is to provide a truck adapted to vary the relation of the form and the roller, and which will overcome the objections heretofore encountered in trucks of this character. The various features employed to the accomplishment of this object will best be understood from the following description and accompanying drawings of the embodiments of the invention selected for illustration, it being understood that the invention is not limited in its scope to the details of construction herein set forth, except in so far as is specified in the appended claims.

In the drawings—Figure 1 is an elevation partly in section, of a portion of a form roller and truck; Fig. 2 is an end view of the truck shown in Fig. 1; Fig. 3 is a sectional elevation of an alternative construction of the truck; and Fig. 4 is an end view of the truck of Fig. 3.

The form roller 1 is mounted on a shaft 2 which is carried by a truck on one or both ends, in such relation to the type 3 as to give a pressure thereon in accordance with the nature of the ink and work to be done. Ways 4 having a fixed relation to the printing surface of the type are provided upon which the truck rolls, motion being imparted to the shaft or to the form and way, in accordance with the style of press in use.

The improved truck comprises a flange 5 having a sleeve 6 secured to the shaft by a key 7. A second flange 8 is secured to the end of the sleeve by a pin 9, thus forming a spool on the shaft. A ring 10, having a tapered opening, surrounds the sleeve 6 and is loosely engaged by the flanges 5 and 8. The ring 10 rolls on the way 4, and in order to increase the friction therewith and to provide a slight degree of elasticity in the truck, it may be made from wood and provided with a tire 11 of leather or other suitable material. The movement of the

ring in a plane normal to the axis of the shaft is limited by a frusto-conical collar 12 mounted to slide on the sleeve 6 and preferably complemental to the smaller end of the opening in the ring. It is apparent that when the collar 12 is at the smaller end of the opening in the ring, the ring will be held concentric with the shaft and as the collar is moved axially toward the larger end of the opening, that is, to the right in Fig. 1, a varying amount of lateral movement will be permitted. In view of the fact that the ring engages the way 4, the movement of the collar varies the amount of eccentricity of the ring. The means for moving the collar to adjust the working radius of the truck may comprise a screw 13 rotatably secured in the flange 5 by a collar 14 and engaging a tapped hole 15 in the collar. The sleeve is slotted at 16 to receive the end of a radially disposed screw 17 which holds the collar 12 from rotation with respect to the sleeve. The pressure of the roller 1 upon the type may thus be conveniently adjusted by turning the screw 13.

Rotary motion is transmitted from the ring 10 to the collar 12 through their contacting surfaces and as these surfaces are at an angle to the axis, there is a wedging action against the flange 8 which precludes the possibility of lost motion at that point. The frictional qualities of the leather tire, together with its slight elasticity, gives firm contact with the way 4, the adherence being much greater than is possible to obtain with a solid iron wheel or the expansive trucks heretofore proposed.

The principal distinguishing feature of the alternative construction of the truck resides in its greater degree of elasticity, by which it automatically accommodates itself to slight variations in the diameter of the form roller. The range of adjustment is also somewhat greater than in the form first described.

The alternative construction comprises a sleeve 20 and a flange 21 integral therewith and a flange 22 secured to the sleeve, together forming a spool similar to the one previously described. In this instance, the ring 23 has a straight hole and is illustrated as being formed entirely of leather by cementing together a number of leather washers. A collar 24 of rubber or other elastic material surrounds the sleeve between the flanges. This collar is normally cylindrical in contour, and of sufficient length to nearly fill the space between the flanges. A washer 25 of a diameter somewhat less than the collar, is interposed between the collar and the flange 21. Screws 26 are threaded into the flange and project on the inside where they bear against the washer 25. The working radius of the truck is adjusted by setting up on the screws 26 which compresses the collar 24 longitudinally, thereby increasing its diameter, as shown in Fig. 3. As the diameter increases, less eccentricity is allowed the ring 23, the result being the same as in the previous case. The roller 1 exerts a certain pressure on the type and on account of the great elasticity of this form of truck, it is to some extent self-adjusting, as the rubber will expand to take a part of the load if the pressure on the type is too heavy. In such presses as use the trucks only for rotating the roller, adjustment is not needed to compensate for variation in the roller as the rubber will compress or expand in accordance with the load thereon.

The feature of the present invention which relates to the elastic or yielding support for the roller is of particular importance in connection with presses in which the direction of travel of the roller is changed. Such presses usually employ springs to hold the trucks in contact with the ways. When the direction of travel of the roller is changed, the momentum of the moving parts causes them to leave the ways, and the springs then act to return the parts, causing the trucks to pound on the ways, which soon wears a depression therein. By using a truck having a resilient tire or provision for a yielding movement in the truck, this objectionable feature is overcome.

What is claimed is:—

1. In a truck for form rollers, the combination of a ring in operative relation with the roller, and means for adjusting the position of the ring from concentric relation with the roller to variable degrees of eccentricity therewith.

2. In a truck for form rollers, the combination of a ring freely rotatable about the axis of the roller, and means for adjusting the eccentricity of the ring with respect to said roller.

3. In a truck for form rollers, the combination of a collar to support the roller, a ring of fixed outside diameter and of normally greater interior diameter than the collar surrounding the collar, and means for varying the diameter of the collar.

4. In a truck for form rollers, the combination of a shaft, an elastic collar on the shaft, a ring of fixed outside diameter and of normally greater interior diameter than the collar surrounding the collar, and means for compressing the collar endwise whereby its diameter is increased.

5. In a truck for form rollers, the combination of a shaft, a collar on the shaft, a ring surrounding the collar and mounted for movement in a plane normal to the shaft, and means to vary the diameter of the collar to vary the eccentricity of the ring.

6. In a truck for form rollers, the combi-

nation of a shaft, a ring, flanges to position the ring axially of the shaft, a rubber collar between the flanges, a washer between the collar and the flange, and means to adjust the position of the washer whereby the collar is compressed.

In testimony whereof, I have signed my name to this specification, in the presence of two subscribing witnesses.

CHARLES E. CLEMENT.

Witnesses:
MAURICE E. HUNTER,
ROBERT H. ADAMS.

Copies of this patent may be obtained for five cents each, by addressing the "Commissioner of Patents. Washington, D. C."