US00D626063S

(12) **United States Design Patent**
Cutter et al.

(10) **Patent No.:** **US D626,063 S**
(45) **Date of Patent:** ** **Oct. 26, 2010**

(54) **ELECTRIC VEHICLE CHARGING STATION**

(75) Inventors: **Brian Cutter**, Orinda, CA (US); **David Gustafson**, Sacremento, CA (US); **Howard Nuk**, San Francisco, CA (US); **Jonathan Rowell**, San Francisco, CA (US)

(73) Assignee: **ECOtality, Inc.**, San Francisco, CA (US)

(**) Term: **14 Years**

(21) Appl. No.: **29/363,233**

(22) Filed: **Jun. 7, 2010**

(51) **LOC (9) Cl.** **13-02**
(52) **U.S. Cl.** **D13/107**
(58) **Field of Classification Search** D13/107–110, D13/118–119, 139.5, 184; D14/251, 253, D14/432, 434, 435.1; 320/107–115
See application file for complete search history.

(56) **References Cited**

U.S. PATENT DOCUMENTS

D257,882 S * 1/1981 Rawson et al. D24/186
D280,317 S * 8/1985 Boyd et al. D13/103
5,461,299 A * 10/1995 Bruni 320/108
6,459,234 B2 * 10/2002 Kajiura 320/109
D535,613 S * 1/2007 Varalo et al. D13/108
D556,678 S * 12/2007 Weinstein et al. D13/103
7,746,029 B2 * 6/2010 Toya 320/107

* cited by examiner

Primary Examiner—Rosemary K Tarcza
(74) *Attorney, Agent, or Firm*—Hartman Law PLC; Joseph W. Mott

(57) **CLAIM**

The ornamental design for an electric vehicle charging station, as shown and described.

DESCRIPTION

FIG. **1** is a perspective view of a electric vehicle charging station showing my new design.

FIG. **2** is a front elevational view thereof.

FIG. **3** is a top plan view thereof.

FIG. **4** is a left side elevational view thereof; and,

FIG. **5** is a right side elevational view thereof.

The back of the electric vehicle charging station is flat and unornamented.

1 Claim, 2 Drawing Sheets

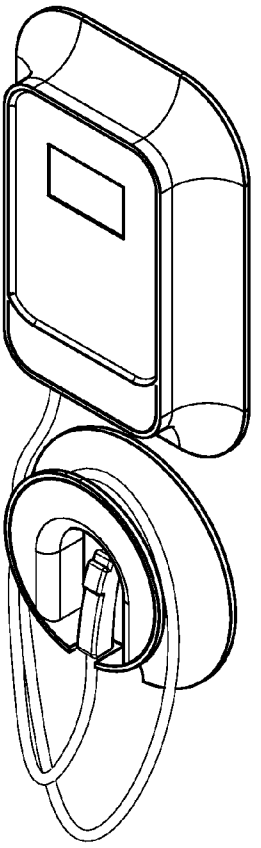

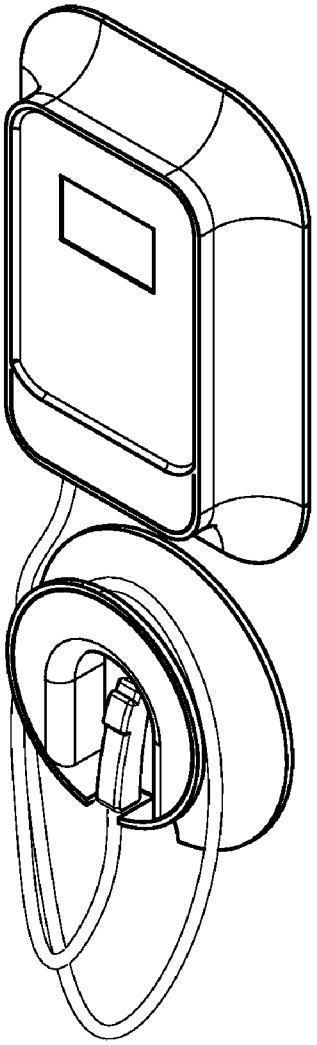

FIG. 1

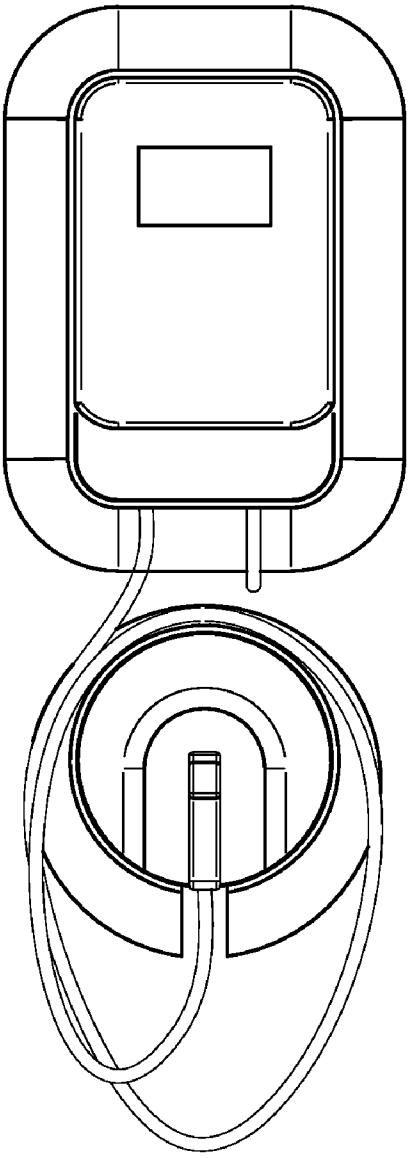

FIG. 2

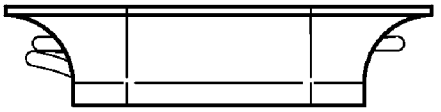

FIG. 3

FIG. 4

FIG. 5