(19) Europäisches Patentamt
European Patent Office
Office européen des brevets

(11) EP 0 825 553 B1

(12) **EUROPEAN PATENT SPECIFICATION**

(45) Date of publication and mention of the grant of the patent:
26.07.2006 Bulletin 2006/30

(51) Int Cl.:
G06F 3/12 *(2006.01)*

(21) Application number: **97114600.6**

(22) Date of filing: **22.08.1997**

(54) **Image processing apparatus and method**

Bildverarbeitungsgerät und -verfahren

Dispositif et méthode de traitement d'image

(84) Designated Contracting States:
DE FR GB

(30) Priority: **23.08.1996 JP 22276296**
08.08.1997 JP 21495797

(43) Date of publication of application:
25.02.1998 Bulletin 1998/09

(73) Proprietor: **CANON KABUSHIKI KAISHA**
Tokyo (JP)

(72) Inventor: **Konishi, Jun**
Ohta-ku,
Tokyo (JP)

(74) Representative: **TBK-Patent**
Bavariaring 4-6
80336 München (DE)

(56) References cited:
EP-A- 0 650 291
EP-A- 0 654 757
WO-A-96/16506
GB-A- 2 288 508
US-A- 5 309 257

Note: Within nine months from the publication of the mention of the grant of the European patent, any person may give notice to the European Patent Office of opposition to the European patent granted. Notice of opposition shall be filed in a written reasoned statement. It shall not be deemed to have been filed until the opposition fee has been paid. (Art. 99(1) European Patent Convention).

EP 0 825 553 B1

Printed by Jouve, 75001 PARIS (FR)

Description

BACKGROUND OF THE INVENTION

[0001] The present invention relates to an image processing apparatus and method for controlling calibration.

[0002] In a conventional printing apparatus, in order to correspond to change and deterioration of formed visual images due to change in environmental conditions and attrition of parts of the printing apparatus, correction processing of an engine unit which is for forming visual images, namely, calibration is performed. Thus, changes in the formed images are corrected, thereby quality of the formed images is maintained. Calibration of a printer is performed by comparing an image to be printed to an actually printed image, and correcting the output characteristics of the printer by the difference between the two images. The calibration has become an indispensable process as resolution of printers increases and more printers print color images.

[0003] However, in the aforesaid printing apparatus, calibration is performed in the engine unit without notifying to a user as to when the calibration is performed and a user can not control the calibration. Therefore, there is a problem in which, even when a user wants to execute an urgent printing job, the user has to wait until calibration is completed once the calibration starts.

[0004] In the EP-A-0 650 291 a color image processing apparatus is disclosed which is capable, in case of outputting a color image, displayed on a color display, by an output device such as a hard copying device, of judging the color reproduction range of each output device with a limited memory capacity, by defining the color reproduction range of each output device by the interior of a hexahedron on a uniform color space and judging whether an input image signal is present inside the hexahedron by the product of the input image signal with an internal point with respect to each plane constituting the hexahedron. According to instructions of a user a printer calibration mode is selected by a host computer for renewing the color reproduction parameters of the printer. The claims are delimited against this document.

[0005] Furthermore, the GB-A-2 288 508 discloses an image processing method carried out by a system in which a client system automatically logs client data and retrieves image data to produce a job file which is automatically transmitted to a modem of an image processing system. A control image processor automatically monitors the job file and carries out routing operations and also supervisor notification operations to ensure efficient and effective implementation of the image processing method as required by the client. Each of the workstations is capable of automatic configuration for particular job types by setting image processing parameter values such as memory and virtual memory settings. At set intervals a calibration program stored on a disk of each processor automatically generates a display to indicate that the associated video screen should be calibrated. When the command is input by the operator, a sub-program is activated to control recordal of actual color values using a sensor.

SUMMARY OF THE INVENTION

[0006] The present invention has been made in consideration of the above situation, and has as its object to provide an image processing apparatus and method capable of controlling execution time of calibration so as to be performed at an optimized time.

[0007] According to the present invention, the foregoing object is achieved by an image processing apparatus according to claim 1 and an image processing method according to claim 5.

[0008] According to the image processing apparatus and method of the present invention it is possible to control execution time of calibration. Therefore, depending upon the types of printing jobs, e.g., an urgent printing job and a printing job requiring quality, and the conditions of the printing apparatus, it is possible to achieve optimized operational environment for each printing job.

[0009] Further, when there is no instruction to perform calibration by a user, it is possible to determine optimized execution time of calibration depending upon each printing job and printing conditions and execute the calibration at the determined time.

[0010] Other features and advantages of the present invention will be apparent from the following description taken in conjunction with the accompanying drawings, in which like reference characters designate the same or similar parts throughout the figures thereof.

BRIEF DESCRIPTION OF THE DRAWINGS

[0011] The accompanying drawings, which are incorporated in and constitute a part of the specification, illustrate embodiments of the invention and, together with the description, serve to explain the principles of the invention.

Fig. 1 is a block diagram illustrating a configuration of a host computer and a printer;

Fig. 2 is an example of a displayed setting guide image used for setting execution time of calibration;

Fig. 3 is a flowchart showing an algorithm for determining execution time of calibration according to a first embodiment;

Fig. 4 is a flowchart showing an algorithm for determining execution time of calibration when the choice "automatic" is selected in the first embodiment;

Fig. 5 is a flowchart showing an algorithm for controlling the printer by the host computer;

Fig. 6 is a flowchart showing an algorithm of calibration control processing according to the first embodiment;

Fig. 7 is a block diagram illustrating a configuration

of the host computer;
Fig. 8 is a cross sectional view of the printer;
Fig. 9 is a block diagram illustrating a control configuration of a printer;
Fig. 10 is a view showing an arrangement of an intermediate transfer body and sensors;
Fig. 11 is a block diagram illustrating a control configuration of a unit for detecting density of an image formed on the intermediate transfer body of the " printer;
Fig. 12 is a flowchart showing an algorithm for determining execution time of calibration according to a second embodiment of the present invention;
Fig. 13 is a flowchart showing an algorithm of calibration control processing according to the second embodiment;
Fig. 14 is a flowchart showing an algorithm for determining execution time of calibration when a calibration request is received in a case where the choice "automatic" is selected according to the second embodiment; and
Fig. 15 shows a memory map of a program realizing a control algorithm according to embodiments.

DETAILED DESCRIPTION OF THE PREFERRED EMBODIMENTS

<First Embodiment>

[0012] A first embodiment of the present invention will be described in detail in accordance with the accompanying drawings.

[Configuration of a Printer System]

[0013] Fig. 1 is a block diagram illustrating a configuration of a host computer 101 and a printer 102 according to the first embodiment. The host computer 101 transmits print information including print data and control codes to the printer 102. Further, the host computer 101 is connected to the printer 102 via a bidirectional communication line, and obtains conditions of the printer 102 and a calibration request, for example, from the printer 102. The printer 102 includes a printer engine 122 having a printing mechanism for forming a desired visual image on a recording paper sheet, and a control unit 121 which includes a controller 211 for controlling the entire printing apparatus, a printer controller 212 for controlling the printing mechanism, and an interface (I/F) controller 213 for controlling interfacing with the host computer 101.

[0014] When calibration need to be performed, the printer engine 122 sends a calibration request to the control unit 121, in turn, the control unit 121 transmits the request to the host computer 101.

[0015] Applications 111 are software for a user to generate desired data, and if an operating system of the host computer 101 is Windows™ operating system by Microsoft Corporation, the applications 111 include graphic display interface (GDI), for example. The applications 111 function by being executed by a CPU (not shown) which controls the host computer 101.

[0016] A data processing unit 112 generates print data and control codes to be outputted from the printer 102 on the basis of data transmitted from the applications 111. An data input/output (I/O) controller 113 sends the print data and the control codes transmitted from the data processing unit 112 to an interface (I/F) controller 114. Further, the data I/O controller 113 analyzes information on conditions of the printer 102 inputted from the printer 102 via the I/F controller 114. When the input from the printer 102 is a calibration request, the data I/O controller 113 performs various controls depending upon the settings indicated by a user or a status of a printing job, and, if it is necessary to inform a user of the calibration request from the printer 102, the data I/O controller 113 sends data to be displayed on a state display unit 115. The I/F controller 114 controls interface with the printer 102 and controls transmission of print information including print data and control codes to the printer 102 and reception of information from the printer 102.

[0017] The state display unit 115 displays data transmitted from the data I/O controller 113 by displaying it. A setting unit 116 is means for setting execution time of calibration.

[Configuration of the Host Computer]

[0018] Fig. 1 shows a logical configuration of the host computer 101 expressed in a software viewpoint, and the physical configuration of the host computer 101 is as shown in Fig. 7. More specifically, a program stored in a main memory 1012 is executed by a CPU 1011, thereby performing the function of the application software. Processings which will be explained later with reference to flowcharts are also executed by the CPU 1011. Conditions, and the like, of the printer 102 and the host computer 101 are displayed on a display unit 1013. An operator performs, for example, settings of calibration which will be explained later, via a keyboard and a pointing device 1015. Further, programs, data, and so on, are stored in an external storage unit 1014 as files.

[Calibration]

[0019] Next, calibration which is performed in the printer 102 is explained in more detail.

[0020] Fig. 8 is a cross sectional view showing a brief configuration of the printer 102 adopting electrophotographic method. The printer 102 of the first embodiment is a laser beam color printer. In this printer 102, a laser beam modulated on the basis of image data of each color component obtained from print data inputted from the host computer 101 scans an electrostatic drum 15 by using a scanner unit 30 including a polygon mirror 31, thereby a latent image is formed. Then, the latent image is developed with toner to obtain a visual image. Visual

images of all the color components obtained in the aforesaid manner are transferred onto an intermediate transfer body 9, thereby forming a color visual image. Then, the color visual image is transferred on a transfer medium 2, and fixed on it. An image forming unit which controls the aforesaid processing includes a drum unit 13 having the electrostatic drum 15, a primary charger having a contact charge roller 17, a cleaning unit, developing units, the intermediate transfer body 9, a paper feed unit including a paper feed cassette 1 and various rollers 3, 4, 5 and 7, a transfer unit including a transfer roller 10, and a fixing unit 25.

[0021] The electrostatic drum (electrostatic body) 15 and a cleaner container 14, having a cleaning mechanism, which functions as a holder of the electrostatic drum 15 are integrally configured to form the drum unit 13. The drum unit 13 is supported so as to be detachable from a main body of the printer 102 so that it can be easily exchanged when the life time of the electrostatic drum 15 has passed. The electrostatic drum 15 is configured with an aluminum cylinder whose peripheral is covered with an organic photoconductor layer, and ratably supported by the cleaner container 14. The electrostatic drum 15 is rotated by a driving motor (not shown), and the driving motor makes the electrostatic drum 15 rotate in the counter-clockwise direction as the image forming operation proceeds. The surface of the electrostatic drum 15 is selectively exposed by the laser beam from the scanner unit 30, thereby a latent image is formed. In the scanner unit 30, a modulated laser beam is reflected by the polygon mirror 31 which rotates in synchronization with a horizontal synchronizing signal, and incidents on the electrostatic drum 15 via a lens 32 and a mirror 33.

[0022] The developing units includes three color developing units 20Y, 20M and 20C for developing latent images in yellow (Y), magenta (M) and cyan (C), respectively, and a black developing unit 21B for developing a latent image in black (B). Sleeves 20YS, 20MS, 20CS and 21BS and applying blades 20YB, 20MB, 20CB and 21BB which press against peripherals of the sleeves 20YS, 20MS, 20CS and 21BS are provided to the color developing units 20Y, 20M and 20C and the black developing unit 21B, respectively. Further, applying rollers 20YR, 20MR and 20CR are also provided to the three color developing units 20Y, 20M and 20C, respectively.

[0023] Further, the black developing unit 21B is installed in the main body of the printer 102 so as to be detachable, and the color developing units 20Y, 20M and 20C are installed in a developer rotary 23 which rotates about a rotation axis 22 so as to be detachable.

[0024] The sleeve 21BS of the black developing unit 21B is installed near the electrostatic drum 15 at a very small distance of, e.g., 300 μm. In the black developing unit 21B, toner is charged by friction as it is conveyed by a built-in conveying member, so that the toner is applied on the peripheral of the sleeve 21BS, rotating in the clockwise direction, by the applying blade 21BB. Further, By applying developing bias voltage to the sleeve 21BS, a latent image on the electrostatic drum 15 is developed, thereby forming a visual image with black toner on the electrostatic drum 15.

[0025] The three color developing units 20Y, 20M and 20C rotate in accordance with the rotation of the developer rotary 23 when forming an image, and a predetermined sleeve 20YS, 20MS or 20CS faces to the electrostatic drum 15 at a very small distance of 300 μm, for example. Accordingly, the predetermined color developing unit 20Y, 20M or 20C stops at a developing position facing to the electrostatic drum 15, thereby a visual image is formed on the electrostatic drum 15.

[0026] When forming a color image, the developer rotary 23 rotates in response to each rotation of the intermediate transfer body 9, and images are sequentially developed by the yellow developing unit 20Y, the magenta developing unit 20M, the cyan developing unit 20C, then the black developing unit 21B. Therefore, in four rotations of the intermediate transfer body 9, visual images of yellow, magenta, cyan and black toner are sequentially formed, and, as a result, a full-color visual image is formed on the intermediate transfer body 9.

[0027] The intermediate transfer body 9 is in contact with the electrostatic drum 15 so as to rotate together with the rotation of the electrostatic drum 15. Therefore, the intermediate transfer body 9 rotates in the clockwise direction when forming a color image, and four visual images developed by toner of four color component sequentially are transferred overlapped to the intermediate transfer body 9 from the electrostatic drum 15. Further, the intermediate transfer body 9 simultaneously transfers the color visual image formed on it to the transfer medium 2 conveyed by the transfer roller 10, which will be explained later, so as to be in contact with the intermediate transfer body 9. Around the intermediate transfer body 9, a TOP sensor 9a and an RS sensor 9b, which will be explained later with reference to Fig. 10, for detecting predetermined positions on the intermediate transfer body 9, and a density sensor 9c, which will be also explained later with reference to Fig. 10, for detecting the density of the toner image transferred on the intermediate transfer body 9 are provided.

[0028] The transfer roller 10 has a transfer charger supported so as to be detachable and in contact with or separated from the electrostatic drum 15, and is configured with a metal rod wound with a medium resistance foam elastic body.

[0029] The transfer roller 10 is at a position separated from the intermediate transfer body 9, as shown by a solid line in Fig. 8, during visual images of each color are transferred onto the intermediate transfer body 9 so as not to disturb a color visual image on the intermediate transfer body 9. Then, after the color visual image in four colors is formed on the intermediate transfer body 9, the transfer roller 10 is moved upward to a position, shown by a broken line in Fig. 8, by a cam member (not shown) in synchronization with time for transferring the color visual image onto the transfer medium 2. Accordingly, the

transfer roller 10 is brought in contact with the intermediate transfer body 9 via the transfer medium 2 upon application of a predetermined pressure. At the same time, a bias voltage is applied to the transfer roller 10, thereby the color visual image on the intermediate transfer body 9 is transferred onto the transfer medium 2.

[0030] The fixing unit 25 is for fixing the color visual image on the transfer medium 2 while conveying it, and has a fixing roller 26 for heating the transfer medium 2 and a pressing roller 27 for pressing the transfer medium 2 against the fixing roller 26 as shown in Fig. 8. The fixing roller 26 and the pressing roller 27 have hollows inside, and heaters 28 and 29 are installed there, respectively. Thereby, as the transfer medium 2 holding the color visual image is conveyed by the fixing roller 26 and the pressing roller 27, toner is fixed on the surface of the transfer medium 2 by heat and pressure.

[0031] The transfer medium 2 on which the visual image is fixed is discharged to a paper discharge unit 37 by paper discharging rollers 34 to 36, thereby image forming processing completes.

[0032] Cleaning means is for cleaning residual toner on the electrostatic drum 15 and the intermediate transfer body 9. Toner waste remained on the electrostatic drum 15 after transferring a visual toner image onto the intermediate transfer body 9 and toner waste remained on the intermediate transfer body 9 after transferring a color visual image of four colors onto the transfer medium 2 are stored in the cleaner container 14.

[0033] Fig. 9 is a block diagram illustrating a control configuration of the printer 102 shown in Fig. 8. The printer 102 is roughly divided into the control unit 121 and the printer engine 122. In the control unit 121, reference numeral 200 denotes a video interface (I/F) for interfacing with the host computer 101 which controls the printer 102. The video I/F 200 corresponds to the I/F controller 213 in Fig. 1. The controller 211 includes an image processing gate array 209 for applying processes, such as y correction, to image data received through the video I/F 200, an image formation unit 208 for outputting an image by controlling, e.g., a laser and a scanner motor, and a main control CPU 201 for controlling each of above units as well as controlling a mechanical-unit-control CPU 202 as a sub-CPU. The mechanical-unit-control CPU 202 controls a driving unit 203a such as a motor, a clutch and a fan, a sensor unit 203b for detecting positions of a recording medium, a paper feed controller 204 for controlling supply of a recording paper sheet, and a high voltage controller 205. The mechanical-unit-control CPU 202 corresponds to the printer controller 212.

[0034] Further, the printer engine 122 includes the driving unit 203a, such as a motor, the sensor unit 203b for detecting a position of a recording medium, a fixing unit 206, a sensor unit 207, such as a temperature humidity sensor and a sensor for detecting the remaining amount of toner, the paper feed controller 204, and the high voltage controller 205 used for charging.

[0035] Fig. 10 is a view showing an arrangement of an intermediate transfer body 9 and sensors. The intermediate transfer body 9 is configured with an aluminum cylinder whose peripheral surface is covered with an elastic layer 11, such as a medium resistance sponge and a medium resistance rubber. Further, around the intermediate transfer body 9, the TOP sensor 9a for detecting start position of image formation, the RS sensor 9b for detecting start time for feeding paper, and the density sensor 9c.

[0036] The density sensor 9c is used for density control, namely calibration, so as to print an image in correct colors. More specifically, the density sensor 9c detects density of a developer image formed on the intermediate transfer body 9 as a test image for density detection of each color. Then, the detected density is fed back to image forming conditions, such as luminous exposure and a developing bias voltage, thereby density control for forming an image in colors of an original image is performed. Accordingly, images of steady quality are obtained. As described in Japanese Patent Application No. 7-92385, there are two types of density control methods; one is DMAX control and the other is half-tone control. In the DMAX control, with fixed luminous exposure, a test developer image is formed while altering a developing bias voltage. The density of the developer image is measured, and a developing bias voltage value corresponding to reference density of each color is calculated. In the half-tone control, with a fixed developing bias voltage a test developing image is formed while altering luminous exposure in several levels by a controller. The density of the developer image is measured, and the obtained result is fed back to the controller. Then, the controller generates a γ table on the basis of the measured result.

[0037] Time for initiating density control would be when power is turned on (while waiting until the fixing unit reaches a predetermined temperature), when the developing unit is changed, when the electrostatic drum cartridge is changed, when the intermediate transfer body is changed, when environmental conditions are noticeably changed from those when the density control is performed previously, and when a predetermined number of pages has been printed.

[0038] Fig. 11 is a block diagram illustrating a configuration of a control unit for detecting density of an image (calibration) by using the density sensor 9c, and the control unit is included in the sensor 207. The density sensor 9c is configured with an infrared ray emitter 400 and an infrared ray receptor 401. An infrared ray Io emitted form the infrared ray emitter 400 is reflected by the surface of the intermediate transfer body 9, and the quantity of light of the reflected ray Ir is detected by the infrared ray receptor 401. The reflected ray Ir whose quantity of light is detected by the infrared ray receptor 401 is monitored by an LED controller 403, and a signal representing the quantity of light of the reflected ray Ir is transmitted to the main control CPU 201. The main control CPU 201 calculates the density on the basis of the detected value of the emitted infrared ray Io and the reflected ray Ir, and

controls a developing bias voltage.

[0039] With the aforesaid configuration, the printer 102 performs calibration of density at a predetermined time.

[Calibration Control]

[0040] Fig. 2 is an example of a displayed setting guide image used for setting execution time of calibration by the setting unit 116 of the host computer 101. The time is set by selecting from choices, "execute immediately", "execute after completing job", "automatic" and "execute depending upon the number of remaining pages". When the choice "execute depending upon the number of remaining pages" is selected, the reference number of pages which determines execution time is also set. When the choice "execute depending upon the number of remaining pages" is set, the host computer 101 checks the number of remaining pages of the printing job which is in progress when a calibration request is received, and when the number of remaining pages registered in the host computer is equal or greater than the reference number of pages, calibration is performed. When the choice "automatic" is selected, execution time of calibration is determined depending upon the characteristics of a printing job or the number of remaining pages.

[0041] Fig. 3 is a flowchart showing an algorithm for determining execution time of calibration on the basis of the content selected on the setting screen shown in Fig. 2. Depending upon the selected contents, flags and a variable page-count are set. The flags and the variable page-count is used for determining the execution time of calibration when a calibration request is received. The details of processing for determining execution time of calibration will be explained with reference to the flowchart in Fig. 3.

[0042] In step 301, the flags and counter are all cleared. the flags and count used for determining execution time of calibration are an "immediate execution flag", an "execute-after-job-completion (EAJC) flag", and the variable page-count. The variable page-count is a variable to be compared with the number of remaining pages of a printing job which is in progress when the choice "execute depending upon the number of remaining pages" is selected as execution time of calibration.

[0043] At step 302, the setting of the calibration inputted in accordance with the displayed contents shown in Fig. 2 is read. At step 303, whether or not the choice "execute immediately" is selected is checked, and if it is, the process proceeds to step 304 where the immediate execution flag is set and the processing is completed. If the choice "execute immediately" is not selected, the process moves to step 305 where whether or not the choice "execute after completing job" is selected is checked. If it is, the process proceeds to step 306 where the EAJC flag is set and the processing is completed. If the choice "execute after completing job" is not selected, the process proceeds to step 307 where whether or not the choice "execute depending upon the number of remaining pages" is selected is determined. If it is, then a reference number of pages is inputted at step 308, the reference number of pages is set to the variable page-count at step 309, and the processing is completed. If the choice "execute depending upon the number of remaining pages" is not selected, processes for determining execution time of calibration when the choice "automatic" is selected is performed at step 310, and the processing shown in Fig. 3 is completed.

[0044] Fig. 4 is a flowchart showing an algorithm for determining execution time of calibration at step 310, performed in the host computer 101, when the choice "automatic" is selected. Characteristics and the number of pages of a printing job which is to be transmitted from the host computer 101 to the printer 102 are determined, and depending upon the determined result, execution time is determined either to immediate execution, execution after completing job, or execution depending upon the number of remaining pages. Details of the processing will be explained below with reference to the flowchart in Fig. 4.

[0045] In step S401, whether the printing job is to print a color image or to print a monochromatic image is determined. If a color image is to be printed, the immediate execution flag is set at step 402, and if a monochromatic image is to be printed, the process moves to step 403. The reason for setting the immediate execution flag in step 402 is that, when the printing job is to print a color image, it is considered that a required print quality is very high. The determination on whether the printing job is to print a color image or to print a monochromatic image is performed by obtaining the contents of setting set by a user by the data processing unit 112, for example. Further, it is also possible to determine whether the printing job is to print a color image or to print a monochromatic image by distinguishing data when processing it in the data processing unit 112.

[0046] In step 403, whether the printing job to be processed includes image data or not is determined, and if it does, the process proceeds to step 404, whereas if it does not, the process proceeds to step 407. Determination on whether or not the printing job includes image data is performed by obtaining the contents of setting set by a user by the data processing unit 112. Further, the determination may be also performed by distinguishing the data when processing it in the data processing unit 112, or by obtaining the type of application program used for generating the printing job.

[0047] In a case where the printing job to be processed includes image data, whether or not the printing job has equal or more than 5 pages is determined, and if it is, the process proceeds to step 405 where the immediate execution flag is set. If it is not, the process moves to step 406 where the EAJC flag is set.

[0048] The reason for setting the immediate execution flag in step 405 is that, in a case where the printing job includes image data, it is considered that relatively high print quality is required, and the number of pages to be

printed is relatively large. In such case, therefore, it is preferred to execute calibration immediately after a calibration request is received.

[0049] The reason for setting the EAJC flag in step 406 is that, although it is considered that relatively high print quality is required since the printing job includes image data, the number of pages to be printed is small. In such case, it is preferred to execute calibration after completing the printing job. The number of pages of the printing job is checked by inquiring to basic system, such as an operating system, on which the printing system of the first embodiment operates. Further, it is also possible to obtain the number of pages by distinguishing data of the printing job when processing it by the data processing unit 112. In a case where the printing job does not include image data, the variable page-count is set to 50 at step 407 and the processing is completed.

[0050] If the printing job is to print a monochromatic image and does not include image data, it is considered that the required print quality is not so high. Therefore, even in a case where calibration is requested before such the printing job is finished, it is basically considered better to wait to perform calibration until the printing job is completed. However, if execution time of calibration is set to perform always after completing such printing job, in a case where the number of remaining pages of the printing job is large, the number of pages printed before executing calibration is large, and it takes considerably long before initiating calibration after the calibration is requested. Therefore, by setting a predetermined number to the variable page-count, execution time of calibration is determined depending upon the contents of the printing job when the calibration request is received. The above is the reason for setting a predetermined number to the variable page-count in step 407.

[0051] According to the above procedure, calibration is immediately executed when the immediate execution flag is set, performed after a printing job is completed when the EAJC flag is set, and, when a predetermined value is set to the variable page-count, performed immediately if the number of pages to be printed is equal or greater than the predetermined value.

[0052] Fig. 5 is a flowchart showing an algorithm of processing for the host computer 101 when outputting print data and control data to the printer 102, and when receiving a calibration request or other states from the printer 102. When the host computer 101 receives a calibration request from the printer 102, it controls execution of calibration on the basis of the immediate execution flag, the EAJC flag, or the variable page-count. Details of the processing are explained below with reference to the flowchart shown in Fig. 5.

[0053] In step 501, whether the printer 102 is ready for printing or not is determined. If it is, the process proceeds to step 502, whereas if it is not, the process moves to step 510.

[0054] In step 502, the host computer 101 receives information on condition of the printer 102, and in step 503, whether a calibration request is issued or not is determined on the basis of the transmitted condition information. If there is a calibration request, calibration control processing (will be explained later in detail) is performed in step 504 and the process proceeds to step 505. In step 505, whether or not there is data to be outputted is determined. If there is, the print data is outputted to the printer 102 in step 506, thereafter, the process returns to step 501.

[0055] Whereas, if there is no data to be outputted, whether or not printing processing is completed or not is checked in step 507. If it is not, the process returns to step 501, whereas if it is, the process moves to step 508. In step 508, whether or not the EAJC flag is set is determined. If it is not, the process is completed, whereas, if it is, a calibration execution instruction is outputted to the printer 102 in step 509, then the process is completed.

[0056] Further, if the printer 102 is not ready for printing in step 501, information on printing conditions is inputted from the printer 102 to the host computer 101, an error message is displayed on the basis of the information on printing conditions in step 511, and the process returns to step 501.

[0057] Fig. 6 is a flowchart showing an algorithm of calibration control processing performed in step 504. When the host computer 101 receives a calibration request from the printer 102, it controls execution of calibration on the basis of the flags and count. Details of the processing will be explained below with reference to the flowchart in Fig. 6.

[0058] In step 601, whether the immediate execution flag is set or not is determined. If it is, the host computer 101 outputs a calibration execution instruction to the printer 102 in step 602 and displays a message indicating that the calibration is in progress in step 603. Then in step 604, the process waits until the host computer 101 receives notification indicating completion of calibration from the printer 102, and the processing is completed.

[0059] If it is determined that the immediate execution flag is not set in step 601, then whether the EAJC flag is set or not is determined in step 605. If it is, the processing is completed, whereas if it is not, the process moves to step 606.

[0060] In step 606, the number of remaining pages of the printing job which is currently undergoing is obtained. In step 607, the obtained number of remaining pages and the variable page-count are compared. If the variable page-count is larger than the obtained number of remaining pages, then the process proceeds to step 608 where the EAJC flag is set and the processing is completed.

[0061] Whereas, if the obtained number of remaining pages is equal or larger than the variable page-count, then the host computer 101 issues a calibration execution instruction to the printer 102 in step 609 and displays a message indicating that calibration is in progress. After the process waits until a notification of completion of calibration is inputted from the printer 102 in step 611, then the processing is completed.

[0062] The number of remaining pages of the printing job currently undergoing is obtained by inquiring to the host computer 101. Further, it is also possible to obtain the number of remaining pages by distinguishing data from the printer 102 when controlling data of the printing job by the data I/O controller 113.

[0063] As described above, it is possible to determine execution time of calibration in accordance with an instruction by an operator or by program control. Therefore, when an urgent printing job is to be performed, execution of calibration is postponed until the printing job is completed even when calibration is requested. In addition, in a case where it is preferred to perform calibration before initiating a printing job, calibration is performed before initiating the printing job, whereas if there is no preference about execution time of calibration, it is possible to it so as to complete a printing job first.

<Second Embodiment>

[0064] In the first embodiment, when the choice "automatic" is set for determining execution time of calibration, the execution time of calibration is determined in advance depending upon whether the printing job currently undergoing is to print a color image or to print a monochromatic image, whether or not the printing job includes image data, and the number of pages. However, it is possible to use other methods for determining the execution time of calibration when a calibration request is received. In this case, the configurations of the apparatuses are the same as those explained in the first embodiment, and processing sequence is almost the same as that explained in the first embodiment. However, the processing for setting execution time of calibration shown in Fig. 3, the calibration control processing shown in Fig. 6, and the sequence of automatic determination on execution time of calibration in Fig. 4 are different. The following explanation is mainly about the differences.

[0065] Fig. 12 is a flowchart showing an algorithm for determining execution time of calibration on the basis of the content selected on the setting guide screen shown in Fig. 2. Differing from to Fig. 3, in a case where the choice "automatic" is selected, automatic determination on execution time of calibration is not performed at this point. The other processes are the same as those explained in the first embodiment. Therefore, when the choice "automatic" is set, the flags and count remain 0 which is set in step 301.

[0066] In a case where the host computer 101 outputs print data and control data to the printer 102, and a case where the host computer 101 receives a calibration request and other information on printing conditions from the printer 102, the processing shown in Fig. 5 is performed as in the first embodiment.

[0067] Fig. 13 is a processing sequence when a calibration request is received by the host computer 101. In Fig. 13, the processes which are the same as those shown in Fig. 6 are referred by the same reference numerals. In order to dynamically perform automatic setting, first in step 801, values of the flags and counter are checked, and whether or not all the values are 0 is tested. If they are all 0, then it is determined that the choice "automatic" is selected, and the process branches into processing of "automatic determination on execution time of calibration". Otherwise, processes same as those in Fig. 6 are performed on the basis of the set values of the flags and count.

[0068] Fig. 14 is a flowchart showing an algorithm for determining execution time of calibration when a calibration request is received in a case where the choice "automatic" is selected in Fig. 2. Differences between the processing shown in Fig. 14 and shown in Fig. 4 in the first embodiment is that the EAJC flag is only flag set, and, when the EAJC flag is not set, calibration is directly executed without setting the immediate execution flag. This is because execution time of calibration is not determined in advance, and calibration is controlled when calibration is requested in accordance with state of a printing job at the time. Details of processing will be explained below with reference to Fig. 14.

[0069] In step 701, whether the printing job which is in progress is to print a color image or to print a monochromatic image is determined. If it is to print a color image, calibration is performed in step 702. Calibration processing performed in step 702 is the same as the processes in steps 602 to 604 or steps 609 to 611 explained with reference to Fig. 6. More specifically, the calibration processing includes processes of outputting a calibration execution instruction to the printing unit 102, displaying a message indicating that calibration is in progress, and waiting for a notification of completion of calibration from the printer 102.

[0070] In a case of printing a monochromatic image, the process proceeds to step 703, where whether the printing job currently undergoing includes image data or not is determined. If the printing job includes image data, the process proceeds to step 704, whereas if it does not, the process proceeds to step 707. In step 704, whether or not the number of remaining pages of the printing job currently undergoing is equal or greater than 5 pages is determined. If it is, the process proceeds to step 705 where calibration processing is performed, whereas if it is not, the process proceeds to step 706 where the EAJC flag is set.

[0071] In step 707, whether the number of remaining pages of the printing job currently undergoing is equal or more than 20 pages or not is determined. If it is, the process proceeds to step 708 where calibration processing is performed, whereas, if it is not, the EAJC flag is set in step 709.

[0072] The reason for immediately performing calibration when printing a color image is that there is a fear of deterioration of image. Further, the reason for immediately performing calibration when the number of remaining pages is equal or greater than 5 pages if image data is included in the printing job, whereas performing cali-

bration when the number of remaining pages is equal or greater than 20 pages if image data is not included in the printing job is that it takes time to print images which include image data.

[0073] By automatically determining execution time of calibration as described above, calibration is performed at the optimized time depending upon the state of a printing job which is undergoing at the time when calibration is requested.

[0074] Note, in the first embodiment, when execution time of calibration is automatically set, it is determined on the basis of whether a printing job is to print a color image or to print a monochromatic image, whether or not image data is included in the printing job, and the number of pages of the printing job being in progress. However, other parameters may be used for determining execution time of calibration. For example, a factor which affects determination on whether a printing job is to be immediately processed or not may be used as a parameter for determining execution time of calibration. Further, other determination methods are possible.

[0075] Furthermore, the numbers of pages of the printing job used for determining execution time of calibration are not limited to those used in the first embodiment.

[0076] The numbers of pages of the printing job used for determining execution time of calibration in the second embodiment are not limited to those described above, neither.

[0077] The present invention can be applied to a system constituted by a plurality of devices (e.g., host computer, interface, reader, printer) or to an apparatus comprising a single device (e.g., copying machine, facsimile machine).

[0078] Further, the object of the present invention can be also achieved by providing a storage medium storing program codes for performing the aforesaid processes to a system or an apparatus, reading the program codes with a computer (e.g., CPU, MPU) of the system or apparatus from the storage medium, then executing the program.

[0079] In this case, the program codes read from the storage medium realize the functions according to the embodiments, and the storage medium storing the program codes constitutes the invention.

[0080] Further, the storage medium, such as a floppy disk, a hard disk, an optical disk, a magneto-optical disk, CD-ROM, CD-R, a magnetic tape, a non-volatile type memory card, and ROM can be used for providing the program codes.

[0081] Furthermore, besides aforesaid functions according to the above embodiments are realized by executing the program codes which are read by a computer, the present invention includes a case where an OS (operating system) or the like working on the computer performs a part or entire processes in accordance with designations of the program codes and realizes functions according to the above embodiments.

[0082] Furthermore, the present invention also includes a case where, after the program codes read from the storage medium are written in a function expansion card which is inserted into the computer or in a memory provided in a function expansion unit which is connected to the computer, CPU or the like contained in the function expansion card or unit performs a part or entire process in accordance with designations of the program codes and realizes functions of the above embodiments.

[0083] In a case where the present invention is applied to the aforesaid storage medium, the storage medium stores program codes corresponding to the flowcharts described in the embodiments. Briefly, the storage medium stores each module shown as an example of a memory map in Fig. 15.

[0084] More specifically, program codes which correspond to a setting module for setting execution time of calibration, and a control module for executing calibration at set time when calibration is requested from a printer, at least, are to be stored in the storage medium.

[0085] As described above, an image processing apparatus and method of the present invention control the execution time of calibration. Therefore, depending upon types of printing jobs, e.g., an urgent printing job and a printing job requiring quality, and the conditions of the printing apparatus, it is possible to achieve optimized operational environment for each printing job.

[0086] Further, when there is no instruction to perform calibration by a user, it is possible to determine optimized execution time of calibration depending upon each printing job and printing conditions and execute the calibration at the determined time.

[0087] A host computer does not instruct to initiate calibration immediately when calibration is requested by a printer. The host computer instructs to initiate calibration at time which is designated by an operator. As for the execution time of calibration to be designated, time right after calibration is requested, and time when a printing job is completed are included. Further, when automatic determination for determining execution time of calibration is designated, the execution time is determined on the basis of state of a printing job to be executed, or state of a printing job in progress. As for the state of a printing job, there are the number of remaining pages of the printing job, color printing or monochromatic printing, whether image data is included or not, for example. Accordingly, depending upon the state of the printing job, an optimized execution time of calibration is determined.

Claims

1. An image processing apparatus (101) for controlling a printing device (102) by performing bidirectional communication with the printing device, the printing device having a calibration function, said apparatus comprising:

   control means (1011) for controlling to perform

calibration; and
output means (113) for outputting a calibration execution command to the printing device,

characterized by:

setting means (116; 1015) for setting an execution condition of calibration; and
reception means (113) for receiving a request for calibration from the printing device,
wherein said control means (1011) is adapted to determine an execution time of calibration requested by the printing device, on the basis of the execution condition set by said setting means and a status of a job being executed when calibration is requested by the printing device, and
said output means (113) is adapted to output the calibration execution command to the printing device according to the execution time of calibration determined by said control means.

2. The image processing apparatus according to claim 1, wherein, when an automatic execution condition is set by said setting means as the execution condition of calibration, as execution time of calibration
immediate execution is determined by the control means if the job is to print a color image or if the number of unprocessed pages is equal or greater than a predetermined number and the job includes image data;
after-job-completion execution is determined by the control means if the number of unprocessed pages is less than the predetermined number and the job includes image data; and
page designation execution is determined by the control means otherwise.

3. The image processing apparatus according to claim 1 or 2, wherein said setting means is adapted to set the execution condition of calibration as:

immediate execution for instructing to execute calibration immediately when calibration is requested by the printing device;
after-job-completion execution for instructing to execute calibration after completing a printing job in progress; and
page designation execution for instructing to immediately execute calibration when a number of unprocessed pages of the printing job in progress is equal or greater than a predetermined value, otherwise instructing to execute calibration after completing the printing job.

4. The image processing apparatus according to claim 1, wherein the printing device adopts an electrophotographic method, and the calibration includes calibration of density of an image formed with a developer.

5. An image processing method for controlling a printing device (102), the printing device having a calibration function, the method comprising the steps of:

controlling to perform calibration; and
outputting (509) a calibration execution command to the printing device,

characterized by the steps of:

setting (302-310 in Fig. 3, 302-309 in Fig. 12) an execution condition of calibration;
receiving (503) a request for calibration from the printing device; and
in the controlling step, determining (601-611 in Fig. 6, 601-611 in Fig. 13) an execution time of calibration requested by the printing device, on the basis of the execution condition set in said setting step and a status of a job being executed when calibration is requested by the printing device,
wherein the calibration execution command is output to the printing device according to the execution time of calibration determined in said determining step.

6. The image processing method according to claim 5, wherein, when an automatic execution condition is set in said setting step, in said controlling step, as the execution time of calibration,
immediate execution is determined (S402, S405; S702) if the job is to print a color image (S401; S701) or if the number of unprocessed pages is equal or greater than a predetermined number and the job includes image data (S403, S404; S703, S704);
after-job-completion execution is determined (S406; S706) if the number of unprocessed pages is less than the predetermined number and the job includes image data (S403, S404; S703, S704); and
page designation execution (S307; S707-S709) is determined otherwise.

7. The image processing method according to claim 5 or 6, wherein, as the execution condition for calibration set in said setting step,
immediate execution is set (S303) for instructing to execute calibration immediately when calibration is requested by the printing device;
after-job-completion execution is set (S305) for instructing to execute calibration after completing a printing job in progress; and
page designation execution is set (S307) for instructing to immediately execute calibration when a number of unprocessed pages of the printing job in progress is equal or greater than a predetermined

value, otherwise instructing to execute calibration after completing the printing job.

8. The image processing method according to any one of claims 5 to 7, wherein the printing device adopts an electrophotographic method, and the calibration includes calibration of density of an image formed with a developer.

Patentansprüche

1. Bildverarbeitungsgerät (101) zum Steuern eines Druckers (102) durch Ausführen bidirektionaler Übertragung mit dem Drucker, der über eine Kalibrierfunktion verfügt, mit:

einem Steuermittel (1011) zum Steuern des Ausführens der Kalibrierung; und mit
einem Ausgabemittel (113) zur Ausgabe eines Kalibrierungsausführbefehls an den Drucker,

gekennzeichnet durch:

ein Einstellmittel (116; 1015) zum Einstellen einer Ausführungsbedingung des Kalibrierens; und
ein Empfangsmittel (113) zum Empfangen einer Kalibrieranforderung aus dem Drucker,
wobei das Steuermittel (1011) eingerichtet ist zum Bestimmen einer Ausführungszeit des vom Drucker angeforderten Kalibrierens auf der Grundlage der vom Einstellmittel eingestellten Ausführungsbedingung und eines Status von einem Auftrag, der ausgeführt wird, wenn der Drucker das Kalibrieren angefordert hat, und wobei
das Ausgabemittel (113) eingerichtet ist zur Abgabe des Kalibrierungsausführbefehls gemäß der Ausführungszeit des vom Steuermittel bestimmten Kalibrierens an den Drucker.

2. Bildverarbeitungsgerät nach Anspruch 1, bei dem im Falle, daß das Einstellmittel als automatische Ausführungsbedingung eine Ausführungsbedingung zum Kalibrieren eingestellt hat, bestimmt das Steuermittel die Ausführungszeit folgendermaßen:

unverzügliches Ausführen, wenn der Auftrag das Drucken eines Farbbildes ist oder wenn die Anzahl der unverarbeiteten Seiten gleich oder größer als eine vorbestimmte Anzahl ist und der Auftrag Bilddaten enthält;
Ausführen nach Auftragserledigung, wenn die Anzahl unverarbeiteter Seiten geringer als die vorbestimmte Anzahl ist und der Auftrag Bilddaten enthält; und
anderenfalls Ausführen einer Seitenbestimmung.

3. Bildverarbeitungsgerät nach Anspruch 1 oder 2, dessen Einstellmittel eingerichtet ist, die Ausführungsbedingung des Kalibrierens einzustellen als:

unverzügliche Ausführung zum Anweisen des Ausführens des unverzüglichen Kalibrierens, wenn der Drucker das Kalibrieren angefordert hat;
Nachauftragsabschlußausführung zum Anweisen des Ausführens vom Kalibrieren nach Abschluß des in Ausführung befindlichen Druckauftrags; und als
Seitenbestimmungsausführung zum Anweisen der unverzüglich auszuführenden Kalibrierung, wenn die Anzahl unverarbeiteter Seiten des in Ausführung befindlichen Druckauftrags gleich oder größer als ein vorbestimmter Wert ist, anderenfalls zum Anweisen, das Kalibrieren nach Abschluß des Druckauftrags auszuführen.

4. Bildverarbeitungsgerät nach Anspruch 1, dessen Drucker ein elektrophotographisches Verfahren anwendet und dessen Kalibrierung das Kalibrieren der Dichte eines mit Entwickler erzeugten Bildes umfaßt.

5. Bildverarbeitungsverfahren zum Steuern eines Druckers (102), der über eine Kalibrierfunktion verfügt, mit den Verfahrensschritten:

Steuern zum Ausführen des Kalibrierens; und
Abgeben (509) eines Kalibrierungsausführbefehls an den Drucker,

gekennzeichnet durch die Verfahrensschritte:

Einstellen (302 bis 310 in Fig. 3, 302 bis 309 in Fig. 12) einer Ausführbedingung des Kalibrierens;
Empfangen (503) einer Anforderung aus dem Drucker zum Kalibrieren; und
Bestimmen (601 bis 611 in Fig. 6, 601 bis 616 in Fig. 13) im Steuerschritt einer Ausführungszeit des von dem Drucker angeforderten Kalibrierens auf der Grundlage der im Einstellschritt eingestellten Ausführungsbedingung, und wobei ein Status des Auftrags zur Ausführung kommt, wenn der Drucker das Kalibrieren angefordert hat,

wobei der Kalibrierungsausführbefehl entsprechend der Ausführungszeit des im Bestimmungsschritt bestimmten Kalibrierens an den Drucker ergeht.

6. Bildverarbeitungsverfahren nach Anspruch 5, das im Steuerschritt vom Einstellmittel eingestellte automatische Ausführungsbedingung als Ausführungszeit

des Kalibrierens folgendes bestimmt:

unverzügliches Ausführen (S402, S405; S702), wenn der Auftrag das Drucken eines Farbbildes (S401; S701) ist oder wenn die Anzahl der unverarbeiteten Seiten gleich oder größer als eine vorbestimmte Anzahl ist und der Auftrag Bilddaten enthält (S403, S404; S703, S704);
Ausführen nach Auftragserledigung (S406; S706), wenn die Anzahl unverarbeiteter Seiten geringer als die vorbestimmte Anzahl ist und der Auftrag Bilddaten enthält (S403, S404; S703, S704); und
anderenfalls Ausführen einer Seitenbestimmung (S307; S707 bis S709).

7. Bildverarbeitungsverfahren nach Anspruch 5 oder 6, das die Ausführungsbedingung des Kalibrierens einstellt als:

unverzügliches Ausführen (S303) zum Anweisen des unverzüglichen Ausführens vom Kalibrieren, wenn der Drucker das Kalibrieren angefordert hat;
Nachauftragsabschlußausführung (S305) zum Anweisen des Ausführens vom Kalibrieren nach Abschluß eines in Ausführung befindlichen Druckauftrags; und als
Seitenbestimmungsausführung (S307) zum Anweisen der unverzüglich auszuführenden Kalibrierung, wenn eine Anzahl unverarbeiteter Seiten des in Ausführung befindlichen Druckauftrags gleich oder größer als ein vorbestimmter Wert ist, anderenfalls zum Anweisen, das Kalibrieren nach Abschluß des Druckauftrags auszuführen.

8. Bildverarbeitungsverfahren nach einem der Ansprüche 5 bis 7, bei dem der Drucker ein elektrophotographisches Verfahren anwendet und das Kalibrieren Dichtekalibrieren des mit Entwickler erzeugten Bildes einschließt.

Revendications

1. Appareil de traitement d'image (101) pour commander un dispositif d'impression (102) en effectuant une communication bidirectionnelle avec le dispositif d'impression, le dispositif d'impression ayant une fonction d'étalonnage, ledit appareil comprenant :

un moyen de commande (1011) pour commander l'exécution de l'étalonnage ; et
un moyen de sortie (113) pour délivrer en sortie une commande d'exécution d'étalonnage au dispositif d'impression,

caractérisé par :

un moyen de réglage (116 ; 1015) pour régler une condition d'exécution de l'étalonnage ; et
un moyen de réception (113) pour recevoir une demande d'étalonnage du dispositif d'impression,
dans lequel ledit moyen de commande (1011) est conçu pour déterminer un temps d'exécution de l'étalonnage demandé par le dispositif d'impression, sur la base de la condition d'exécution réglée par ledit moyen de réglage et d'un état d'une tâche en cours d'exécution lorsque l'étalonnage est demandé par le dispositif d'impression, et
ledit moyen de sortie (113) est conçu pour délivrer en sortie la commande d'exécution d'étalonnage au dispositif d'impression en fonction du temps d'exécution de l'étalonnage déterminé par ledit moyen de commande.

2. Appareil de traitement d'image selon la revendication 1, dans lequel, lorsqu'une condition d'exécution automatique est réglée par ledit moyen de réglage comme condition d'exécution de l'étalonnage, en tant qu'instant d'exécution de l'étalonnage :

une exécution immédiate est déterminée par le moyen de commande si la tâche consiste à imprimer une image en couleur ou si le nombre de pages non traitées est égal ou supérieur à un nombre prédéterminé et si la tâche contient des données d'image ;
une exécution après achèvement de la tâche est déterminée par le moyen de commande si le nombre de pages non traitées est inférieur au nombre prédéterminé et si la tâche comprend des données d'image ; et
une exécution de désignation de page est déterminée par le moyen de commande dans les autres cas.

3. Appareil de traitement d'image selon la revendication 1 ou 2, dans lequel ledit moyen de réglage est conçu pour régler la condition d'exécution de l'étalonnage en tant que :

exécution immédiate pour fournir une instruction d'exécution immédiate de l'étalonnage lorsque l'étalonnage est demandé par le dispositif d'impression ;
exécution après achèvement de la tâche pour fournir une instruction d'exécution de l'étalonnage après qu'une tâche d'impression en cours a été achevée ; et
exécution d'une désignation de page pour fournir une instruction d'exécution immédiate d'un étalonnage lorsque le nombre de pages non trai-

tées de la tâche d'impression en cours est égal ou supérieur à une valeur prédéterminée, et dans les autres cas, fournir une instruction d'exécution de l'étalonnage après que la tâche d'impression a été achevée.

4. Appareil de traitement d'image selon la revendication 1, dans lequel le dispositif d'impression utilise un procédé électrophotographique et l'étalonnage comprend l'étalonnage de densité d'une image formée avec un agent de développement.

5. Procédé de traitement d'image pour commander un dispositif d'impression (102), le dispositif d'impression ayant une fonction d'étalonnage, le procédé comprenant les étapes consistant à :

commander l'exécution d'un étalonnage ; et
délivrer en sortie (509) une commande d'exécution d'étalonnage au dispositif d'impression,

caractérisé par les étapes consistant à :

régler (302-310 sur la figure 3, 302-309 sur la figure 12) une condition d'exécution de l'étalonnage ;
recevoir (503) une demande d'étalonnage du dispositif d'impression ; et
lors de l'étape de commande, déterminer (601-611 sur la figure 6, 601-611 sur la figure 13) un instant d'exécution de l'étalonnage demandé par le dispositif d'impression sur la base de la condition d'exécution réglée lors de ladite étape de réglage et d'un état d'une tâche en cours d'exécution lorsque l'étalonnage est demandé par le dispositif d'impression,
dans lequel la commande d'exécution d'étalonnage est délivrée en sortie au dispositif d'impression en conformité avec l'instant d'exécution d'étalonnage déterminé lors de ladite étape de détermination.

6. Procédé de traitement d'image selon la revendication 5, dans lequel, lorsqu'une condition d'exécution automatique est réglée lors de ladite étape de réglage, pendant ladite étape de commande, en tant qu'instant d'exécution de l'étalonnage,
une exécution immédiate est déterminée (S402, S405 ; S702) si la tâche consiste à imprimer une image en couleur (S401 ; S701) ou si le nombre de pages non traitées est égal ou supérieur à un nombre prédéterminé et si la tâche comprend des données d'image (S403, S404 ; S703, S704) ;
une exécution après achèvement de la tâche est déterminée (S406 ; S706) si le nombre de pages non traitées est inférieur au nombre prédéterminé et si la tâche comprend des données d'image (S403, S404 ; S703, S704) ; et
une exécution de désignation de page (S307 ; S707-S709) est déterminée dans les autres cas.

7. Procédé de traitement d'image selon la revendication 5 ou 6, dans lequel, en tant que condition d'exécution de l'étalonnage réglée lors de ladite étape de réglage,
une exécution immédiate est réglée (S303) pour fournir une instruction consistant à exécuter immédiatement un étalonnage lorsqu'un étalonnage est demandé par le dispositif d'impression ;
une exécution après achèvement de la tâche est réglée (S305) pour fournir une instruction consistant à exécuter l'étalonnage après achèvement d'une tâche d'impression en cours ; et
une exécution de désignation de page est réglée (S307) pour fournir une instruction consistant à exécuter immédiatement un étalonnage lorsque le nombre de pages non traitées de la tâche d'impression en cours est égal ou supérieur à une valeur prédéterminée, et dans les autres cas pour fournir une instruction consistant à exécuter un étalonnage après achèvement de la tâche d'impression.

8. Procédé de traitement d'image selon l'une quelconque des revendications 5 à 7, dans lequel le dispositif d'impression utilise un procédé électrophotographique, et l'étalonnage comprend l'étalonnage de la densité d'une image formée avec un agent de développement.

FIG. 1

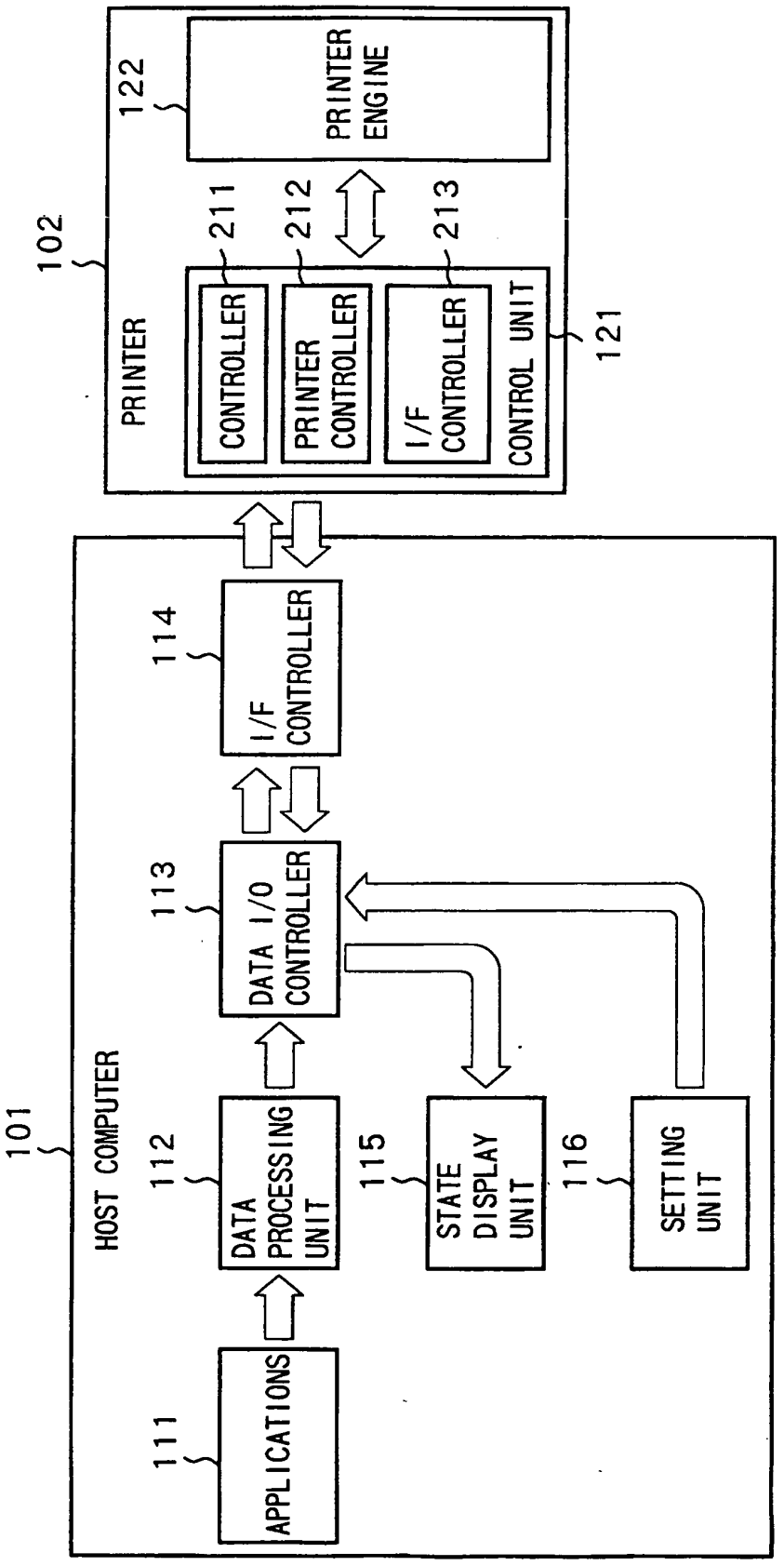
HOST COMPUTER
101
APPLICATIONS
111
DATA PROCESSING UNIT
112
DATA I/O CONTROLLER
113
I/F CONTROLLER
114
STATE DISPLAY UNIT
115
SETTING UNIT
116
PRINTER
102
CONTROLLER
211
PRINTER CONTROLLER
212
I/F CONTROLLER
213
CONTROL UNIT
121
PRINTER ENGINE
122

FIG.2

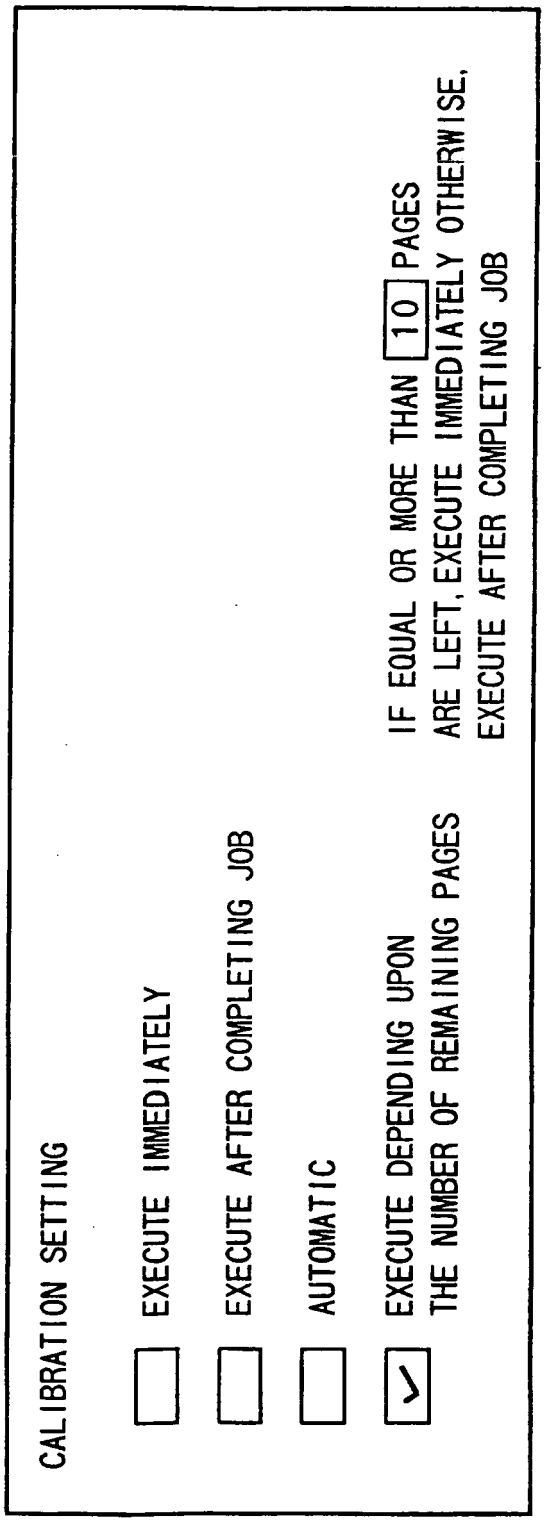
CALIBRATION SETTING
EXECUTE IMMEDIATELY
EXECUTE AFTER COMPLETING JOB
AUTOMATIC
EXECUTE DEPENDING UPON THE NUMBER OF REMAINING PAGES
IF EQUAL OR MORE THAN 10 PAGES ARE LEFT, EXECUTE IMMEDIATELY OTHERWISE, EXECUTE AFTER COMPLETING JOB

FIG.3

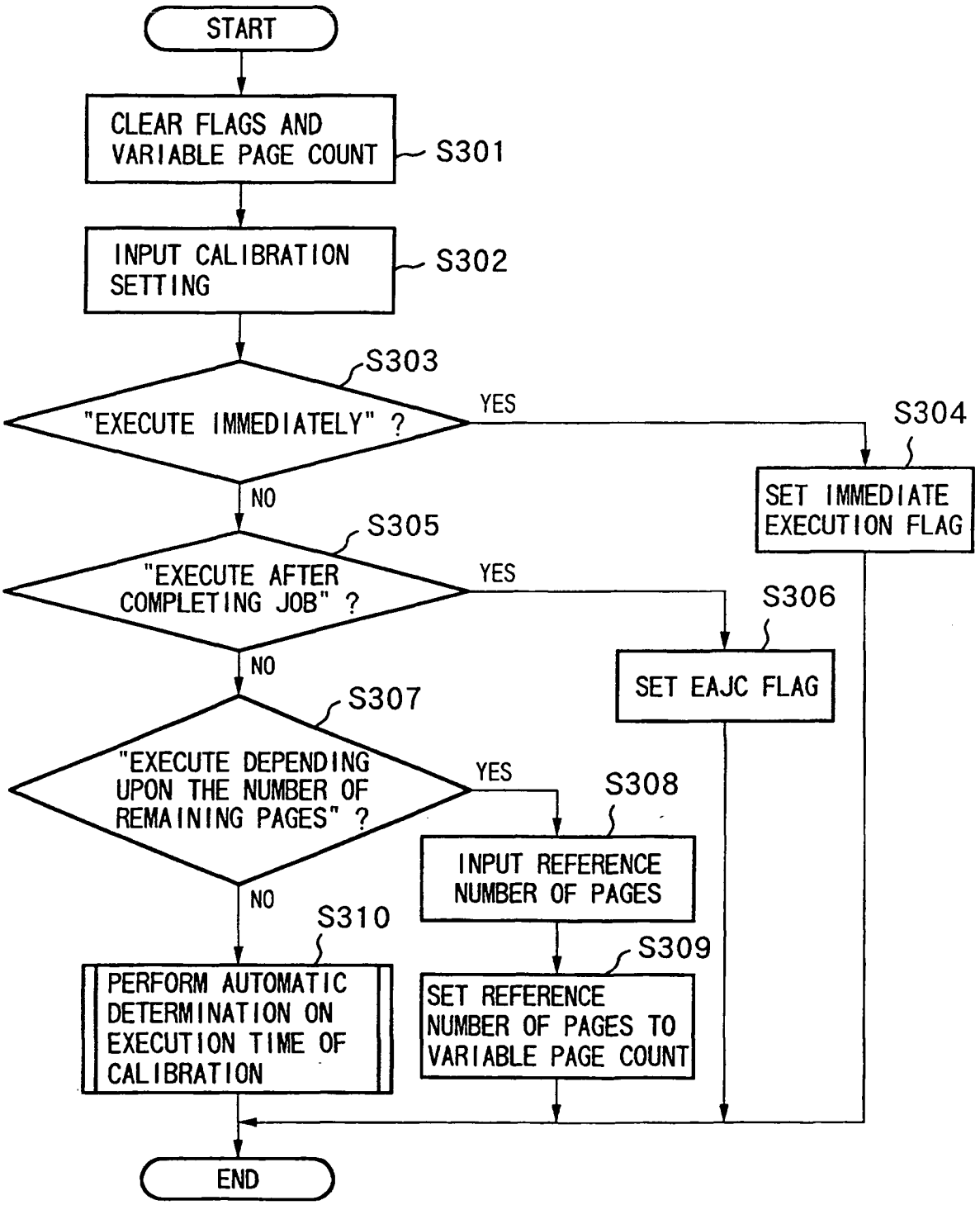
START
CLEAR FLAGS AND VARIABLE PAGE COUNT
S301
INPUT CALIBRATION SETTING
S302
S303
"EXECUTE IMMEDIATELY" ?
YES
S304
SET IMMEDIATE EXECUTION FLAG
NO
S305
"EXECUTE AFTER COMPLETING JOB" ?
YES
S306
SET EAJC FLAG
NO
S307
"EXECUTE DEPENDING UPON THE NUMBER OF REMAINING PAGES" ?
YES
S308
INPUT REFERENCE NUMBER OF PAGES
S309
SET REFERENCE NUMBER OF PAGES TO VARIABLE PAGE COUNT
NO
S310
PERFORM AUTOMATIC DETERMINATION ON EXECUTION TIME OF CALIBRATION
END

FIG.4

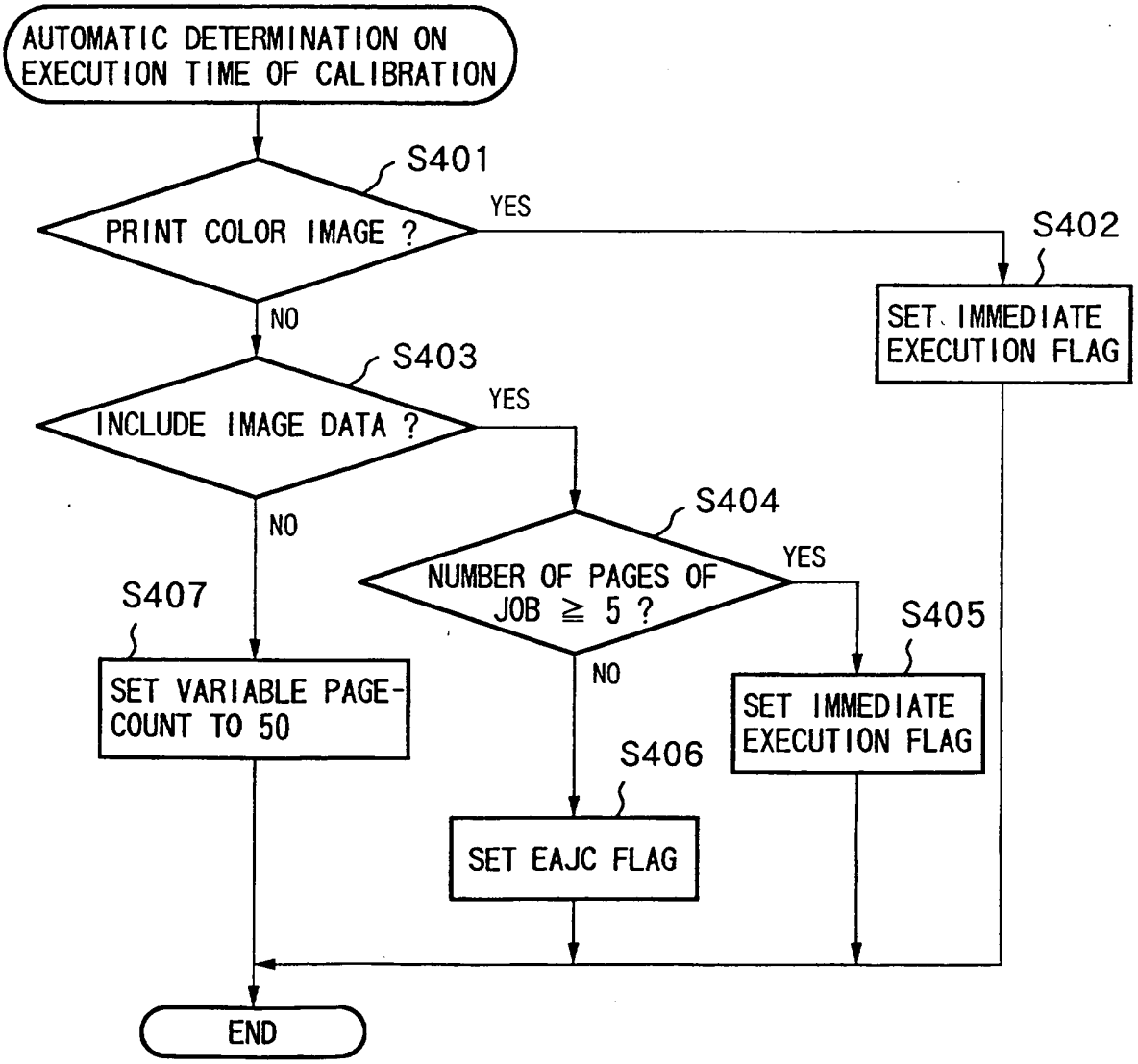
AUTOMATIC DETERMINATION ON EXECUTION TIME OF CALIBRATION
S401
PRINT COLOR IMAGE ?
YES
S402
SET IMMEDIATE EXECUTION FLAG
NO
S403
INCLUDE IMAGE DATA ?
YES
NO
S404
NUMBER OF PAGES OF JOB ≧ 5 ?
YES
S405
SET IMMEDIATE EXECUTION FLAG
NO
S406
SET EAJC FLAG
S407
SET VARIABLE PAGE-COUNT TO 50
END

FIG.5

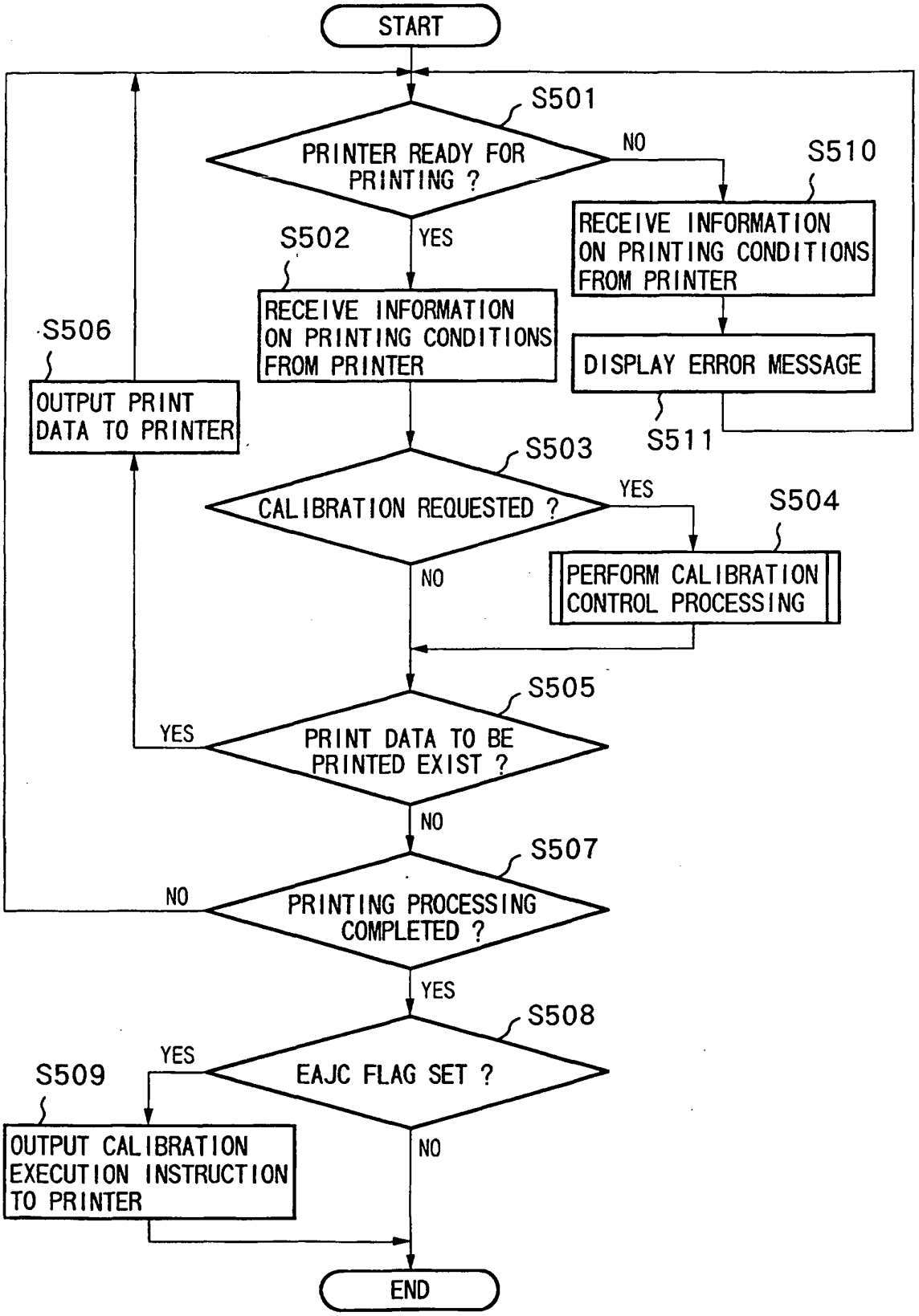
START
S501
PRINTER READY FOR PRINTING ?
NO
S510
RECEIVE INFORMATION ON PRINTING CONDITIONS FROM PRINTER
DISPLAY ERROR MESSAGE
S511
YES
S502
RECEIVE INFORMATION ON PRINTING CONDITIONS FROM PRINTER
S506
OUTPUT PRINT DATA TO PRINTER
S503
CALIBRATION REQUESTED ?
YES
S504
PERFORM CALIBRATION CONTROL PROCESSING
NO
S505
PRINT DATA TO BE PRINTED EXIST ?
YES
NO
S507
PRINTING PROCESSING COMPLETED ?
NO
YES
S508
EAJC FLAG SET ?
YES
S509
OUTPUT CALIBRATION EXECUTION INSTRUCTION TO PRINTER
NO
END

FIG.6

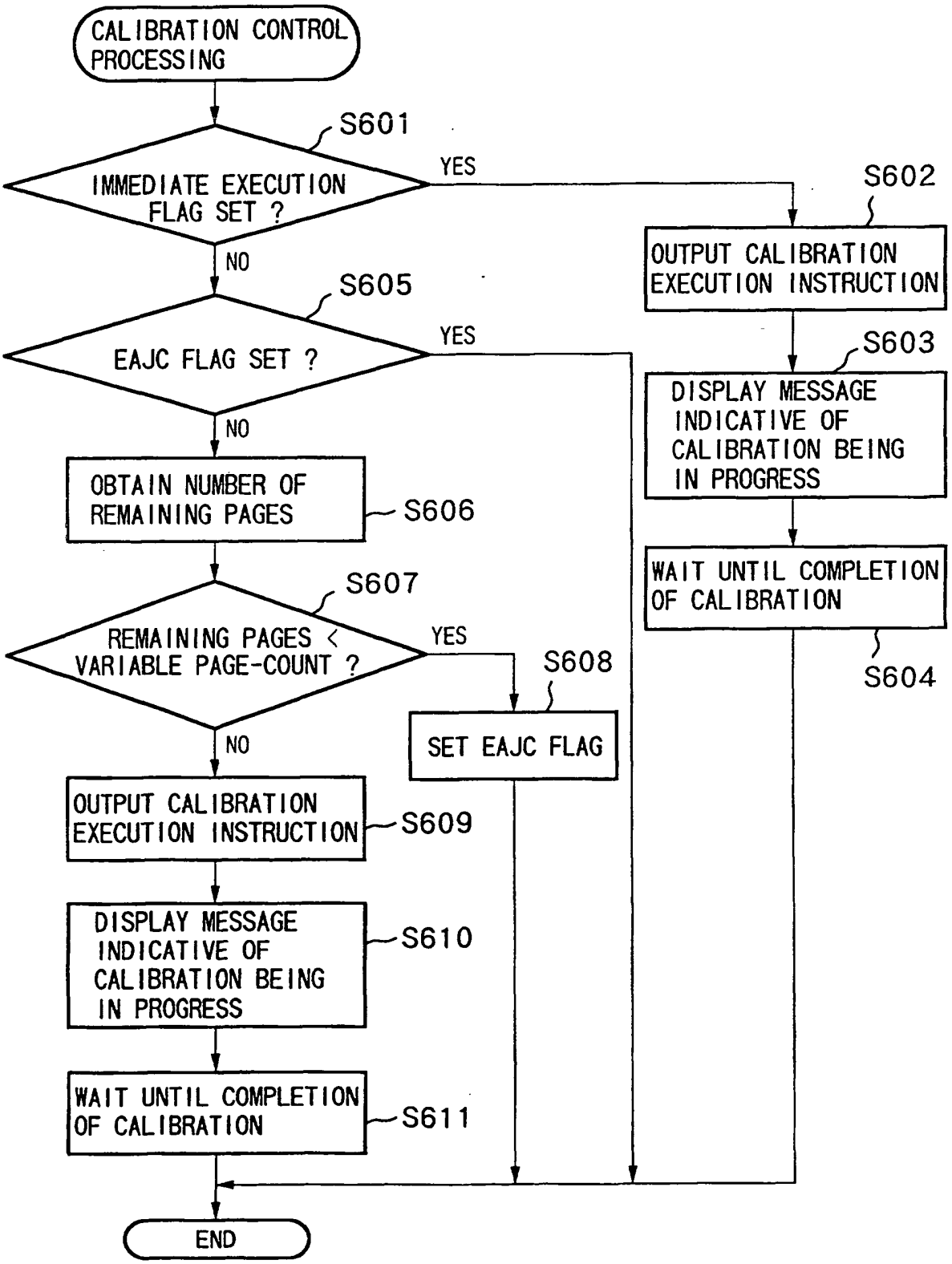
CALIBRATION CONTROL PROCESSING
S601
IMMEDIATE EXECUTION FLAG SET ?
YES
S602
OUTPUT CALIBRATION EXECUTION INSTRUCTION
NO
S605
EAJC FLAG SET ?
YES
S603
DISPLAY MESSAGE INDICATIVE OF CALIBRATION BEING IN PROGRESS
NO
OBTAIN NUMBER OF REMAINING PAGES
S606
WAIT UNTIL COMPLETION OF CALIBRATION
S604
S607
REMAINING PAGES < VARIABLE PAGE-COUNT ?
YES
S608
SET EAJC FLAG
NO
OUTPUT CALIBRATION EXECUTION INSTRUCTION
S609
DISPLAY MESSAGE INDICATIVE OF CALIBRATION BEING IN PROGRESS
S610
WAIT UNTIL COMPLETION OF CALIBRATION
S611
END

FIG.7

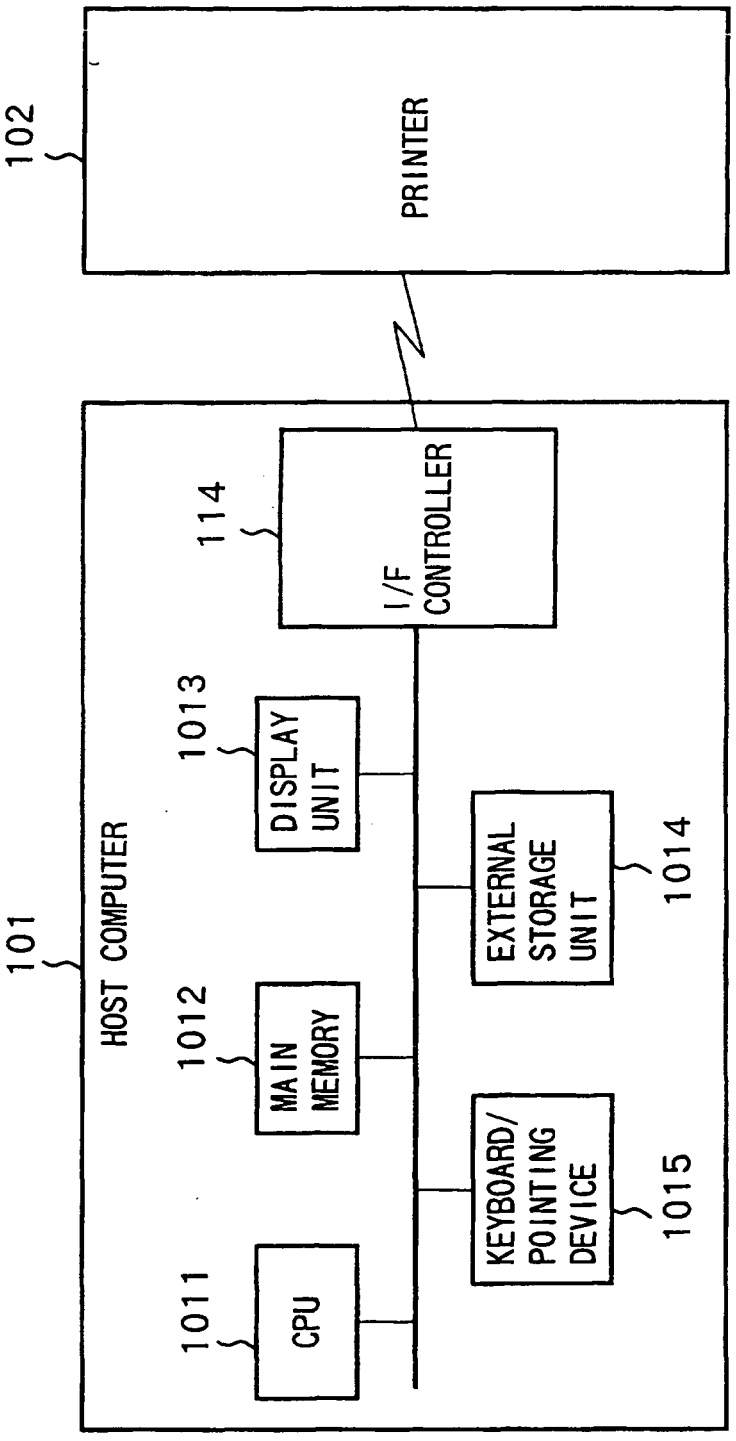
102
PRINTER
101
HOST COMPUTER
114
I/F CONTROLLER
1013
DISPLAY UNIT
1012
MAIN MEMORY
1011
CPU
EXTERNAL STORAGE UNIT
1014
KEYBOARD/ POINTING DEVICE
1015

FIG.8

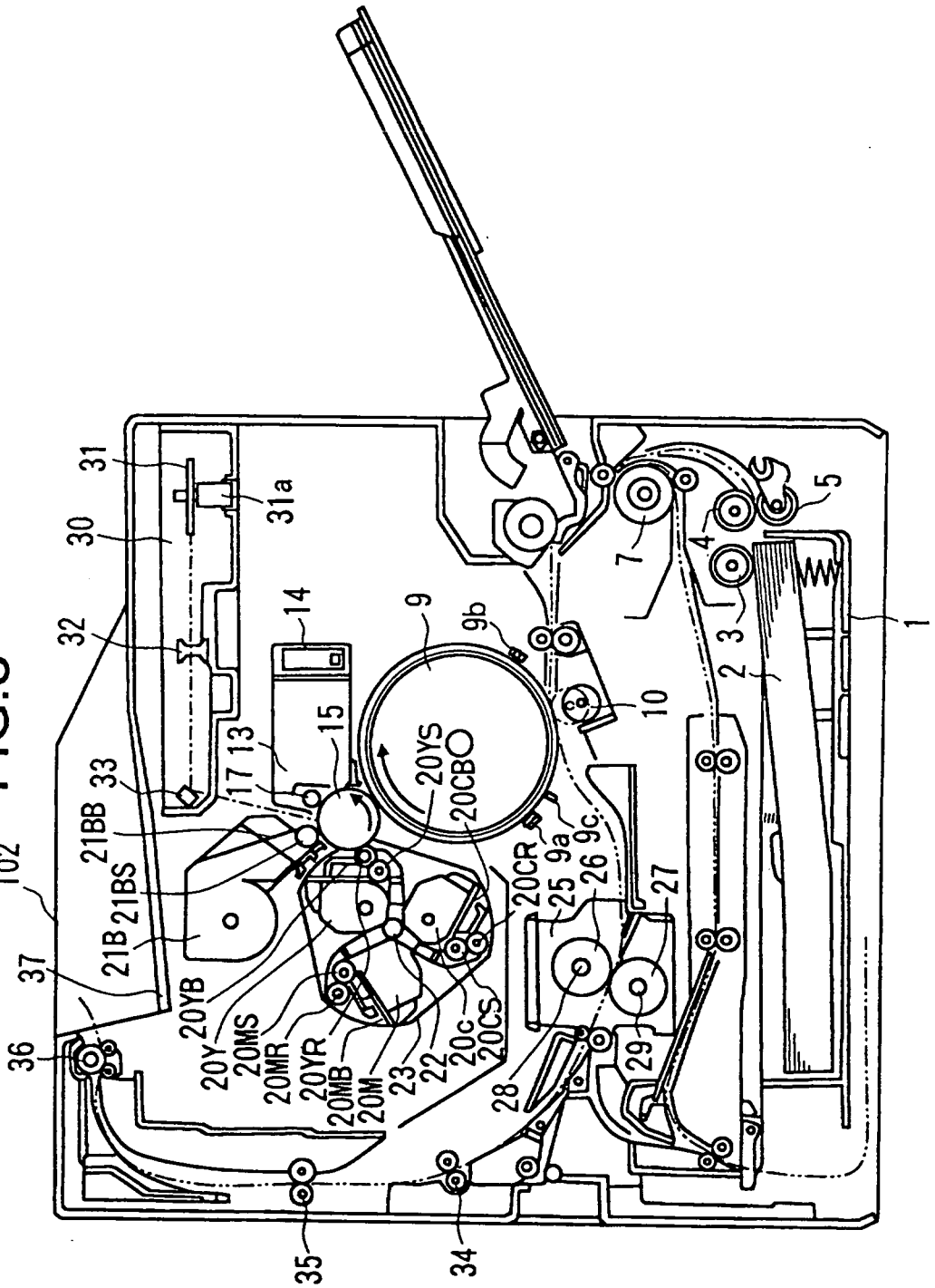
31
31a
30
32
14
9
9b
7
4
5
1
2
3
10
15
13
17
33
21BB
21BS
21B
102
37
36
20YS
20CB
20CR
9a
9c
25
26
27
20Y
20YB
20MS
20MR
20YR
20MB
20M
23
22
20c
20CS
28
29
35
34

FIG.9

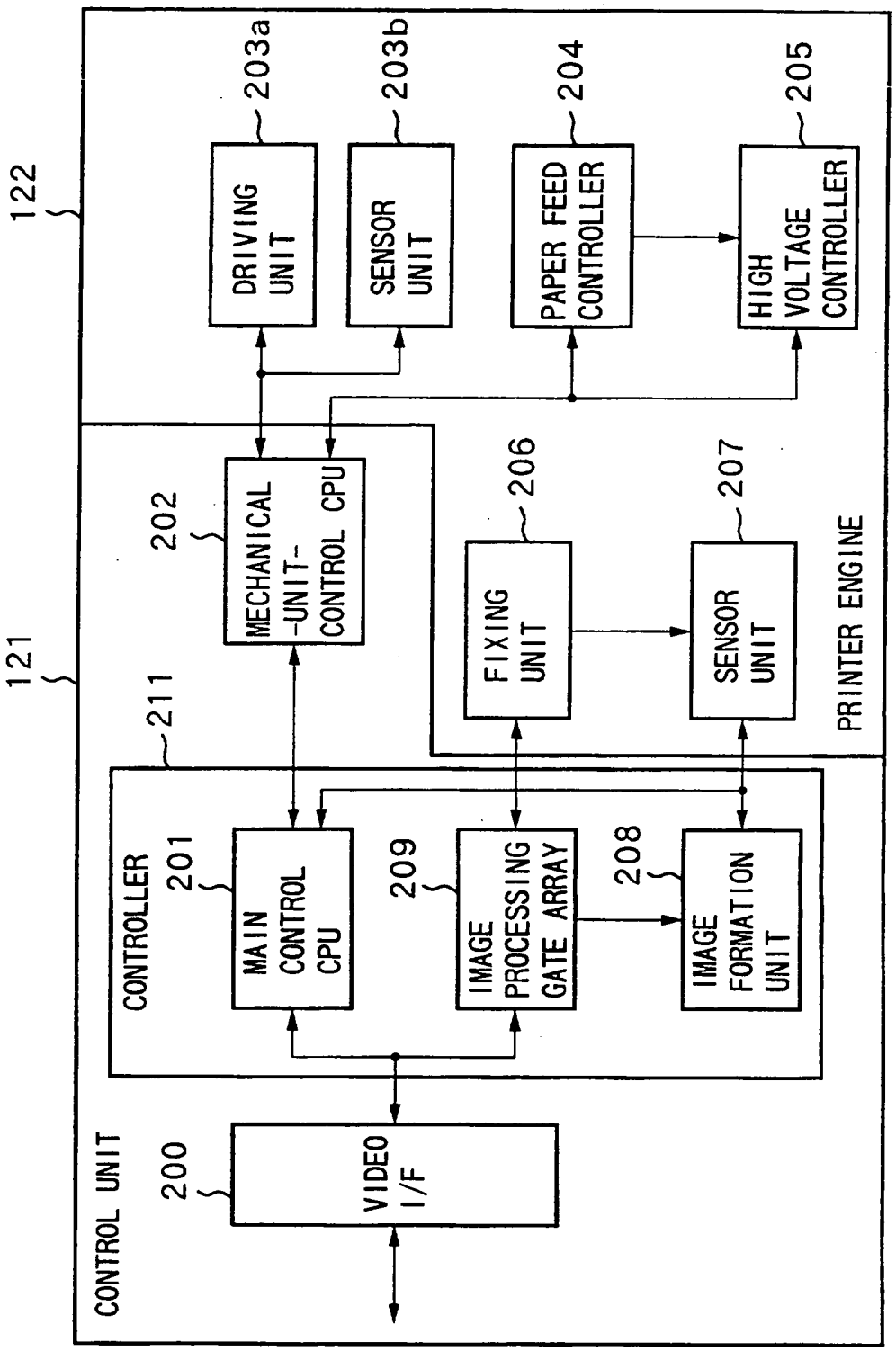
122
203a
DRIVING UNIT
203b
SENSOR UNIT
204
PAPER FEED CONTROLLER
205
HIGH VOLTAGE CONTROLLER
121
202
MECHANICAL -UNIT- CONTROL CPU
206
FIXING UNIT
207
SENSOR UNIT
PRINTER ENGINE
211
CONTROLLER
201
MAIN CONTROL CPU
209
IMAGE PROCESSING GATE ARRAY
208
IMAGE FORMATION UNIT
CONTROL UNIT
200
VIDEO I/F

FIG.10

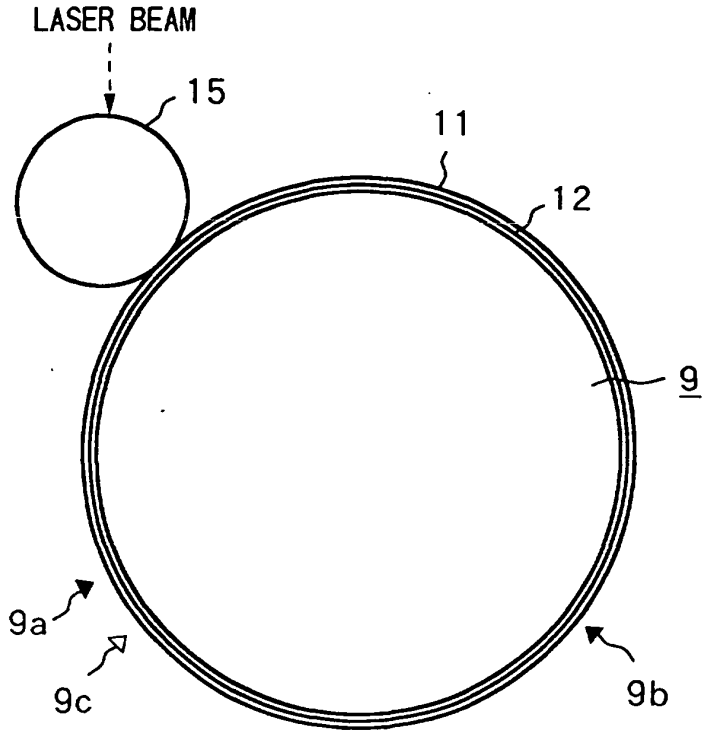
LASER BEAM
15
11
12
9
9a
9c
9b

FIG.11

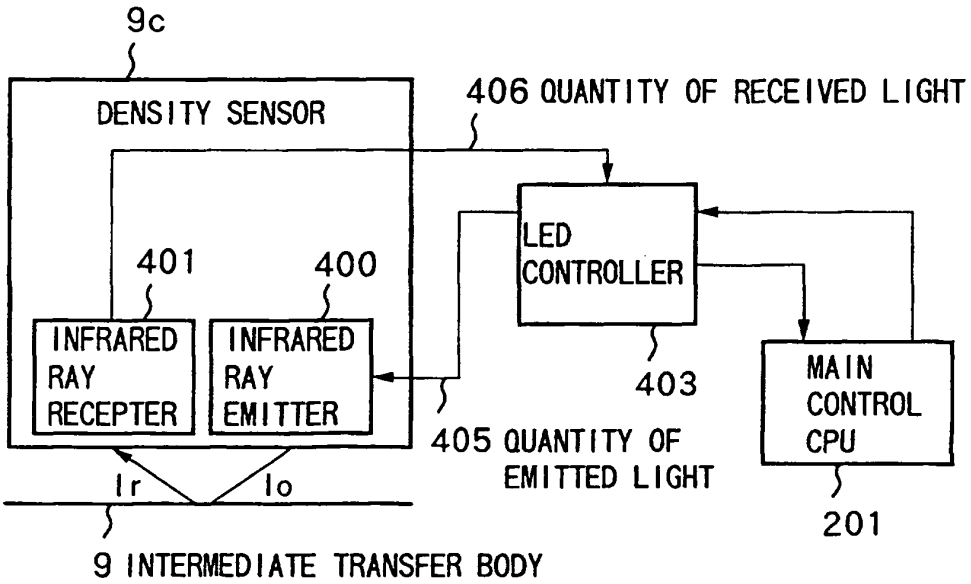
9c
DENSITY SENSOR
406 QUANTITY OF RECEIVED LIGHT
LED CONTROLLER
401
400
INFRARED RAY RECEPTER
INFRARED RAY EMITTER
403
MAIN CONTROL CPU
405 QUANTITY OF EMITTED LIGHT
Ir
Io
201
9 INTERMEDIATE TRANSFER BODY

FIG.12

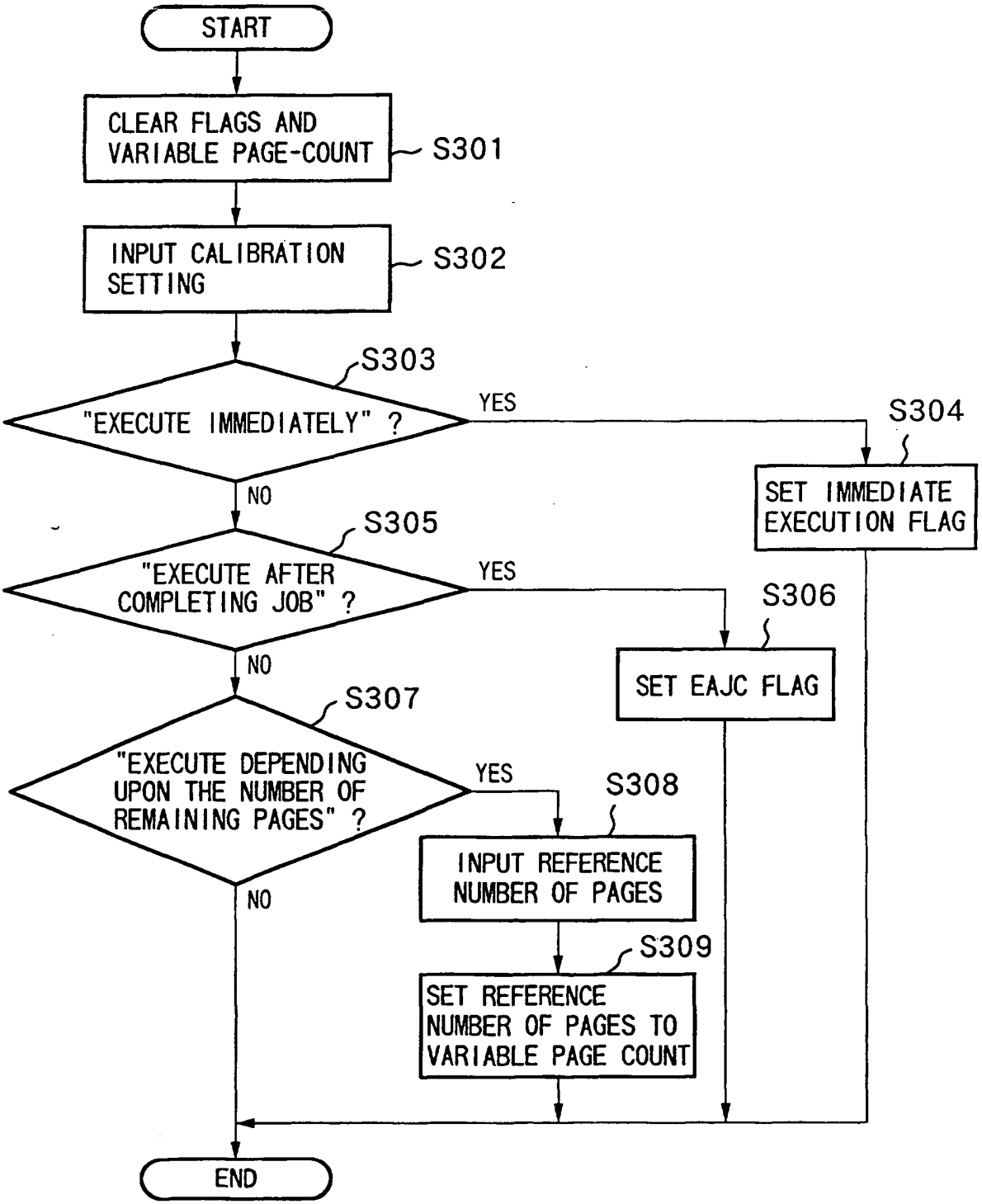
START
CLEAR FLAGS AND VARIABLE PAGE-COUNT
S301
INPUT CALIBRATION SETTING
S302
S303
"EXECUTE IMMEDIATELY" ?
YES
S304
SET IMMEDIATE EXECUTION FLAG
NO
S305
"EXECUTE AFTER COMPLETING JOB" ?
YES
S306
SET EAJC FLAG
NO
S307
"EXECUTE DEPENDING UPON THE NUMBER OF REMAINING PAGES" ?
YES
S308
INPUT REFERENCE NUMBER OF PAGES
S309
SET REFERENCE NUMBER OF PAGES TO VARIABLE PAGE COUNT
NO
END

FIG.13

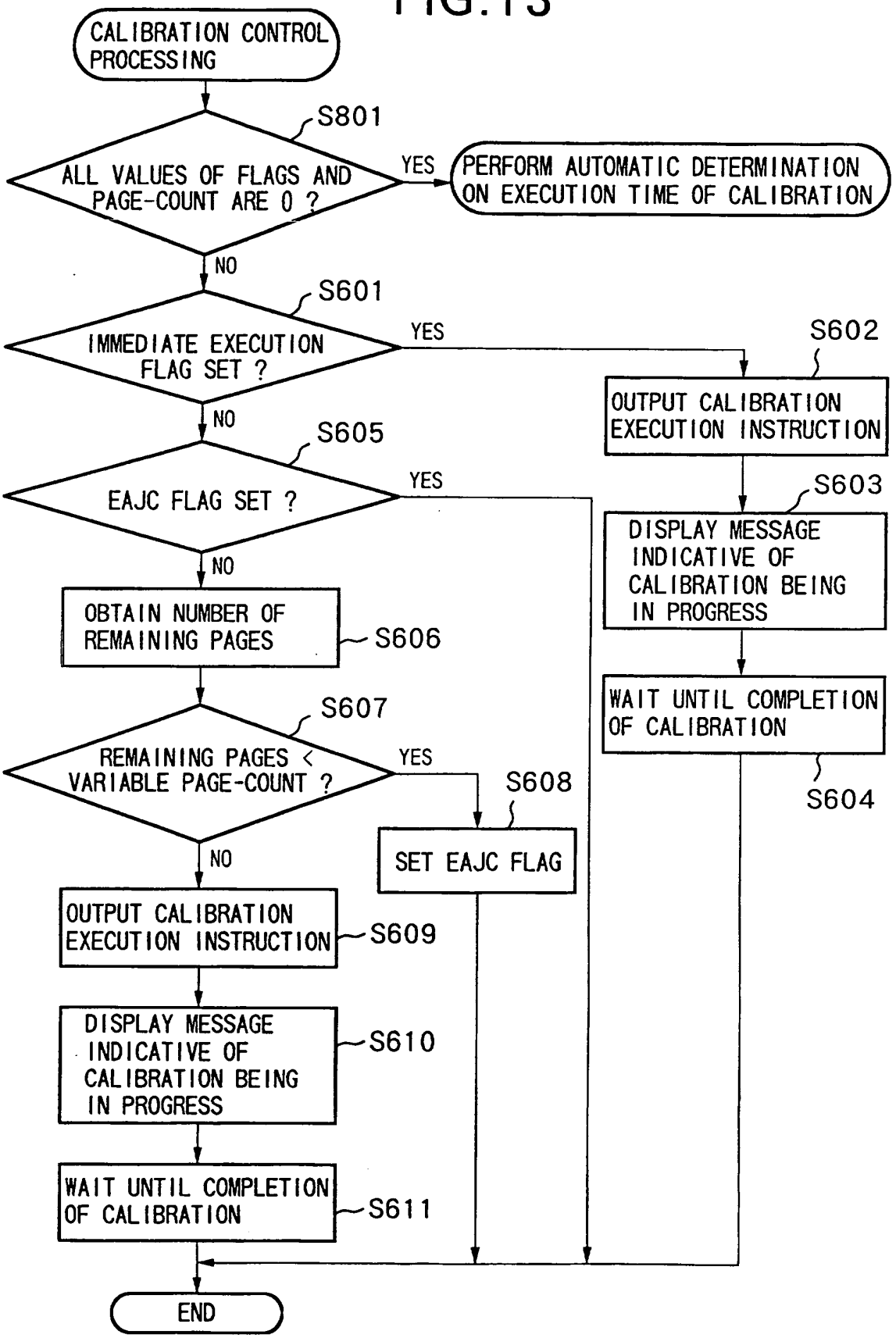
CALIBRATION CONTROL PROCESSING
S801
ALL VALUES OF FLAGS AND PAGE-COUNT ARE 0 ?
YES
PERFORM AUTOMATIC DETERMINATION ON EXECUTION TIME OF CALIBRATION
NO
S601
IMMEDIATE EXECUTION FLAG SET ?
YES
S602
OUTPUT CALIBRATION EXECUTION INSTRUCTION
NO
S605
EAJC FLAG SET ?
YES
S603
DISPLAY MESSAGE INDICATIVE OF CALIBRATION BEING IN PROGRESS
NO
OBTAIN NUMBER OF REMAINING PAGES
S606
WAIT UNTIL COMPLETION OF CALIBRATION
S604
S607
REMAINING PAGES < VARIABLE PAGE-COUNT ?
YES
S608
SET EAJC FLAG
NO
OUTPUT CALIBRATION EXECUTION INSTRUCTION
S609
DISPLAY MESSAGE INDICATIVE OF CALIBRATION BEING IN PROGRESS
S610
WAIT UNTIL COMPLETION OF CALIBRATION
S611
END

FIG.14

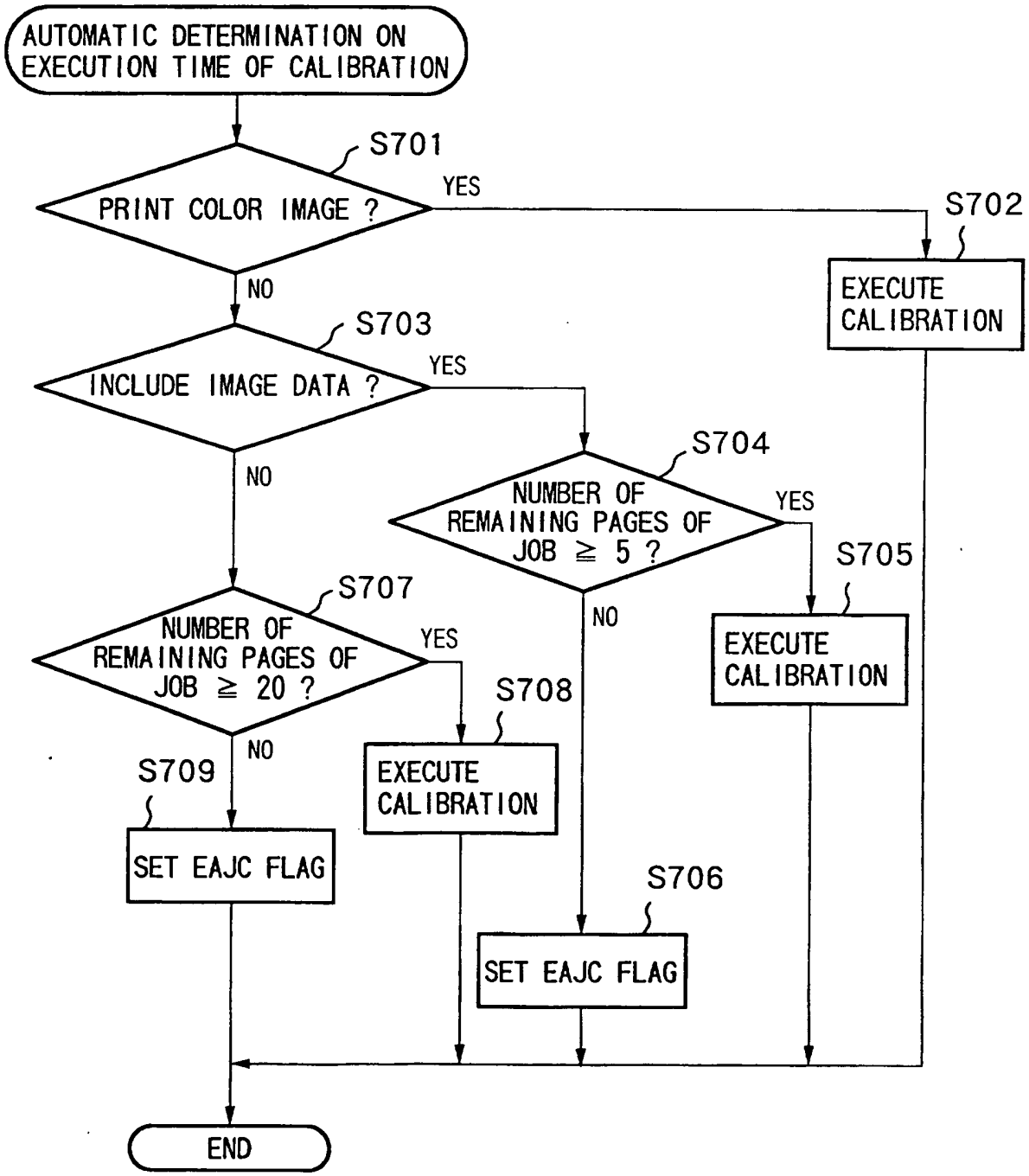
AUTOMATIC DETERMINATION ON EXECUTION TIME OF CALIBRATION
S701
PRINT COLOR IMAGE ?
YES
S702
EXECUTE CALIBRATION
NO
S703
INCLUDE IMAGE DATA ?
YES
NO
S704
NUMBER OF REMAINING PAGES OF JOB ≧ 5 ?
YES
S705
EXECUTE CALIBRATION
NO
S707
NUMBER OF REMAINING PAGES OF JOB ≧ 20 ?
YES
S708
EXECUTE CALIBRATION
NO
S709
SET EAJC FLAG
S706
SET EAJC FLAG
END

FIG.15

