110. FURNACES,

104

Dec. 22, 1931. H. VAN DEVENTER 1,837,635

POWDERED COAL BURNER

Filed Jan. 4, 1928

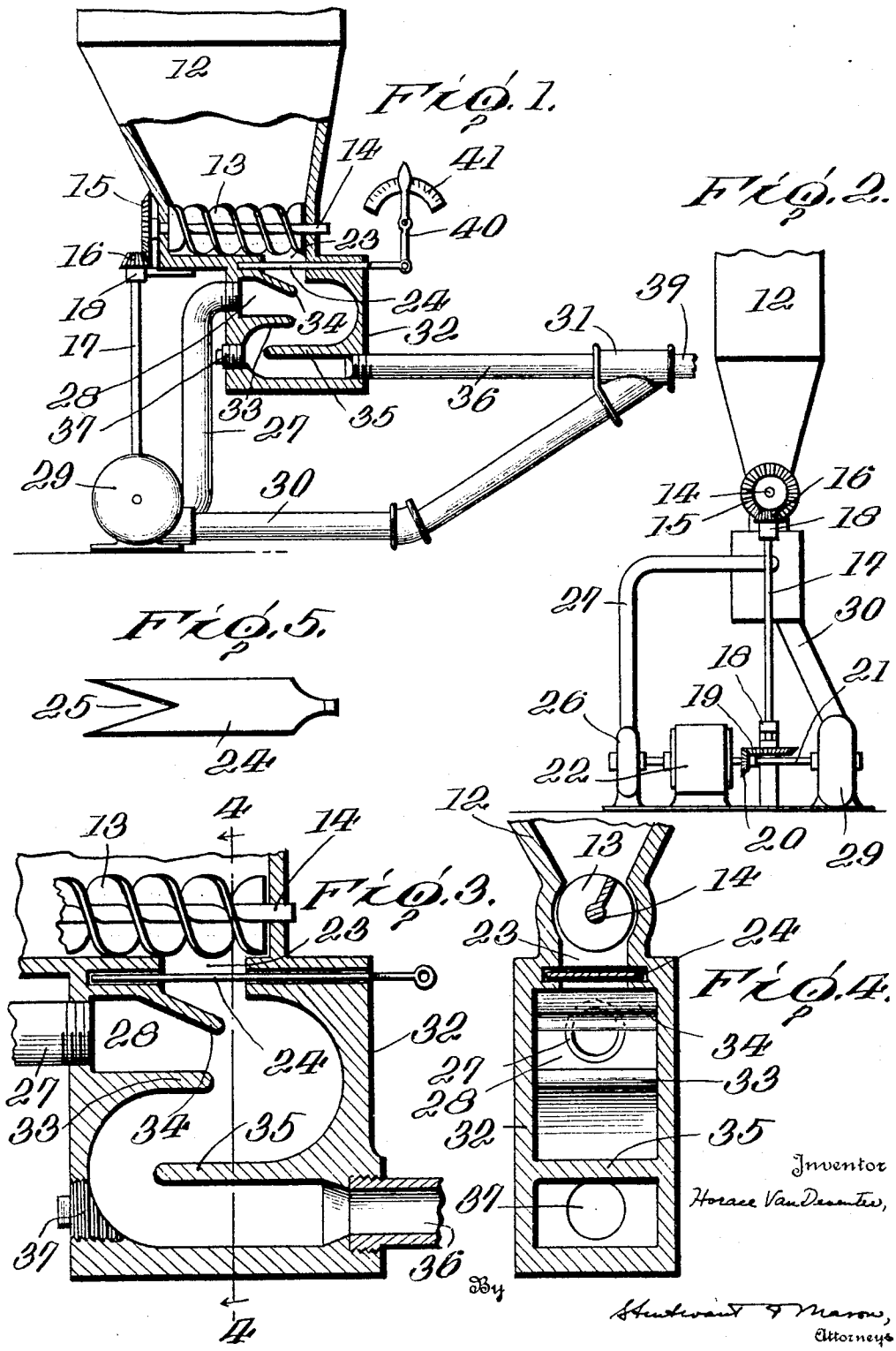

Inventor
Horace Van Deventer,

By Stuttevant & Mason,
Attorneys.

110. FURNACES,
104

Patented Dec. 22, 1931 1,837,635

UNITED STATES PATENT OFFICE

HORACE VAN DEVENTER, OF KNOXVILLE, TENNESSEE

POWDERED COAL BURNER

Original application filed February 1, 1927, Serial No. 165,165. Divided and this application filed January 4, 1928. Serial No. 244,508.

This invention relates to improvements in devices for mixing powdered fuels such as coal with air to produce a fuel mixture for combustion.

This application is a division of my co-pending application Serial No. 165,165, filed Feb. 1, 1927.

It has heretofore been proposed to employ powdered coal and other powdered fuels for the production of heat; and the present invention relates to a device whereby such powdered fuels may be thoroughly and intimately mixed with air or similar gas for combustion, whereby the mixture may be employed for various heating and power purposes, in furnaces, fire boxes, stoves, cutting torches, forges, etc., for stationary or portable work in steam boilers, locomotive engines, tractors, etc., and even for employment within the combustion chamber of internal combustion engines and turbines.

In particular, the invention proposes improved means for preparing a suspension of finely powdered fuel in a current of air whereby a quasi-gaseous state is attained in which the mixture is readily and easily ignited and burns like an entirely gaseous mixture. A particular feature of this invention is the suspending of the powdered fuel primarily in a portion of the air for combustion, and thereafter mixing this primary suspension with further air to produce the ultimate fuel mixture.

With these and other objects in view, as will appear in the course of the following specification and claim, I have represented my invention in one illustrative form on the accompanying drawings, in which:

Figure 1 is a side view in partial section of a fuel mixing device according to the present invention.

Fig. 2 is an end elevation of the same.

Fig. 3 is a section corresponding to that of Fig. 1, but on an enlarged scale.

Fig. 4 is a vertical section on line 4—4 of Fig. 3.

Fig. 5 is a plan view of the valve employed to regulate the delivery of the powdered fuel.

On these drawings, the hopper 12 to receive the powdered fuel, for example, finely powdered coal, is provided with a reduced lower end having therein an agitating and forwarding device, such as the screw 13, which is carried by a shaft 14 journaled at its ends in the hopper walls and projecting therefrom at one end to receive the bevel gear 15 which is in mesh with a similar bevel gear 16 mounted on a vertical shaft 17, which in turn is supported by the journal brackets 18. This shaft 17 carries at its lower end a bevel gear 19 which meshes with a bevel gear 20 on the shaft 21 driven by the motor 22. It is obvious that as the motor rotates, the several gears and shafts are driven thereby, and the endless screw 13 is caused to revolve in such a manner as to constantly urge the coal dust at the bottom of the container toward the outlet aperture 23 of the same. It will be noted that the bevel gear pairs 20, 19 and 16, 15 constitute a speed reduction train between the motor and the endless screw 13.

The lower end of the hopper 12 is provided with the aforesaid outlet aperture 23 which is closable by a valve plate 24 which has a V-shaped opening 25 therein to more or less close the aperture 23, according to the desire of the operator. The coal dust within the hopper 12 is constantly agitated by the screw 13, and passes in a regulated stream through the aperture 23, as determined by the valve plate 24. This plate 24 slides in a pocket provided at the bottom of the hopper for the designated purpose.

Likewise mounted for drive by the shaft 21 of the motor 22 are the high pressure and low pressure fans or compressors for delivering air for the combustion of the fuel powder. The low pressure fan 26 is connected by an eduction pipe 27 to an ante-chamber 28 of the fuel mixing block, which is formed integrally with or connected to the lower end of the hopper 12 and about the aperture 23 thereof. The high pressure fan 29 is connected by an eduction pipe 30 to a Y-connection 31 on the outlet line 36 for the fuel mixture from the fuel mixing block, as will be more fully set forth hereinafter. The fuel mixing block 32 is preferably formed inte-

grally with the bottom of the hopper 12, and at all events has the clear passage 23 in communication therewith, as governed by the valve plate 24. The ante-chamber 28 for the reception of the low pressure air from the eduction pipe 27 is partially shut off from the general mixing chamber by a substantially horizontal inwardly directed flange or baffle 33, and a downwardly inclined lip 34 which serves to form a trickle plate or funnel for the fuel dust entering through the aperture 23. A horizontally and inwardly projecting flange 35 at the opposite side of the mixing block serves as a baffle to cause the mixture of air and fuel dust to pass in a tortuous path through the block, from the point of initial contact at the lower edge of the lip 34 around the baffles 33, 35, and to the opening to the outlet pipe 36. A plug 37 is preferably provided in the wall of the mixing block 32 in line with the outlet pipe 36, and at the bottom of the mixing chamber, so that it is possible to remove accumulations of material which may occur within the mixing block, if desired. It will be understood, however, that the material is normally swept forward through the mixing block and into the outlet pipe 36.

The outlet pipe 36 passes to the Y-connection 31 and thence by the fuel pipe 39 to the point of use. It will be understood that the pipe 39 is of sufficient length to permit a thorough mingling of the mixture and air coming from the pipes 30 and 36.

The outer end of the valve plate 24 is connected to any suitable adjusting and fixing means, so that its position may be varied and retained, such as the pivoted lever 40 which cooperates with a sector 41.

The method of operation of this fuel mixing device is as follows: a supply of powdered fuel, such as coal, is placed in the hopper 12, and the electric motor 22 is set into operation. The motor drives the fans 26 and 29, whereby currents of air are caused to pass through the respective pipes 27 and 30, and to enter the pipe 39. As the motor turns, the endless screw 13 is caused to revolve to prevent packing or stacking of the powdered fuel in the hopper 12. The operator then opens the slide valve plate 24 to a greater or lesser extent to cause the coal to enter the mixing chamber in the block 32, and as it trickles down past the lower edge of the lip 34, it is caught and mingled intimately with the air under low pressure which is entering through the ante-chamber 28. This mixture of air and pulverized fuel suspended in a cloudy condition therein being a quasi-gas, passes into the outlet pipe 36 and the Y-union 31. At the same time the current of air under high pressure in the pipe 30 flows through this union, and by its ejector action facilitates the movement of the fuel mixture in the pipe 36, and becomes mixed therewith in the union 31 and the outlet pipe 39 therefrom, and finally will issue at the free end of this pipe as a blast of uniformly mixed air and fuel. This blast may be employed similarly to a gas and air mixture, and ignited in the usual manner.

It is found that the mixing of the pulverized fuel primarily with air moving at low velocity and under low pressure, and thereafter mixing this primary mixture with further air under high pressure, results in the suspension or flotation of the finely powdered fuel in the air to such an extent that the mixture resembles a gas in its combustibility.

In this way and manner, the powdered fuel maintains its finely divided form and remains cold while in the hopper, and by means of the agitator in this hopper, all packing or jamming of the fuel is prevented, so that a regulated and uniform stream passes through the valve structure, and trickles down over the lip or apron 34 and passes in a uniform and thin sheet to the blast of incoming air. Furthermore, the low pressure air passing through the ante-chamber 28 is given momentarily a greater speed by the restriction caused by this downwardly extending lip, while the tortuous passage through the mixing block itself is of larger section so that the mixture occurs by the successive reversal of direction and inversion of the air current within the mixing block. As this mixture passes to the Y-connection, it is moved with a relatively low speed and with a relatively insufficient quantity of air for combustion. The air under high pressure and at high speed is then introduced into this semi-completed mixture, whereby the speed is accelerated beyond the velocity at the development of the quasi-gas, so that the fuel mixture may be burnt at its passage from an orifice, even though this orifice be of large size, without danger of flaming back. Likewise, this air at high speed and pressure is incorporated and mixed thoroughly with the semi-completed mixture to form a mixture of predetermined composition characteristics, so that a complete combustion of the powdered fuel shall occur in the flame. The mixture is therefore accomplished primarily by air at low pressure and speed, and completed by air at high pressure and speed.

It is obvious that the invention is not limited to the specific form of apparatus shown, but that it may be modified within the scope of the appended claim. In particular it may be pointed out that a similar primary and final mixture may be accomplished in producing a quasi-gaseous mixture of air and pulverized fuel for an internal combustion engine, by employing the suction of the engine itself to draw the air through the pipes 30 and 39.

110. FURNACES,
104

I claim:

In a powdered fuel burning system, a hopper for the powdered fuel having an outlet at its bottom, an agitator in said hopper, a fuel controlling valve at the outlet from said hopper, a casing in communication with said outlet comprising a mixing chamber located at the outlet side of said valve and including means for producing successive abrupt reversals of the direction of flow of an air current, means for furnishing air under low pressure, a primary air conduit from said low pressure air means leading into said chamber adjacent the fuel inlet thereto whereby a primary mixture of the fuel with low pressure air may be accomplished in said chamber, a burner, a fuel mixture conduit leading from said chamber to said burner, means for furnishing air under high pressure, and a secondary air conduit from said high pressure means leading to said burner conduit whereby high pressure secondary air is added to said mixture and incorporated therewith in said fuel mixture conduit.

In testimony whereof, I affix my signature.

HORACE VAN DEVENTER.