Dec. 22, 1942. C. O. PREST 2,306,082

METHOD FOR LINE OR DESIGN REPRODUCTION BY ELECTROLYSIS

Filed April 27, 1940

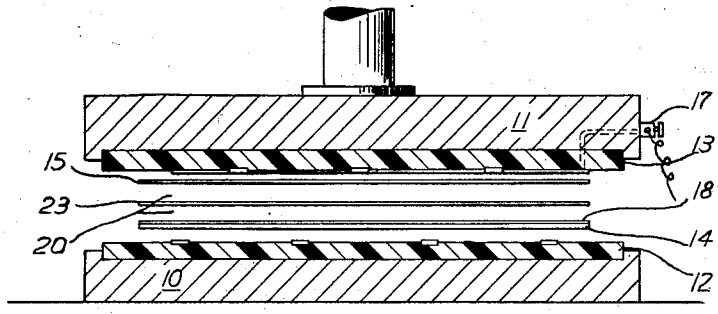

FIG-I

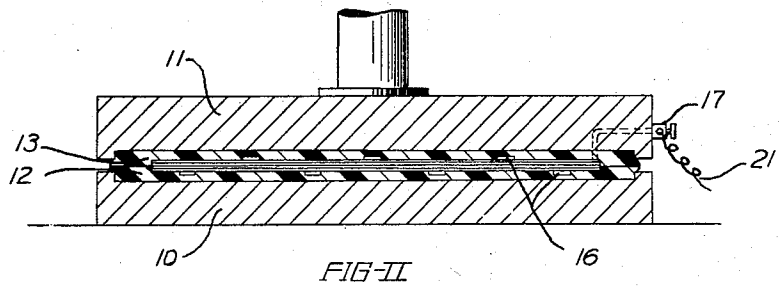

FIG-II

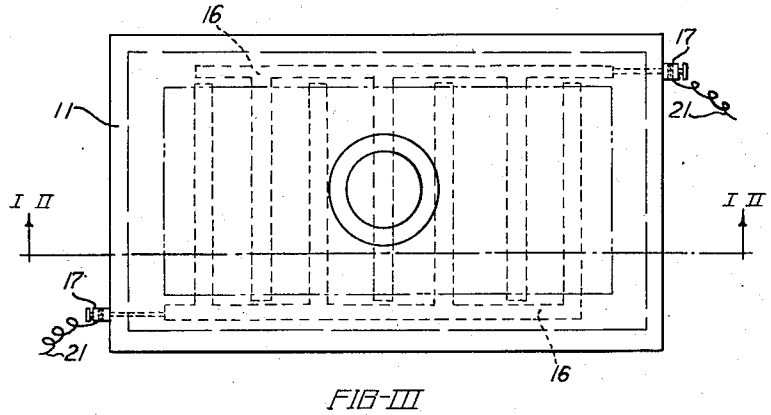

FIG-III

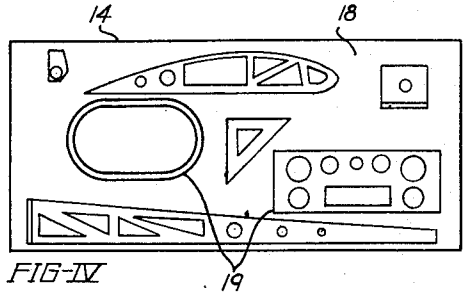

FIG-IV

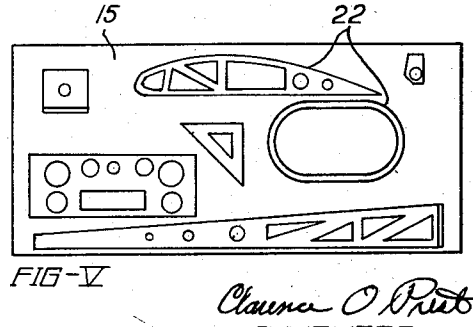

FIG-V

Clarence O Prest
INVENTOR

Bacon & Thomas

Patented Dec. 22, 1942

2,306,082

UNITED STATES PATENT OFFICE

2,306,082

METHOD FOR LINE OR DESIGN REPRODUCTION BY ELECTROLYSIS

Clarence O. Prest, Burbank, Calif.

Application April 27, 1940, Serial No. 332,077

8 Claims. (Cl. 204—18)

My invention relates to a method and apparatus for reproducing prints or designs from one surface to another. It is particularly advantageous in producing reproductions of drawings, designs, templates, dies and the like, in connection with the aircraft or ship building industries wherein large, substantially flat, sheets of metal are used.

There is a great duplication of work in many industries because of the lack of a simple, cheap and accurate method of reproduction. For instance, in the aircraft industry, the design of a particular part of the aircraft is made by the engineering department who, in turn, transmit such design to the factory for production. The factory must necessarily redraft the design usually on metal plates in order to form the necessary templates, dies and the like to produce the design on a production basis. Furthermore, such original design may be redrafted a great number of times prior to its actual construction. This method of reproduction is very expensive both from the standpoint of labor and time and also extremely inaccurate due to the possibility of human errors.

The principal object of the invention is to provide a novel and improved means of reproduction with a minimum of time and labor without sacrificing accuracy. The invention relates primarily to a method or process and apparatus for making such reproductions by means of electro-deposition of material from one surface to another.

It is a further object of the invention to provide a simple and novel press in which the reproduction is made.

Further objects and advantages of the invention will be made evident throughout the following part of the specification.

Figure I is an elevation, sectional view, showing a simple and preferred form of apparatus wherein the invention may be practiced, such apparatus and the elements constituting this invention being shown in a clearly defined manner by exaggerating the drawing vertically.

Figure II is similar to Figure I except that the press is in operation, resulting in the squeezing of the various elements in close contact with one another prior to and during the reproduction process.

Figure III is a plan view of the apparatus shown in Figure I and Figure II.

Figure IV is a view of a design or print laid out on the original surface.

Figure V is the result of the method described in this invention showing the reproduction which has been printed from the original surface of Figure IV in conjunction with the apparatus of Figures I, II and III.

In the apparatus which I have shown in Figures I and II, I employ two cooperating parts 10 and 11 which are adapted to be moved together under pressure, if necessary, and apart to accomplish results which will be hereinafter described. The member 10 may be considered a support or table and the member 11 may be termed a head which moves relative to the table 10. Both the table 10 and the head 11 may be lined with a fluid-like material 12 and 13, such as rubber, linoleum, composite board, or the like. Although it is not necessary that pads 12 and 13 be definitely attached to the table 10 and head 11, it is to be understood that the elements must have a relative association substantially that which is shown. The original surface 14 upon which the design is made and the surface 15 on which the design is to be reproduced are inserted between the pads 12 and 13. An electrical connection is made to both surfaces in such a manner that a current is passed between such surfaces. One plate then becomes the cathode and the other the anode. In order to produce as even a current distribution over the surfaces 14 and 15 as is possible, and in order to simplify the electrical problem, I have found it advisable to install network 16, preferably constructed of a high conductivity material such as terneplate or copper, and to lead the wiring to outside posts 17 to connect to the electrical source, thus eliminating the necessity of making individual connections for each set of surfaces. The network is preferably staggered in order to eliminate any possibility of short-circuit in case small surfaces are used. Further, it has been found advantageous, and therefore preferable, to install the posts 17 on opposite sides of the apparatus in order to insure an even distribution of current.

Figure III shows a plan view of the table with the various elements necessary to the invention outlined thereon.

Figure IV shows the original surface 14, in this case being a flat metal plate which has been previously coated, painted or sprayed with an insulating paint or otherwise provided with an insulating coating such as an oxide coating formed in situ thereon and forming an insulating surface 18, thus completely isolating the surface 15 from any contact with surface 14. A design, layout or print 19 which is desired to be reproduced is then scratched, scribed or scored through the insulating surface 18 and into the original metal plate 14. The insulation 18 is thus removed along the line of the scratches forming the design 19.

It is then wet with a solution or electrolyte 20, preferably ferrous or manganese chloride, and squeezed by means of the apparatus into close contact with an uninsulated plate 15 upon which the reproduction or design is to be made. An electrical current is then applied through the conductors 21 from a suitable source of current (not shown) to the elements 14 and 15, resulting in the formation of the reproduction 22.

While aqueous solutions of the ferrous or manganese chlorides mentioned above comprise the preferrred marking agents, many other materials may be employed. For example, a solution of a salt of substantially any metal which can be deposited electrically, such as copper, zinc, tin, etc., will deposit a film of metal when the sheet to be marked is made the cathode. It is advantageous but not essential for the cation of the salt to be of a differently colored metal than the sheet to be marked. Also, substantially any acid or salt, even of a metal which does not electrolytically deposit, can be employed to carry metal from a marking plate to the plate to be marked. By making the plate to be marked the anode, similar solutions can be employed to electrolytically etch this plate, or, by using an alkaline solution, the plate to be marked can be subjected to anodic oxidation. In the latter case, alternating current can be employed. Thus, substantially any conducting solution is effective as a marking agent to form a deposit upon or change the appearance of the plate to be marked at portions corresponding to the conducting portions of the master plate so as to transfer the design.

Figure V shows the reproduction 22 of the design 19 which has been formed by means of the invention described herein. It will be noted that by means of an electrolytic action, there has been a visual alteration of the surface of the reproduction plate 15 by etching, oxidation, deposition of metal from the electrolytic solution or transfer of the material from the original surface 14 to the reproduction plate 15.

I have found by my experiments and research that it is possible to insert between the original surface 14, and the reproduction surface 15, a sheet of flexible material 23, such as paper or the like, without affecting the process. In this manner a print is made on the flexible material 23 as well as on the reproduction plate 15. It is, therefore, possible to not only make a reproduction on the metal surface 15 but it is possible to obtain prints on flexible material such as paper and the like at the same time and during the same operation. This is advantageous in many respects, notably that it produces a record on paper which can be checked prior to further processing the reproduction plate 15. This is shown in Figure I.

I have also found by experiment and research that by means of certain solutions or electrolytic fluids in association with the apparatus and invention herein described, I can produce a print, similar to the common blue-print, in a simple, cheap and accurate manner. This is accomplished by dipping the paper in a primary solution, preferably of iron and ammonium citrates, due to the cheapness of these substances, or a similar fluid, subjecting it to the electrolytic process of this invention, and then developing in a solution of potassium ferric cyanide. Transfer of material is not necessary in this case. Upon completion, the paper is taken out of the press, washed and dried: This process enables one to print directly from the surface or metal plate. Furthermore, it enables one to obtain a plurality of prints in one operation, if desired.

The process which I have described herein may be adapted to use with a lofting board. A lofting board is used by many industries in order to sketch up contours, water-lines, etc. in relatively large scale in order to further their manufacturing process. Many times the templates and jigs are made from such lofting work. This invention can be applied to such work by merely having a portable apparatus which can be taken to the lofting board and prints made directly from the board, or, if preferable, the lofting board can be made in sections, the sections taken up and transferred to the reproduction apparatus to be adapted to the process herein described.

It will be apparent that the apparatus and method of the present invention is not limited to the marking or printing on flat surfaces but that a properly formed master marking element can be caused to register with curved or irregular surfaces on the article to be marked and be pressed thereagainst by any suitable means. Also, a marking means can be formed of relatively thin sheet metal and be caused to conform to the surface of an irregularly shaped article by a press of the type illustrated herein.

It is to be understood that the description and illustration disclosed herein is merely one form which my invention may take and that the scope and effect of such invention is to be limited only by the appended claims.

I claim:

1. The method of reproducing a design upon an electrically conducting member, which comprises, forming a design upon the surface of a first member of solid electrically conducting material said design consisting of an adherent film of insulating material upon portions of the area of said surface of said member and uninsulated areas of the surface of the solid conducting material of said member free from said insulating film exposed through said film to form said design, pressing the insulated portions of said surface into close contact with the uninsulated surface of a second electrically conducting member, wetting at least one of said surfaces of said member with an electrolyte prior to contacting the same thereby entrapping the electrolyte between the surface of said second member and the uninsulated portions of the surface of said first member during said pressing, passing an electric current from one of said members to the other member through said entrapped electrolyte to effect an electrochemical reaction producing visible marks upon said second member corresponding with the uninsulated portions of the surface of said first member to reproduce said design upon said second member.

2. The method of reproducing a design upon an electrically conducting member, which comprises, forming a film of insulating material upon a surface of a first member of solid electrically conducting material, forming a design upon said surface by removing portions of said insulating film to expose areas of the surface of said solid electrically conducting material of said member through said film to form said design, pressing the insulated portions of said surface into close contact with the surface of a second electrically conducting member, wetting at least one of said surfaces of said members with an electrolyte prior to contacting the same thereby entrapping electrolyte between the surface of said second member and the uninsulated portions of the surface

of said first member during said pressing, and passing an electric current from one of said members to the other of said members through said entrapped electrolyte to produce an electrochemical reaction forming visible marks upon said second member corresponding with said uninsulated portions of the surface of said first member to reproduce said design upon said second member.

3. The method of reproducing drawings upon an electrically conducting member, which comprises, forming an adherent film of insulating material upon a surface of a first member of solid electrically conducting material, scribing the lines of said drawing through the thickness of said insulating film to expose areas of the surface of the solid conducting material of said conducting member through said insulating film to form said drawing, pressing the uninsulated surface of a second electrically conducting member into substantially uniform contact with the insulated portions of the surface of said first member, wetting at least one of said surfaces of said members with an electrolyte prior to contacting the same thereby entrapping electrolyte in the scribed lines in said insulating film between the conducting material of said first member and said second member, passing an electric current from one of said members to the other through said entrapped electrolyte to produce an electro-chemical reaction forming visible marks upon said surface of said second member corresponding exactly with said scribed lines of said drawing to reproduce said drawing upon said surface of said second member.

4. A method of reproducing drawings upon metal sheets, which comprises, forming an adhering film of insulating material on a surface of a first metal sheet, scribing lines of said drawing through the thickness of said insulating film to expose areas of the surface of said metal of said sheet through said insulating film to form said drawing, pressing the uninsulated surface of a second metal sheet into substantially uniform contact with the insulating film on said first metal sheet, wetting at least one of said surfaces with an electrolyte prior to contacting the same thereby entrapping electrolyte in said scribed lines of said insulating film during said pressing, and passing an electric current from one of said sheets to the other through said entrapped electrolyte to produce an electrochemical reaction between said electrolyte and the adjacent contacting surface of said second metal sheet to form visible marks thereon corresponding exactly with said scribed lines of said drawing in said insulating film to reproduce said drawing upon said surface of said second sheet.

5. A method of reproducing drawings upon metal sheets, which comprises, applying a film of insulating paint upon a surface of a first metal sheet, allowing said applied insulating paint to dry to form a tenaciously adhering film of insulating material which is relatively thin as compared to the thickness of the metal to which it is applied, scribing the lines of said drawing through the thickness of said insulating film to expose areas of the surface of the metal of said sheet to form said drawing, pressing the uninsulated surface of a second metal sheet into substantially uniform contact with the insulated film of said first metal sheet, wetting the surface of at least one of said sheets with an electrolyte prior to contacting the same thereby entrapping electrolyte in said scribed lines in said insulating film, passing an electric current from one of said sheets to the other through said entrapped electrolyte to produce an electrochemical reaction between said electrolyte and the adjacent contacting surface of said uninsulated metal sheet to form visible marks thereon corresponding exactly with said scribed lines in said insulating film to reproduce said drawing upon said surface of said second sheet.

6. A method according to claim 4 in which the electrolyte comprises a water soluble salt of a metal which can be electrically deposited upon metal.

7. A method according to claim 4 in which the electrolyte comprises a water soluble ferrous salt.

8. A method according to claim 4 in which the electrolyte comprises a water soluble ferrous chloride.

CLARENCE O. PREST.