June 8, 1965 E. C. CARMAN ETAL 3,187,852

TRANSPORTABLE SHELTER

Filed Oct. 31, 1962 2 Sheets-Sheet 1

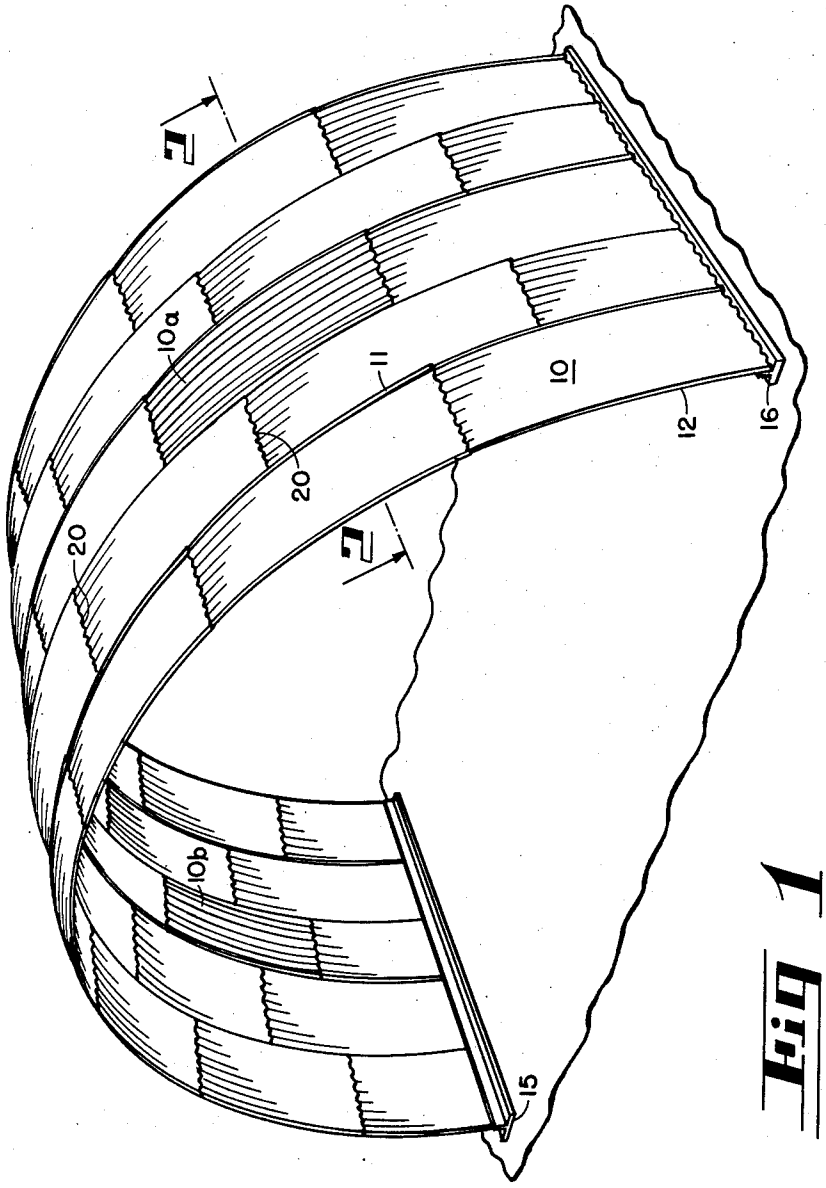

Fig 1

INVENTORS.
EDWARD C. CARMAN
HENRY RITTER
BY Alden D. Redfield
Irwin P Garfinkle
ATTORNEYS.

June 8, 1965 E. C. CARMAN ETAL 3,187,852

TRANSPORTABLE SHELTER

Filed Oct. 31, 1962 2 Sheets-Sheet 2

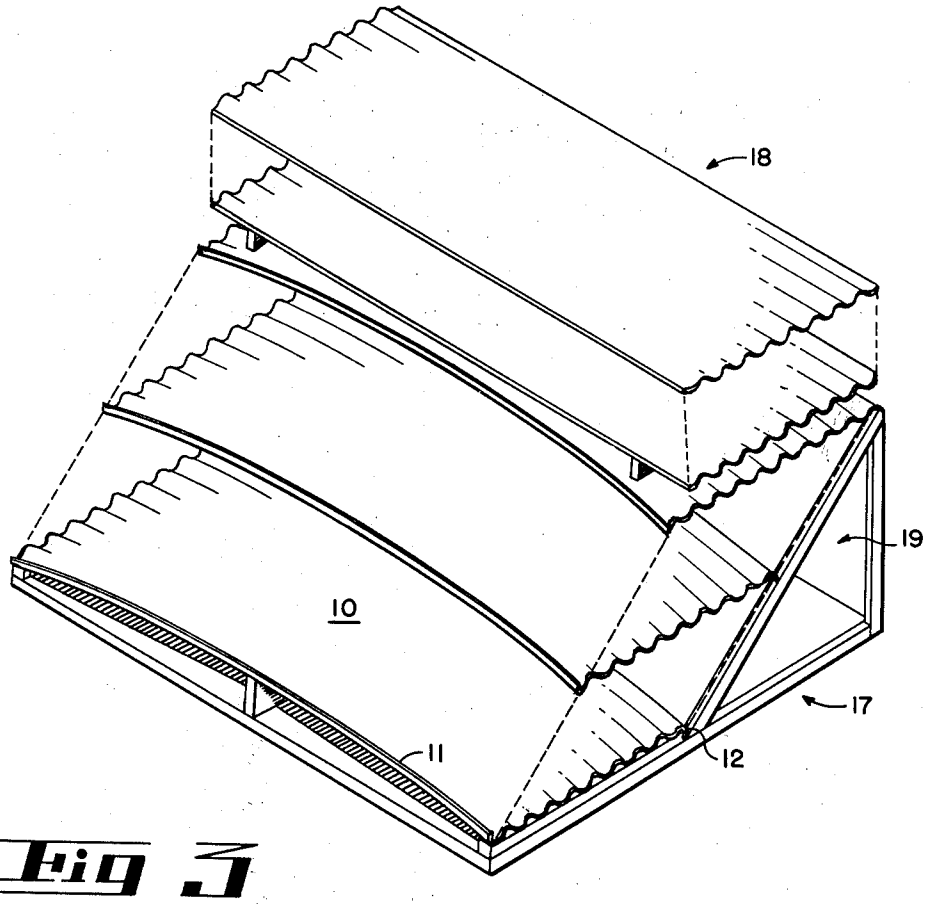

Fig 1

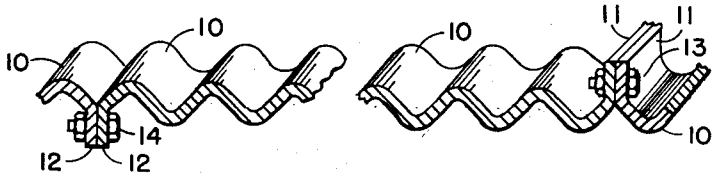

Fig 2

INVENTORS.
EDWARD C. CARMAN
HENRY RITTER
BY Alden D. Redfield
Irwin P. Garfinkle
ATTORNEYS.

United States Patent Office 3,187,852 Patented June 8, 1965

3,187,852

TRANSPORTABLE SHELTER

Edward C. Carman and Henry Ritter, Nashville, Tenn., assignors to Avco Corporation, Nashville, Tenn., a corporation of Delaware

Filed Oct. 31, 1962, Ser. No. 234,466
2 Claims. (Cl. 189—2)

This invention relates to transportable shelters, and more particularly to shelters using construction principles enabling high strength, light weight, minimum bulk for transportation and handling, ease of assembly and disassembly, long service life, and economy of maintenance.

In many applications, for example, in military operations, it is necessary to provide shelters for housing personnel or equipment in remote areas and under conditions where shelters may require rapid assembly, disassembly, and movement from one location to another. The most widely known shelter of the type in use today is the quonset hut. In the construction of the quonset hut, curved, corrugated sheet metal panels are secured to an appropriate frame which may be constructed of steel I-beams and other conventional supporting members. The conventional quonset hut requires a considerable amount of time for assembly, is heavy, and when disassembled, has considerable bulk, making transportation of it relatively difficult.

By means of the present invention, we seek to overcome the disadvantages of conventional prior art shelters by providing a self-supporting shelter construction requiring no supporting beams and which is readily assembled and disassembled, and which is adapted for packaging with minimum bulk for ease in transportation and handling.

In accordance with the present invention, we provide a unique fiber glass reinforced resin panel, which is a self-supporting structural member requiring no other framework or beams to provide the support necessary for large stresses. The unique construction providing this result is a panel provided with lengthwise corrugations, the lengthwise edges of which are provided with oppositely projecting integral flanges. Panels are assembled by butting corresponding flanges and securing them with bolts; that is to say, the flanges projecting in the same direction are butted and secured along their lengths, and this results in a structure having sufficient support to resist bending and twisting. In effect, the oppositely projecting flanges of the panels are the supporting beams for the panel when fabricated into a shelter.

It is, therefore, an object of this invention to provide elongated construction panels having integral flanges projecting from the edges thereof.

Another object of this invention is to provide fabricated construction panels having oppositely projecting integral flanges along the lengths of the edges thereof.

Still another object of this invention is to provide fiber glass-reinforced resin panels having integral oppositely projecting flanges along the edges thereof.

Still another object of this invention is to provide a shelter constructed of elongated, corrugated, fiber glass-reinforced resin panels having integral oppositely projecting flanges, adjacent panels being joined together by fastening means through abutting flanges, said flanges providing the structural support for said panels.

Still another object of this invention is to provide a shelter constructed of corrugated panels having integral oppositely projecting flanges for providing the support for said panels when assembled, the panels being compactly stackable when said shelter is disassembled.

For further objects and for a more complete description of the present invention, reference should now be made

to the following detailed specification and to the accompanying drawings in which:

FIGURE 1 schematically illustrates a shelter constructed in accordance with the principles of the present invention;

FIGURE 2 is a broken-away section of a plurality of panels in assembled condition taken through the line 2—2 in FIGURE 1; and

FIGURE 3 illustrates panels stacked on a shipping pallet.

Referring to the drawings, there is shown a shelter constructed of a plurality of corrugated, fiber glass-reinforced resin panels **10**, each of which is curved to provide an arc of any predetermined convenient angle. Each panel **10** is provided with an integral outer flange **11** which projects outwardly from the panel along the entire length of the edge thereof at an angle of 90 degrees, and an inner flange **12** similarly projecting inwardly from the other edge. In assembling the panels into a shelter, the outer flanges **11** of panels **10** are abutted against the outer flanges **11** of adjacent panels and then secured together by means of nuts and bolts **13** extending through holes in each flange **11**. Similarly, the inner flanges **12** of adjacent panels **10** are abutted together and also bolted by means of bolts **14**. The holes for the bolts **13** and **14** may be provided during the manufacture of the panels or may be drilled at the time of assembly.

In joining the panels in a lengthwise direction to provide the arch, the panels are slightly overlapped to provide lap joints **20**. An end portion of the flanges may be cut away in the manufacture of the panel or during assembly of the shelter to avoid overlapping of the flanges **11** and **12** at the lap joints. Because of the angle of arc of curvature of each panel **10**, an arched structure of any angle up to 360 degrees may be constructed by overlapping and joining a plurality of panels. In the illustrated embodiment the arc is 180 degrees, and ends of the panels at the bottom of the shelter are appropriately secured to spaced T-rails **15** and **16**, which in turn are supported on an appropriate foundation.

The panels **10**, which are constructed of fiber glass-reinforced resin, may be made of any desired color by the addition of appropriate pigments to the resins during the manufacturing process. By this means the panels may be made opaque, translucent, or transparent. For military shelters, opaque camouflage colors may be preferable.

A feature of this invention is that certain of the fiber glass panels may be made transparent or translucent, while the remaining of the panels may be made opaque. By this means the translucent or transparent panels constitute the windows of the shelter thereby eliminating the necessity of special window framing, which is expensive both in materials and in the time consumed for erection of the building. Two such windows **10*a*** and **10*b*** are shown in the assembled shelter illustrated in FIGURE 1.

In disassembled condition, a shelter constructed in accordance with this invention is stackable and easily transportable with minimum bulk. Because of the oppositely projecting flanges **11** and **12**, the panels **10** may be stacked on a pallet **17**, which has a framework suitable for supporting stacked panels at an appropriate angle produced by the offset resulting in the stacking. As seen in FIGURE 3, additional corrugated panels **18**, constructed in a conventional manner, are used without projecting flanges and may be stacked on top of the panels **10**. The panels **18** may be used for closing the front and rear of the shelter by suitable generally conventional construction techniques. The T-rails **15** and **16**, hardware, and tools needed for erecting the shelter may conveniently be stored in the area **19** of the pallet **17**.

In a practical embodiment, the panels may be bolted together with five and one-half inch diameter bolts

through each pair of flanges and four bolts at each lap joint 20 to provide a rigid, windproof structure. Preferably, structural mastic tape may be applied during the erection of the shelter between the flanges and the lap joints to assure a moisture-proof seal.

In starting erection of the shelter, the panels may be assembled in staggered rows along the length of the shelter. A crew working on the interior from the ground up would bolt the interior flanges 12 together and so raise the shelter as the successive rows of panels are added. Another crew working on the exterior of the shelter would bolt the exterior flanges 11 as the successive panels are added along the length of the shelter. The lap joints would be bolted simultaneously by the interior and exterior crews. This method of assembly enables the interior and exterior crews to assemble all of the panels at almost ground level. Blackout curtains may be installed inside the shelter under each of the transparent or translucent panels 10*a* and 10*b* in the event the shelter is used for military operations.

An alternate method of assembly is to assemble two panel widths of an arch on the ground and then raise into position. A crew on scaffolding inside the arch would then bolt the next arch of two panel widths on the inner flanges. Panels in alternate arches are, of course, arranged in staggered relationship so as to provide the necessary structural rigidity.

If insulation is required, it is provided for the shelter by spraying or roll coating polyurethane foam on the shelter interior either in the factory or after erection of the shelter in the field. A polyvinyl parting agent is applied to the interior of panels prior to the application of the foam so as to permit removal of the foam when the shelter is disassembled.

An alternative method of insulation is the use of fire retardant, vinyl-coated, sail cloth type fabric having metal grommets spaced to match the bolt pattern on the inner flanges. Securing such fabric to the inner flanges provides a double-wall construction consisting of the fabric and the panels with an air pocket between.

An alternative construction for the panels is to provide oppositely projecting flanges at the widthwise edges as well as the lengthwise edges. This will eliminate the need for overlapping, and all of the panels may be secured by butting adjacent flanges.

It will be apparent to persons skilled in the art that many modifications and adaptations of the disclosed construction will be available to persons skilled in the art

without departure from the spirit of the invention. For example, the shelter need not be semi-circular, but may have a cross section which includes any variety of curved and/or straight panels. Also, while corrugations are preferred in most applications, there may be uses where flat panels are sufficient. Other materials in addition to fiber reinforced resins are contemplated in accordance with this invention, and sheet metals, while heavier, may be preferable in many applications. The oppositely projecting flanges are preferred where stacking is a problem, but panels having flanges projecting in one direction may also be used, particularly if the projecting angle is slightly less than 90 degrees. It is intended, therefore, that this invention be limited only by the following claims as interpreted in the light of the prior art.

What is claimed is:

1. A transportable shelter comprised of a plurality of elongated construction panels of identical size and configuration, each of said construction panels being comprised of flexible sheet material and being curved along the length thereof, each of said panels having two integral flanges extending substantially the entire length thereof, one of said flanges projecting at right angles from one lengthwise edge thereof, and the other projecting at right angles from the other lengthwise edge thereof, said flanges projecting in opposite directions whereby said panels may be stacked in a minimum volume package during transportation thereof, said flanges serving to reinforce said panel, said plurality of panels being positioned side by side and lengthwise, the flanges of adjacent panels projecting in the same direction and being butted and secured together, the widthwise edges of adjacent panels being joined whereby a self-supporting arched shelter is provided, said flanges providing arched truss members for said shelter.

2. The invention as defined in claim 1 wherein said panels are corrugated in a lengthwise direction.

References Cited by the Examiner

UNITED STATES PATENTS

2,167,370	7/39	De Pfyffer	189—1
2,297,175	9/42	Tarran	189—1 X
2,655,978	10/53	Gonda et al.	20—91 X
2,836,406	5/58	Nutter	189—36 X
2,933,056	4/60	Martin	189—1 X

RICHARD W. COOKE, JR., *Primary Examiner.*