Feb. 10, 1925. 1,525,517

W. H. SMITH.

STOP AND WASTE COCK

Filed May 16, 1921

Fig. 1.

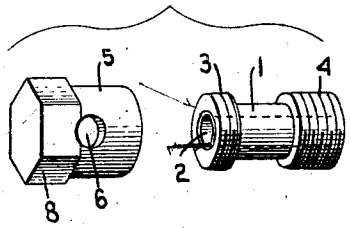

Fig. 2.

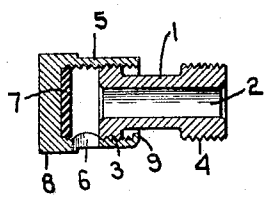

Fig. 3.

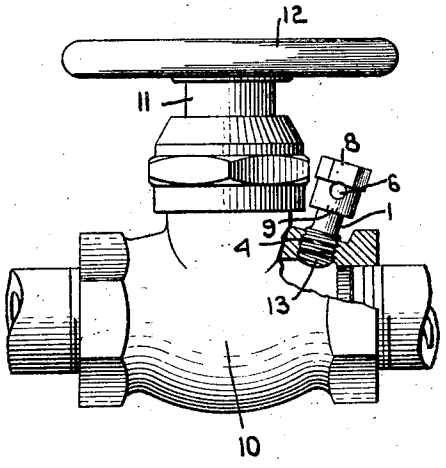

Fig. 4.

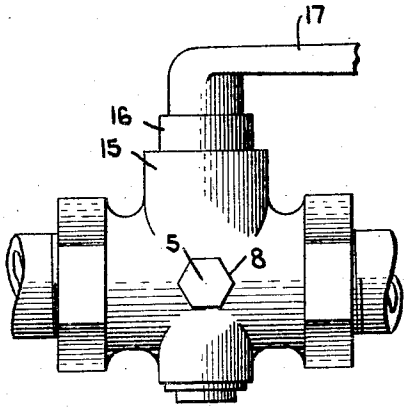

INVENTOR.

William H. Smith

BY

Harold Elmo Smith

ATTORNEY.

Patented Feb. 10, 1925. 1,525,517

UNITED STATES PATENT OFFICE.

WILLIAM H. SMITH, OF EAST CLEVELAND, OHIO.

STOP AND WASTE COCK.

Application filed May 16, 1921. Serial No. 470,101.

To all whom it may concern:

Be it known that I, WILLIAM H. SMITH, a citizen of the United States, residing at East Cleveland, in the county of Cuyahoga and State of Ohio, have invented a certain new and useful Improvement in Stop and Waste Cocks, of which the following is a full, clear, and exact description, reference being had to the accompanying drawings.

This invention relates to the general class of devices used by plumbers under the name of stop and waste cocks for the purpose of closing off water pipes and allowing the water to drain therefrom in order to permit repairs, prevent freezing, etc. Numerous devices of this general purpose are known in the trade, some being of the turning plug variety and some of the compression valve type. In stop and waste cocks of the turning-plug type the waste orifice is generally opened automatically by the turning of the valve so that wasting takes place whether or not it be desired; in the case of the compression stop and waste the two features are generally operated independently of each other but ordinarily the construction is more complicated and expensive than that of the mere compression valve. Moreover the usual waste valve heretofore provided has possessed no means for directing the waste stream in any particular direction, although the user has sometimes attached a separate pipe thereto for that purpose.

The objects of the present invention are the provision of a small, simple, self-contained, and inexpensive article of manufacture which can be applied to any standard stop and waste cock of the turning plug variety so as to permit or prevent wasting at will; or which can be applied to any standard type of compression valve to convert the same into a waste cock without other change thereon; the provision of a device of this character which when applied to such a cock shall have the double function of directing and controlling the waste stream; the provision of a new and improved means for applying such a wasting device; while further objects and advantages of the invention will become apparent as the description proceeds.

In the drawings accompanying and forming a part of this application I have illustrated certain embodiments of my said invention. Fig. 1 is a separated perspective view of my improved device prior to assembly; Fig. 2 is a longitudinal sectional view through said device subsequent to assembly but prior to its application to the waste cock; Fig. 3 illustrates said device as applied to a compression valve; and Fig. 4 illustrates the same device as applied to a stop and waste cock of the turning plug variety.

Describing by reference characters the parts shown in these drawings, 1 represents a cylindrical metallic body having a longitudinal bore 2 formed at its ends with the externally screw threaded enlargements 3 and 4. Threaded on one of these enlargements, as 3, is the internally-threaded, hollow cap 5 having in one side the waste orifice 6 and having in one end the seating washer 7. I have shown the cap as provided with a hexagonal head 8, but any suitable arrangement can be employed for turning the same. Both these parts can be made very cheaply by automatic machinery, and as soon as they are threaded the mouth of the cap is slightly dented or deformed as shown at 9 to provide a projection working in the space between the enlargements so as to prevent its removal while permitting sufficent lateral movement to open and close the orifice.

10 represents the body of a compression valve of any suitable, desired, or standard form, having an operating stem 11 and a suitable handle 12. Such a valve can be converted into a waste valve merely by forming the same at some convenient point with a threaded opening 13 adapted to receive the enlargement 4 which is screwed therein by means of the hexagonal portion 8 on the cap 5. This opening 13 can be formed at any point in outlet side of the valve body, top, bottom or side but I have shown it as located on top of the body between the neck and the enlargement adjacent thereto inasmuch as the device will always be at least as accessible as the handle 12.

The reference character 15 in Fig. 4 represents the body of a turning plug stop cock, the turning plug being shown at 16 and its handle at 17. The hole ordinarily formed in the side of such body for the escape of the waste is generally screw threaded for the reception of a nipple or pipe by which the direction of the stream can be controlled, and my improved fitting is screwed

into the same opening, thus not only controlling the direction of the outflow in accordance with the way the cap is turned, but also enabling the wasting action to be prevented when desired.

Having thus described my invention what I claim is:

1. As an article of manufacture a longitudinally bored metal member having externally threaded enlargements at its ends, and an internally threaded cap screwed on one of said enlargements and having one of its ends closed and an orifice in its side, the length of said cap being such that when screwed entirely onto its enlargement it extends substantially to the other enlargement.

2. As an article of manufacture a longitudinally bored metal member having an externally threaded enlargement at one end and securing means at the other, an internally threaded cap screwed on said enlargement and having a seating member therein and an orifice in its side, the length of said cap being such that when screwed entirely onto its enlargement it extends substantially to the other enlargement, and integral means carried by the edge of said cap and partially closing the mouth thereof to prevent its removal from said enlargement.

3. As an article of manufacture, a waste vent for stop cocks consisting of a longitudinally bored member having externally screw threaded enlargements at its ends, a hollow cap threaded on one of said enlargements and having a venting orifice in one side, said cap being of such length as substantially to cover the portion of said member between said enlargements and being itself formed for the engagement of a rotating tool, and an integral portion of said cap adjacent to its mouth being bent inwardly to prevent the complete unscrewing of said cap from said member.

4. As an article of manufacture and sale a waste vent for stop cocks consisting of a longitudinally bored member having threaded portions at both ends, and a hollow cap nut screwed on one of said threaded portions and having a waste passage in its side, said nut constituting a tool for screwing the other of said threaded portions into a stop cock and having its internal surface formed to engage said first member in abutting relation to close the bore therein and to cooperate and rotate the same without deformation when used as a tool.

5. A valve of the kind described comprising a body portion having an internally bored projection located in the plane with the valve neck and pipe line, the extremity of said projection being exteriorly screw threaded, a cap threaded on said neck, a second cap threaded on said projection outside the limits of said first cap and having a waste orifice in its side, and interfitting means carried by said second cap and the projection on which it is screwed for preventing removal of such cap while permitting sufficient movement thereof to open and close said orifice.

In testimony whereof, I hereunto affix my signature.

WILLIAM H. SMITH.