Feb. 10, 1953 L. TRIOLO 2,627,629

MACHINE FOR CREASING BOX BLANKS

Filed Aug. 4, 1949 4 Sheets-Sheet 1

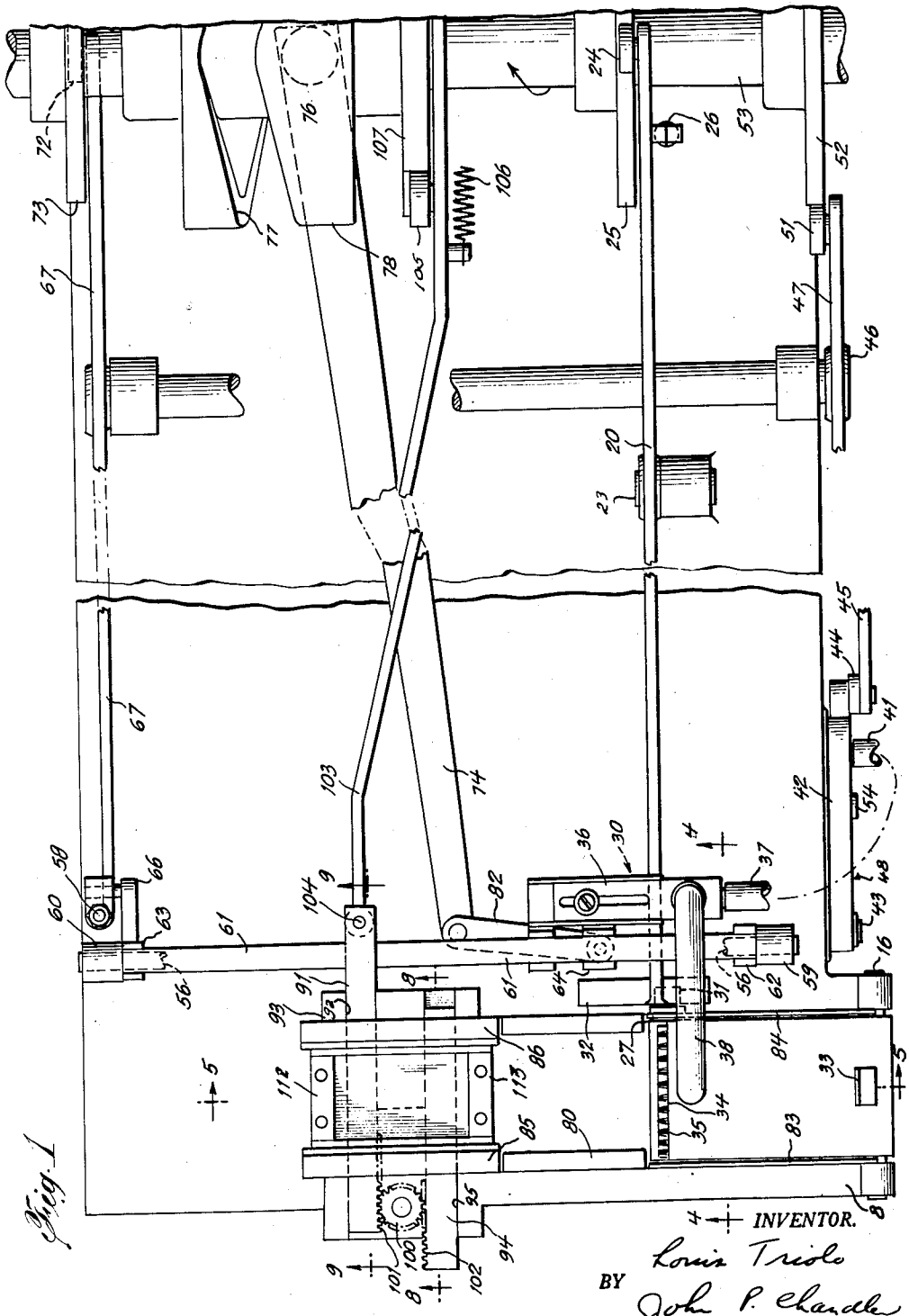

Fig. 1

INVENTOR.
Louis Triolo
BY John P. Chandler
his ATTORNEY

Feb. 10, 1953 L. TRIOLO 2,627,629

MACHINE FOR CREASING BOX BLANKS

Filed Aug. 4, 1949 4 Sheets-Sheet 2

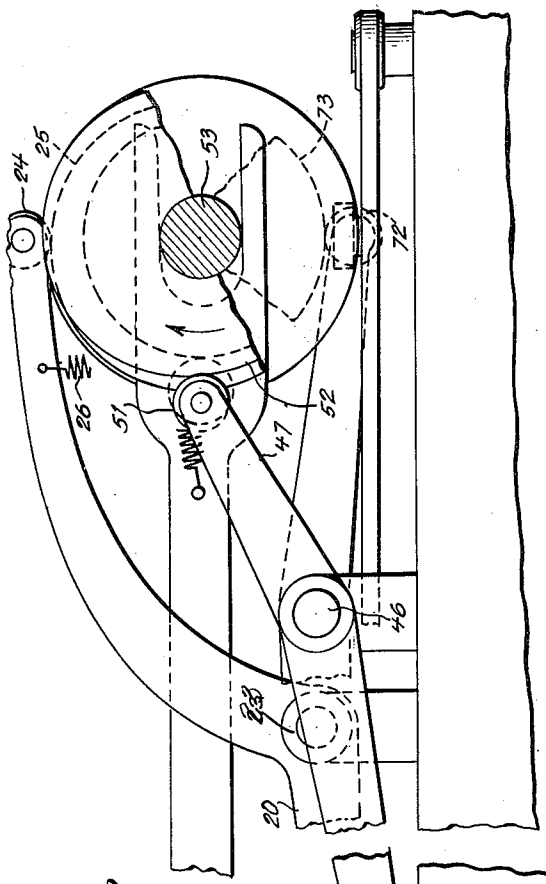

Fig. 2

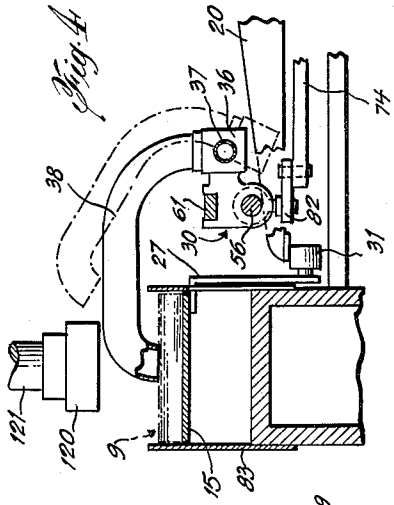

Fig. 4

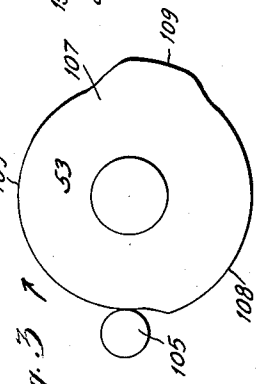

Fig. 3

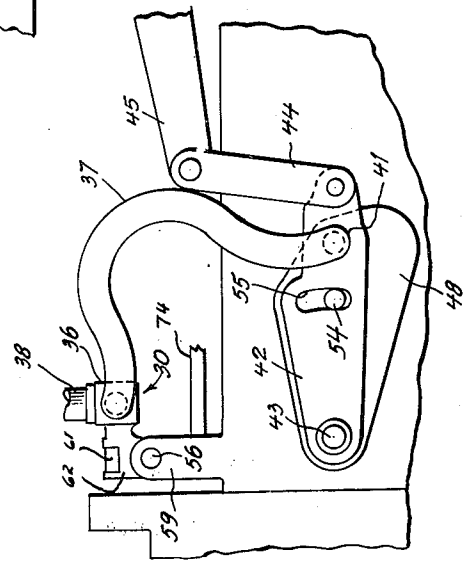

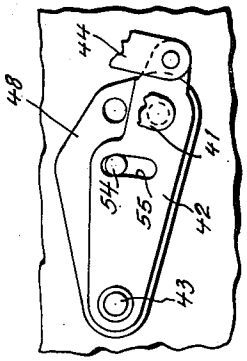

INVENTOR.
Louis Triolo
BY John P. Chandler
his ATTORNEY

Feb. 10, 1953 L. TRIOLO 2,627,629

MACHINE FOR CREASING BOX BLANKS

Filed Aug. 4, 1949 4 Sheets-Sheet 3

Fig. 5

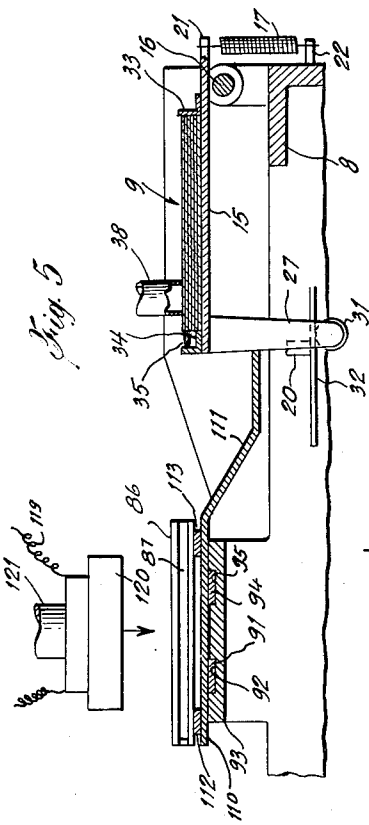

Fig. 6

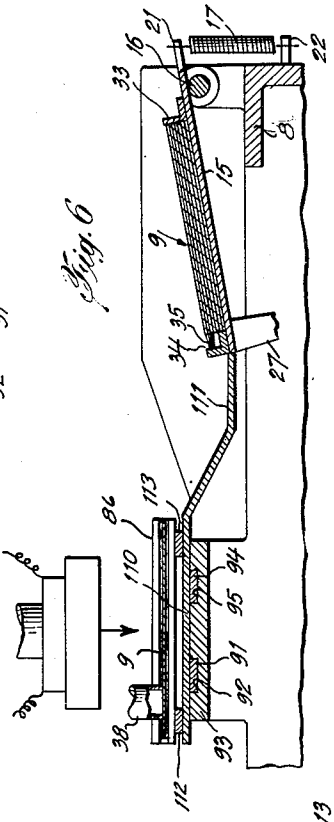

Fig. 7

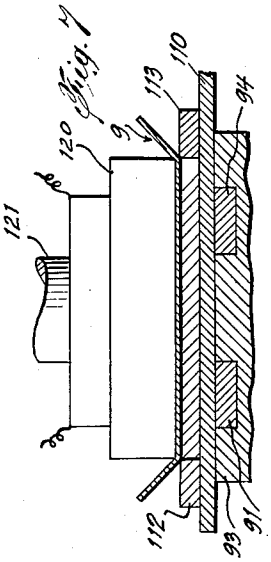

Fig. 8

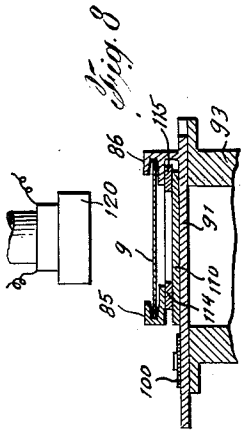

Fig. 9

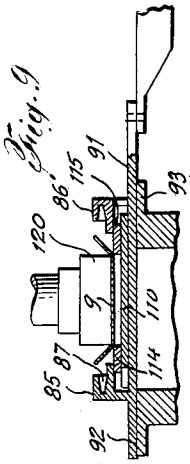

Fig. 10

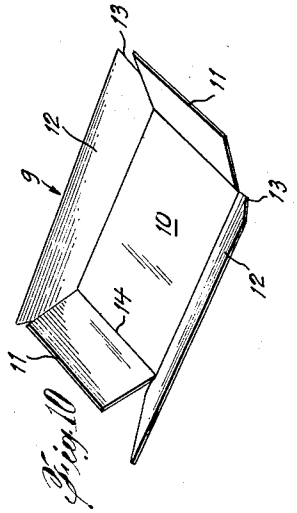

INVENTOR.
Louis Triolo
BY
John P. Chanales
his ATTORNEY

Feb. 10, 1953 L. TRIOLO 2,627,629

MACHINE FOR CREASING BOX BLANKS

Filed Aug. 4, 1949 4 Sheets-Sheet 4

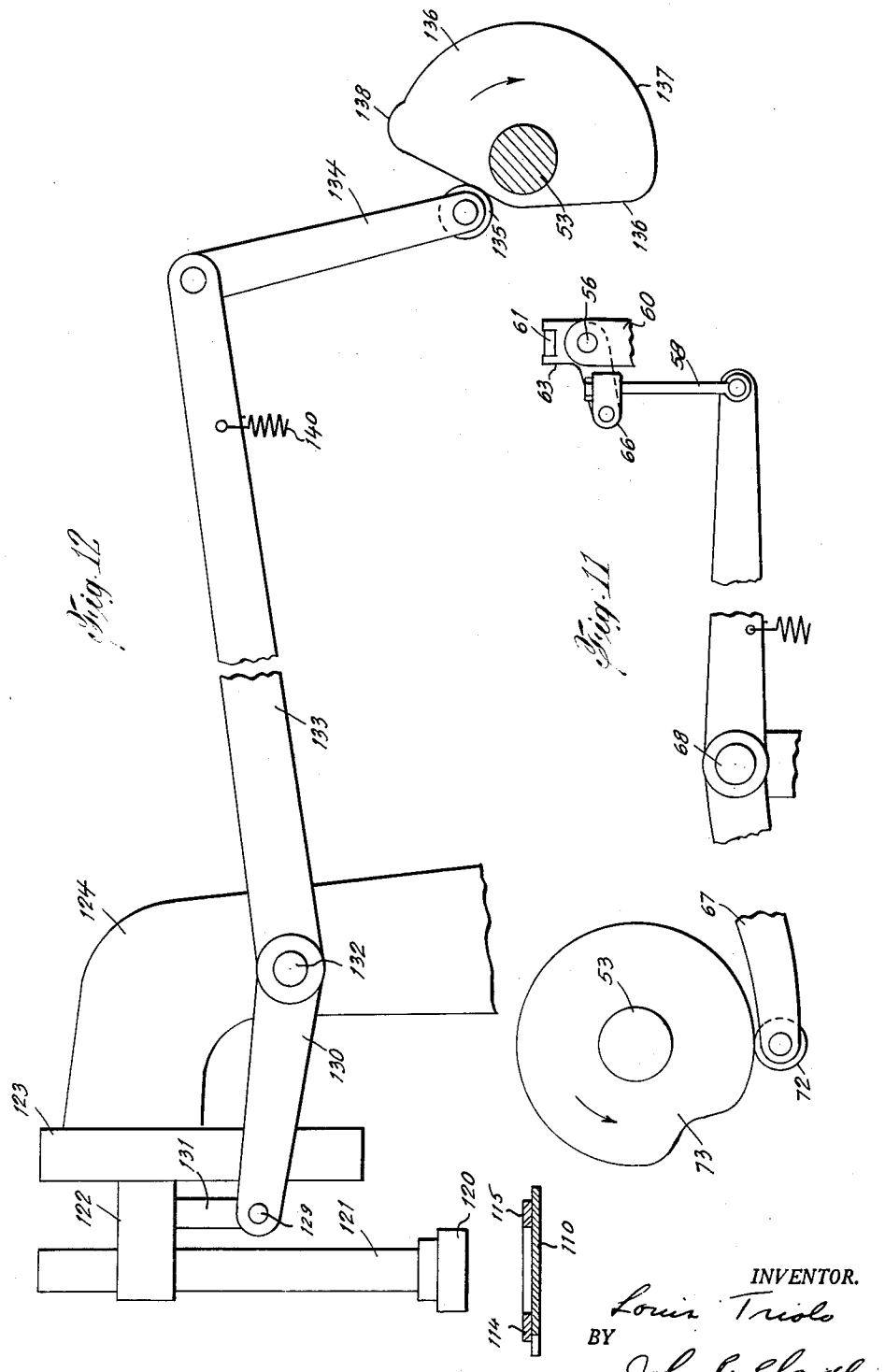

INVENTOR.
Louis Triolo
BY
John P. Chandler
his ATTORNEY

Patented Feb. 10, 1953

2,627,629

UNITED STATES PATENT OFFICE

2,627,629

MACHINE FOR CREASING BOX BLANKS

Louis Triolo, Brooklyn, N. Y.

Application August 4, 1949, Serial No. 108,456

10 Claims. (Cl. 18—19)

1

This invention relates to a machine for creasing box blanks and relates more particularly to a novel machine designed primarily for operating on box blanks made from plastic materials where heat must be applied at the crease lines.

An important object of the invention is to provide an improved machine which is under the control of a single operator and which successively takes a blank from a stack, conveys it to a crease applying station and then moves it downwardly between complemental male and female dies, one of which is heated, thus applying a plurality of permanent fold lines which prepare the blank for subsequent operation by a second machine which applies adhesive to tabs formed at opposite ends of two opposed side walls and completes the box.

The manufacture of the boxes from blanks formed of acetate and other plastic materials has always presented a problem because of the need for applying heat to the fold lines and many blanks are ruined when conventional folding machines are employed. Accordingly, most boxes formed from the clear transparent plastic materials have been made largely by hand and the resulting cost has been high.

Where machine operations have been attempted there has also been a considerable problem in feeding the blanks, one by one, from a bank of the blanks.

In accordance with the present invention novel suction means are employed for successively withdrawing the uppermost blank, moving it to the creasing station, then engaging it by a forming block or male die, and then moving it into engagement with the female die while carefully guiding the blank in the course of its movement so as to accurately crease the blank.

Another object of the invention is to carefully control the speed of engagement between the dies so as to delay the actual creasing operation until suitable heat has been applied along the creasing line.

In the drawing:

Fig. 1 is a broken plan view of a machine embodying the present invention.

Fig. 2 is a broken end elevation taken at the left hand end of the view of Fig. 1 and showing the cam shaft and cams thereon which drive the several operating parts of the machine.

Fig. 3 shows a portion of the mechanism of Fig. 2 with the valve member in closed position.

Fig. 4 is a broken vertical section taken on line 4—4 of Fig. 1 and showing certain details of the blank delivering mechanism.

2

Fig. 5 is a broken section taken on line 5—5 of Fig. 1 and showing details of the blank delivering mechanism.

Fig. 6 is similar to Fig. 5 but shows the blank supporting platform in lowered position.

Fig. 7 is a section taken through the female die and showing an end elevation of the male die.

Fig. 8 is a broken section taken on line 8—8 of Fig. 1.

Fig. 9 is a broken section taken on line 9—9 of Fig. 1.

Fig. 10 is a perspective view of the blank after it has been operated on by the machine of the present invention.

Fig. 11 is a broken end elevation showing the means for oscillating the blank conveyor assembly.

Fig. 12 is a broken end elevation showing the head which supports the plunger upon which the forming block is mounted.

Fig. 13 is an elevational view of one of the cams.

The blank 9 is initially flat and its contour or condition after it has been operated on by the machine of the present invention is shown in Fig. 10.

This creased blank includes a base 10, end walls 11, side walls 12 having gluing tabs 13 at each end thereof for attachment to the end walls 11. The machine of the present invention forms the crease lines 14 which define the four edges of base 10. It could be modified to also form the crease line defining the connection of tabs 13 with side walls 12. It has been found more satisfactory to form these crease lines by the adhesive applying machine which sets up the box.

The blank shown in Fig. 10 is longer than it is wide and hence the reference to end walls as the shorter ones and side walls as the longer ones. It will be appreciated, however, that the machine of the present invention may be quickly changed over to operate on a square box with all side walls of equal length.

A pile of the blanks 9 is supported by a platform 15 which is pivotally supported at its rear end on stud 16 which is mounted on the frame 8 and which is urged upwardly at its forward end by a spring 17 connected at one end to an extension 21 to the rear of the stud and at its other end to a pin 22 carried by the frame.

Means for normally holding platform 15 downwardly comprise a lever 20 centrally pivoted at 23 and whose rear end is provided with a roller 24 which engages a generally circular cam 25 having a single arcuately curved recess (not

shown) which, when roller 24 falls into such recess, causes the opposite end of the lever to rise. A spring 26 urges the rear section of the lever downwardly, forcing the roller into engagement with the cam surface. The cam 25 is keyed to a cam shaft 53.

Platform 15 is provided with a downwardly extending bracket 27 having a roller 31 which is engaged by a flat plate 32 carried at the forward end of lever 20. Thus, as such forward section of the lever descends, the forward end of the platform falls from the position of Fig. 5 to the position of Fig. 6.

Means for holding the blanks in alignment on platform 15 include a rear stop 33 and a forward stop 34. For the purpose of effectively separating the uppermost blank from the pile, a brush 35 is carried by stop 34 and, if for any reason, the second blank should adhere to the first after it has been picked up, the brush wipes it off on the down stroke by engaging the edge thereof.

When the platform is raised, the uppermost blank is picked up by a nozzle 38 mounted on a bracket 36 carried by a movable assembly 30. A flexible conduit 37 is connected at one end thereof with the nozzle and the other end 41 thereof is connected to a lever 42 pivoted at 43. This lever constitutes the movable valve member of a rotary slide valve 48 and when lever 42 is in its lowered position (Fig. 3) the valve is open and conduit thus becomes connected with a suction pump (not shown). In its raised position (Fig. 2) the valve is closed and pressure in the nozzle is neutral. Means for raising and lowering lever 42 comprise a link 44 connected also with a bell-crank lever 45 pivoted at 46. The opposite arm 47 of the bell-crank lever carries a roller 51 at its outer end which engages a cam 52 keyed to cam shaft 53. A pin 54 in slot 55 limits travel of lever 42. The shapes of these cams are not illustrated for the reason that they are simple cams which perform simple operations.

Assembly 30 and bracket 36 which supports nozzle 38 is secured to a shaft 56 which is mounted for longitudinal sliding movement in bearings 59 and 60, the bearings also permitting rotative movement of the shaft.

Means for causing oscillating movement of shaft 56 and, accordingly, assembly 30 and bracket 36, to move nozzle 38 toward blanks 9, comprise a non-circular rod 61 which is eccentrically disposed relative to shaft 56 and which is mounted at its opposite ends in bushings 62 and 63 freely mounted on shaft 56. Any substantial longitudinal movement of bushings 62 and 63 on shaft 56 is prevented by bearings 59 and 60. A guide 64 carried by bracket 36 is arranged for sliding movement on rod 61. Bushing 63 carries a crank 66 which is caused to oscillate by link 58 connected thereto and also to a lever 67 centrally pivoted at 68 and provided at its opposite end with a roller 72 which engages a cam 73 also keyed to cam shaft 53. Thus, as crank 66 is oscillated, bracket 36 and nozzle 38 are oscillated from the position of Fig. 5 where the latter picks up the blank and starts its straight-line travel to the creasing station, to a raised position when it commences its longitudinal travel back from the creasing station.

This travel is accomplished by a lever 74 pivoted at its rear end on a vertical axis and having a roller 76 which is engaged by walls of a groove 77 in a drum cam 78 also keyed to cam shaft 53.

At its opposite end lever 74 is connected by means of a link 82 with assembly 30 which carries the nozzle.

Platform 15 carrying the blanks 9 is normally in its lowered position of Fig. 6 and is held in such position against the raising influence of spring 17 by means of lever 20 and plate 32 which engages roller 31. As lever 20 is raised, due to roller 24 falling into the recess in cam 25, the exit end of nozzle 38 is lowered due to assembly 30 turning in a counter-clockwise direction when viewed as in Fig. 2 and during this movement rotary slide valve member 42 moves downwardly, thus opening the valve to the source of negative pressure, and when the nozzle is contacted by uppermost blank (Fig. 5), the nozzle starts to move longitudinally to the creasing station. Just before this movement starts, platform 15 and the remaining blanks start to descend to the position of Fig. 6. Brush 35 removes the next lower blank from the one departing from the pile, should there be any tendency to stick. The pick-up end of nozzle 38 descends to the same level at the start of each cycle of operation although as the blanks are successively removed from the top of the pile, it is necessary for platform 15 to swing upwardly a progressively increasing distance since the pile becomes lower. Inasmuch as upward movement of the platform is achieved by action of spring 17 this distance of travel is determined by the height of the pile, the lowered nozzle acting as a stop for this upward movement.

The suction afforded by nozzle 38 is ordinarily sufficient to guide the blank to its proper position relative to the creasing dies. For the purpose, however, of assuring straight-line travel and, more important still, for holding the blank in position after the suction in the nozzle is released, due to closing of valve member 42 at the commencement of the return travel of assembly 30, the following means are provided.

Vertical guide rails 83 and 84 are carried by trackways 85 and 86 which have inwardly facing longitudinal grooves 87 therein. It will be noted from an examination of Fig. 1 that these guide rails extend rearwardly substantially to the axis 16 of platform 15 upon which the blanks are mounted and that upward movement of the blank during travel is prevented by flanges 80. Trackway 86 (Fig. 9) is carried by a cross-slide 91 mounted for straight-line reciprocating movement in a recess 92 in frame member 93. Similarly, trackway 85 (Fig. 8) is carried on cross-slide 94 mounted in recess 95 in the frame for straight-line reciprocating movement. Only cross-slide 91 is driven and as such slide and its trackway moves inwardly (to the left in Figs. 1 and 9) opposite travel of the other slide and its trackway is effected by an idler gear 100 mounted for free rotation on frame 93. This idler engages rack teeth 101 and 102 formed along the inner edges of cross slides 91 and 94, respectively.

Cross slide 91 is caused to reciprocate by lever 103 pivotally connected thereto at 104. The opposite end of this lever is provided with a roller 105 which is urged by spring 106 against a cam 107 also keyed to cam shaft 53.

The cross slides are retained in their respective recesses 92 and 95 by a plate 110 which forms a base for the female die and which extends rearwardly as at 111 substantially to hinged platform 15.

The action of the inwardly movable trackways during travel of the blank will now be described. These trackways have three positions, i. e., an outermost position (Fig. 9), an interme-

diate position (Fig. 8), and an innermost position (not shown).

The contour of cam 107 which controls movement of trackways 85 and 86 is shown in Fig. 13. At the start of the cycle of operation, when nozzle 38 is about to pick up a blank, roller 105 first encounters a rise 108 which causes the trackways to move inwardly from the outermost to the intermediate position, thus causing guide plates 83 and 84 carried thereby to move inwardly to the position shown in Fig. 4 where the latter engage the sides of the blanks and correct any lateral misalignment which may have been caused by the removal of the last blank from the pile.

This intermediate position is maintained during the travel of the blank to the creasing station and after the blank has travelled past the horizontal flanges 80 its opposed marginal edges enter the grooves 87 in these trackways and are retained within such grooves when the blank arrives at the creasing station as shown in Fig. 8. The timing of movement of the parts is such as to cause the forming block or male die 120 to descend from the position of Fig. 8 to the position of Fig. 9 before nozzle 38 is raised upwardly, preparatory for its return travel. The cam which controls downward movement of the forming block will be discussed later but for present purposes it will suffice to note that when this forming block descends from the position of Fig. 8 to the position of Fig. 9 it momentarily dwells in this latter position for a brief period to enable the heated forming block to impart sufficient heat to the crease lines.

The downward movement of the blank from the position of Fig. 8 to the position of Fig. 9 is slight, but is nevertheless sufficient to provide an opportunity for the blank to become misaligned relative to the female die. To support the blank during this period of downward movement, the trackways 85 and 86 are arranged to move inwardly slightly, thus assuring the blank being accurately positioned relative to the female die. This further inward movement is caused by roller 105 contacting a further rise 109 in cam 107. Thus, by the time the forming block has moved downwardly to the position of Fig. 9, the need for further support of the blank by the trackways is eliminated and these trackways, accordingly, move back to their outermost position shown in Fig. 9. This outward movement is accomplished by further rotation of cam 107 which causes the follower to ride over the lowest part 109' of the cam.

The female die consists of two lateral plates 112 and 113 and two longitudinal plates 114 and 115 which are securely mounted on plate 110. The inner edges of these four plates coincide with the crease lines 14 of the blank and if a box of different size or shape is desired it is only necessary to replace plate 110 carrying the four die plates of the changed proportions.

The dimensions of male die or forming block 120 are smaller than the dimensions of the female die by an amount equal to the thickness of the blank.

The forming block 120, which is mounted at the lower end of plunger 121 is provided with suitable heating means such as a resistance coil (not shown) which is connected with wires 119.

Plunger 121 is mounted for reciprocating movement in a slideway 122 supported by a block 123 at the upper end of a head 124 which is mounted at its lower end on the frame. One end of a bell-crank lever 130 is secured to a vertical projection 131 at 129. The bell-crank lever is pivoted at 132 on the head and the opposite arm 133 of the lever is connected at its outer end with the upper end of a link 134. The lower end of such link carries a follower 135 which engages the external periphery of a cam 136 carried by cam shaft 53. This cam has an inclined surface 136 upon which the follower travels during the first part of the cycle to cause the forming block to descend from the position of Fig. 8 to that of Fig. 9. The forming block stays in the latter position during the travel of the follower over concentric surface 137, this dwell being necessary to allow sufficient heat to be imparted to the crease lines of the blank. The follower then encounters rise 138 which moves the forming block downwardly from the position of Fig. 9 to its lowermost position, where the heated blank has become creased by coaction between the female die and the plunger. The plunger then rises due to action of spring 140 and the creased blank is moved upwardly from the female die by any suitable ejector and is moved from the creasing station by nozzle 38 arriving with the next blank.

The operation of the machine is as follows. A pile of the blanks 10 are placed upon hinged platform 15 and the motor operating the cam shaft is energized. Assembly 30 moves to starting position and nozzle 38 descends to its normal position. Valve 42 opens the suction line and the platform 15 rises by action of spring 17 until the top blank contacts the nozzle. Assembly 30 now travels to operating station and positions the blank over the female die as the plunger carrying the male die descends.

Trackways 85—86 move inwardly as the die moves from the position of Fig. 8 to that of Fig. 9 where it dwells long enough to heat the crease lines. Valve 42 closes since nozzle 38 has done its work. As the die descends to final position, assembly 30 returns to starting position for a new blank.

While one form or embodiment of the invention has been shown and described herein for illustrative purposes, and the construction and arrangement incidental to a specific application thereof have been disclosed and discussed in detail, it is to be understood that the invention is limited neither to the mere details or relative arrangement of parts, nor to its specific embodiment shown herein, but that extensive deviations from the illustrated form or embodiment of the invention may be made without departing from the principles thereof.

What I claim is:

1. A machine for creasing box blanks made from plastic material and comprising a frame, a support for a pile of the blanks, fixed and movable dies for creasing the blanks, at least one of such dies being provided with heating means, and means for conveying the blanks, one by one, from the pile to the creasing dies and comprising a longitudinally movable conveyor assembly provided with pick-up means arranged to remove the top blank and convey the same to the creasing dies, and laterally movable trackways mounted on the frame which engage opposed edges of the blank during conveying and which move inwardly as the movable die approaches the fixed die.

2. A machine for creasing box blanks made from plastic material and comprising a frame, a support for a pile of the blanks, fixed and movable dies for creasing the blanks, the male die being provided with electric heating means, and means for conveying the blanks, one by one, from

the pile to the creasing dies and comprising a longitudinally movable conveyor assembly provided with suction pick-up means arranged to remove the top blank and convey the same to the creasing station, and laterally movable trackways mounted on the frame which engage opposed edges of the blank during conveying and which move inwardly as the movable die approaches the fixed die.

3. A machine for creasing box blanks and comprising a frame, a support for a pile of the blanks, a fixed female creasing die, a vertically movable male creasing die, and means for conveying the blanks, one by one, from the pile to the creasing dies, a cam shaft, a plurality of cams keyed thereto and means for driving the cam shaft, one of such cams controlling movement of the male die, said blank conveying means comprising a longitudinally movable conveyor assembly including a suction nozzle which removes the top blank and conveys the same to the creasing dies, a lever driven by one of the cams for imparting movement to the conveyor assembly, and laterally movable trackways mounted for reciprocating movement in the frame and which engage two opposed edges of the blank during conveying and which move inwardly as the male die descends.

4. A machine for creasing box blanks and comprising a frame, a support for a pile of the blanks, a fixed female creasing die, a vertically movable male creasing die, electric heating means associated with the male die, a cam shaft, a plurality of cams keyed thereto, and means for driving the cam shaft, one of such cams controlling movement of the male die, a pivoted, longitudinally movable conveyor assembly including a suction nozzle which descends upon the top blank and conveys the same to the creasing dies, a lever driven by one of the cams for imparting said longitudinal movement to the conveyor assembly, means for pivotally moving the suction nozzle downwardly to the pile and for raising it and comprising a guide member associated with the nozzle, and a rod engaging the guide member to produce said pivotal movement, and a cam and lever for moving the rod.

5. A machine for creasing box blanks made from plastic material and comprising a frame, a support for a pile of the blanks, a fixed female creasing die, a vertically movable male creasing die provided with heating means, and means for conveying the blanks, one by one, from the pile to the creasing dies, a cam shaft and a plurality of cams keyed thereto, the support for the blanks comprising a movable plate which is spring-urged upwardly, a lever driven by one of said cams for lowering the support, said blank conveying means comprising a longitudinally movable conveyor assembly including an oscillating suction nozzle which descends upon the blanks as the support is moved upwardly and removes the top blank and conveys the same to the creasing dies, levers driven by other of said cams for imparting said oscillating and longitudinal movement to the conveyor assembly, and laterally movable trackways slidably mounted on the frame which engage two opposed edges of the blank during conveying and which move inwardly as the male die descends.

6. A machine for creasing box blanks and comprising a frame, a support for a pile of the blanks, a fixed female creasing die, a vertically movable male creasing die, heating means associated with one of the dies and means for conveying the blanks, one by one, from the pile to the creasing dies, a cam shaft provided with a plurality of cams, the blank support comprising a movable plate which is spring-urged upwardly, a lever driven by one of the cams for lowering the support, said blank conveying means comprising a longitudinally movable conveyor assembly including a suction nozzle which descends upon the blanks as the support is moved upwardly and removes the top blank and conveys the same to the creasing dies, a lever driven by another of said cams for imparting longitudinal movement to the conveyor assembly, a lever driven by another of said cams to raise and lower the nozzle, and laterally movable trackways slidably mounted on the frame which engage two opposed edges of the blank during conveying and which move inwardly as the male die descends.

7. A machine for creasing box blanks and comprising a frame, a support for a pile of the blanks which is pivoted at one end thereof on the frame, a fixed female creasing die, a vertically movable male creasing die, heating means associated with at least one of the dies, and means for conveying the blanks, one by one, from the pile to the creasing dies, a cam shaft provided with a plurality of cams, spring means for urging the free end of the support upwardly, a lever driven by one of the cams for lowering the support, said blank conveying means comprising a pivoted longitudinally movable conveyor assembly including a suction nozzle which descends upon the blanks as the support is moved upwardly and removes the top blank and conveys the same to the creasing dies, means for providing negative pressure for the nozzle, a valve operated from the cam shaft for controlling the negative pressure, levers driven by other of said cams for imparting pivotal and longitudinal movement to the conveyor assembly, and laterally movable trackways mounted on the frame which engage two opposed sides of the blank during conveying and which move inwardly as the male descends.

8. A machine for creasing box blanks and comprising a frame, a vertically movable support for a pile of the blanks mounted on the frame, male and female creasing dies including a fixed die and a vertically movable die, heating means associated with at least one of the dies, and means for conveying the blanks, one by one, from the pile to the creasing dies, a cam shaft provided with a plurality of cams, spring means for urging the support upwardly, one of the cams being operatively connected with the support to lower the same, said blank conveying means comprising a longitudinally movable conveyor assembly including an oscillating suction nozzle which descends upon the blanks as the support is moved upwardly to remove the top blank and convey the same to the creasing station, and levers driven by other of said cams for imparting said descending and longitudinal movement to the conveyor assembly.

9. A machine for creasing box blanks made from plastic material and comprising a frame, a support for a pile of the blanks, a fixed, generally rectangular female creasing die, a vertically movable male creasing die which moves the blank into engagement with the upper edges of the female die and dwells in such position until sufficient heat has been imparted to the lines of the blank about to be creased and then moves the blank into the female die, heating means associated with at least one of the dies, and means for conveying the blanks, one by one, from the pile to the creasing dies, comprising a longitudinally movable conveyor assembly which

removes the top blank and conveys the same to the creasing dies, and laterally movable trackways slidably mounted on the frame which engage two opposed edges of the blank during conveying and then move inwardly to support such edges as the male die moves to initial engagement with the female die.

10. A machine for creasing box blanks made from plastic material and comprising a frame, a support for a pile of the blanks, a fixed generally rectangular female creasing die, a vertically movable male creasing die which moves a blank into engagement with the edges of the female die and momentarily dwells in such position until heat has been imparted to the lines of the blank about to be creased and then moves the blank into the female die, heating means associated with the male die, a cam shaft provided with a plurality of cams keyed thereto, means for driving the cam shaft, a longitudinally movable conveyor assembly which removes the top blank and conveys the same to the creasing dies, a lever driven by one of such cams for imparting movement to the conveyor assembly, and laterally movable blank-guiding trackways which engage two opposed edges of the blank during conveying and then move inwardly to support such edges as the male die moves to engagement with the female die.

LOUIS TRIOLO.

REFERENCES CITED

The following references are of record in the file of this patent:

UNITED STATES PATENTS

Number	Name	Date
225,915	Boyce	Mar. 30, 1880
757,667	Mayall	Apr. 19, 1904
1,094,970	Bertin	Apr. 28, 1914
1,479,401	Smith	Jan. 1, 1924
1,688,459	Forward	Oct. 23, 1928
1,912,733	Simmons	June 6, 1933
2,429,960	Piperoux et al.	Oct. 28, 1947
2,438,498	Geist et al.	Mar. 30, 1948