US006814516B2

(12) **United States Patent**
Tsuchiya et al.

(10) **Patent No.: US 6,814,516 B2**
(45) **Date of Patent: Nov. 9, 2004**

(54) **PRINTER HAVING A CUTTING APPARATUS THAT MAINTAINS A RELATIVE POSITION BETWEEN A MOVABLE CUTTER AND A REMOVABLE FIXED CUTTER**

(75) Inventors: **Masahiro Tsuchiya**, Shinagawa (JP); **Hiromi Ohtsuka**, Shinagawa (JP); **Fumio Sakurai**, Shinagawa (JP)

(73) Assignee: **Fujitsu Component Limited**, Tokyo (JP)

(*) Notice: Subject to any disclaimer, the term of this patent is extended or adjusted under 35 U.S.C. 154(b) by 0 days.

(21) Appl. No.: **10/342,299**

(22) Filed: **Jan. 15, 2003**

(65) **Prior Publication Data**

US 2003/0198499 A1 Oct. 23, 2003

(30) **Foreign Application Priority Data**

Apr. 23, 2002 (JP) 2002-120731

(51) **Int. Cl.**[7] **B41J 11/26**
(52) **U.S. Cl.** **400/621**; 400/611
(58) **Field of Search** 400/621, 693, 400/691, 690.4, 611, 621.1; 347/220, 222

(56) **References Cited**

U.S. PATENT DOCUMENTS

5,579,043 A * 11/1996 Patry 347/222
5,631,690 A * 5/1997 Tashiro et al. 347/220
5,833,380 A * 11/1998 Hosomi et al. 400/621
6,361,231 B1 3/2002 Sato et al. 400/621
6,447,187 B1 * 9/2002 Robinson 400/621

FOREIGN PATENT DOCUMENTS

JP 2000-272200 10/2000

* cited by examiner

Primary Examiner—Anthony H. Nguyen
(74) *Attorney, Agent, or Firm*—Staas & Halsey LLP

(57) **ABSTRACT**

A printer with a guillotine cutter having a movable cutter and a removable fixed cutter in which the relative position between the fixed cutter and the movable cutter does not vary. A cutter fitting member with a bottom plate and a pair of side plates is fixed to the outside of a casing. The side plates respectively have a first projection with positioning holes and a second projection. A movable cutter driving section of the guillotine cutter has small projections that engage the positioning holes, and is fixed to the first projection with screws. The removable fixed cutter is disposed on the second projection with a bottom surface of a projection of the fixed cutter in the width direction closely contacting a first side of the cutter fitting member, and a right end surface of the fixed cutter projection closely contacting a second side of the cutter fitting member.

7 Claims, 10 Drawing Sheets

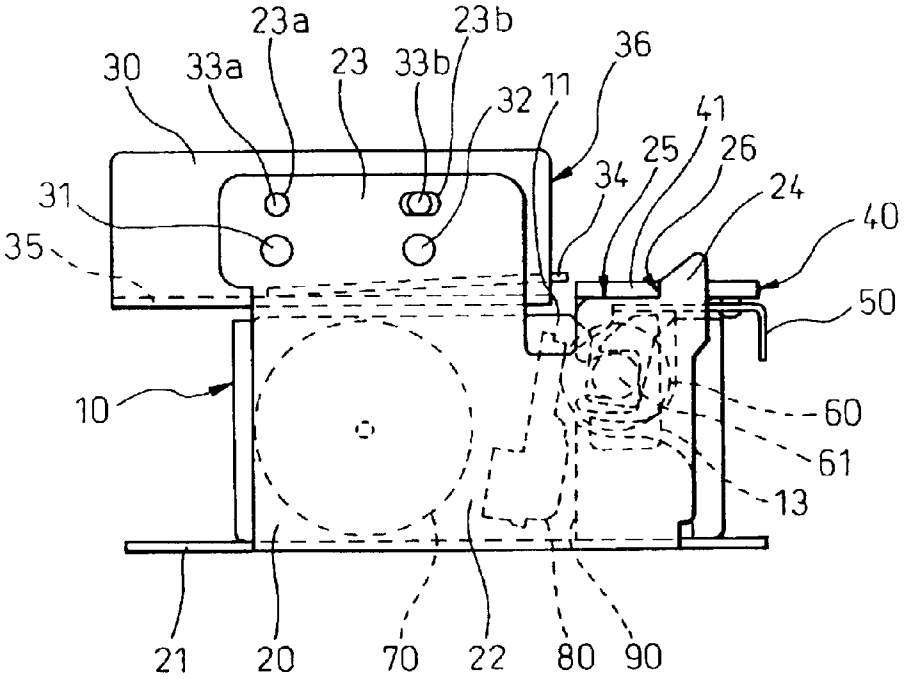

Fig.1

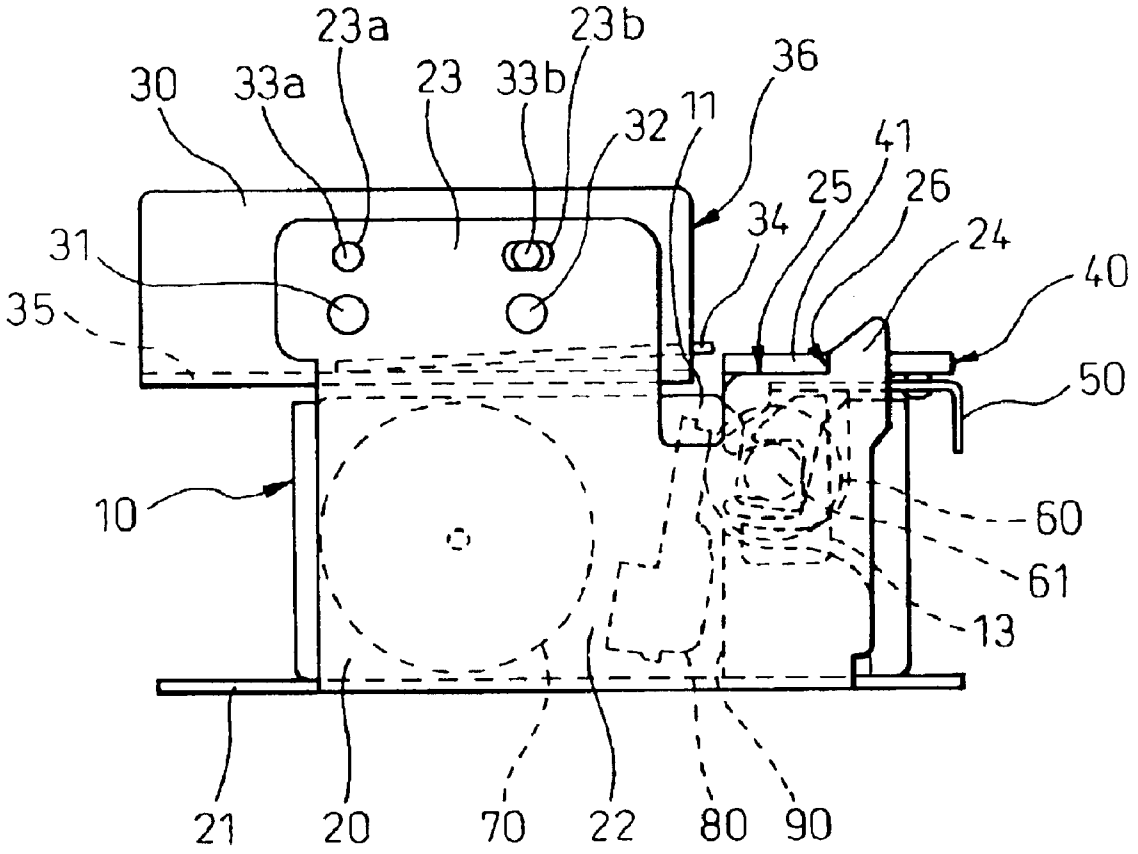
23a
23b
36
30
33a
23
33b
32
11
41
25
26
34
24
31
40
35
50
10
60
61
13
21
20
70
22
80
90

Fig.2

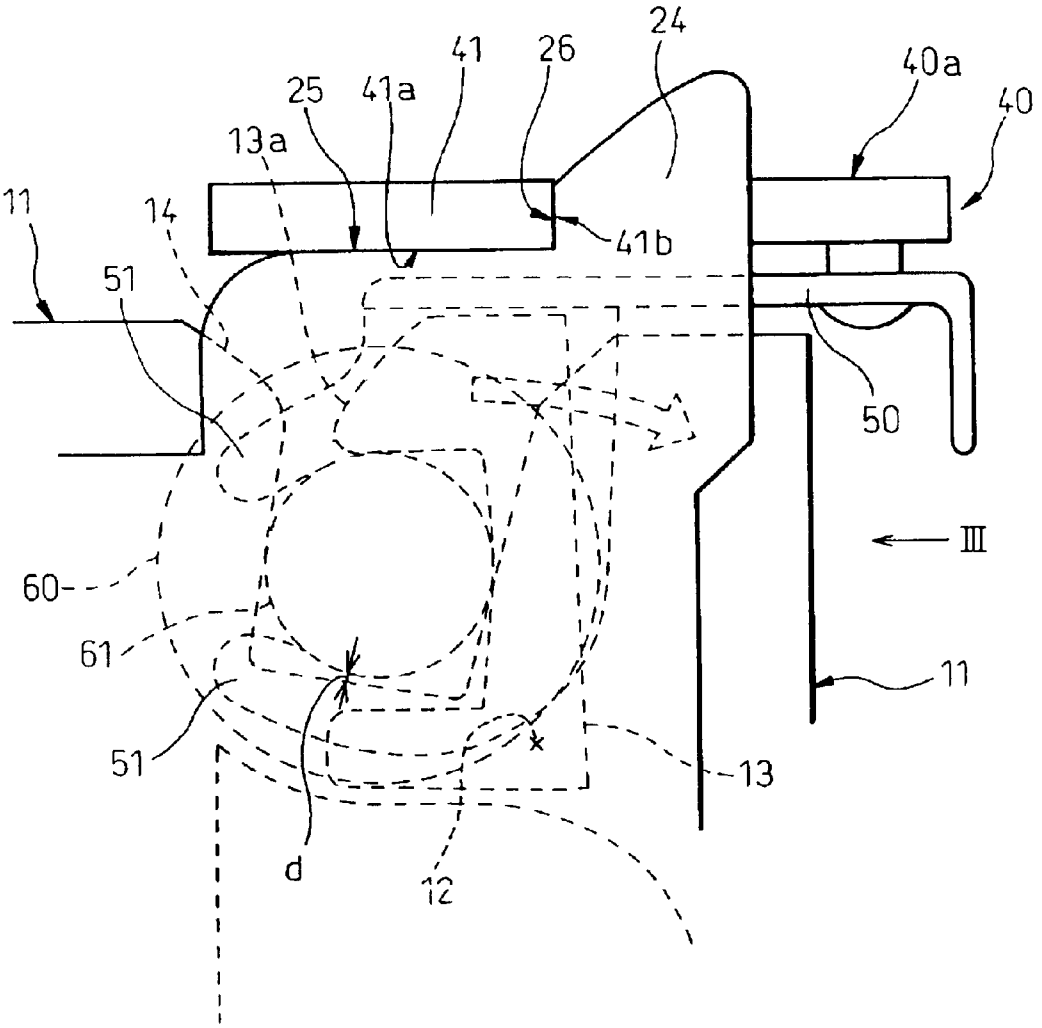

Fig.3

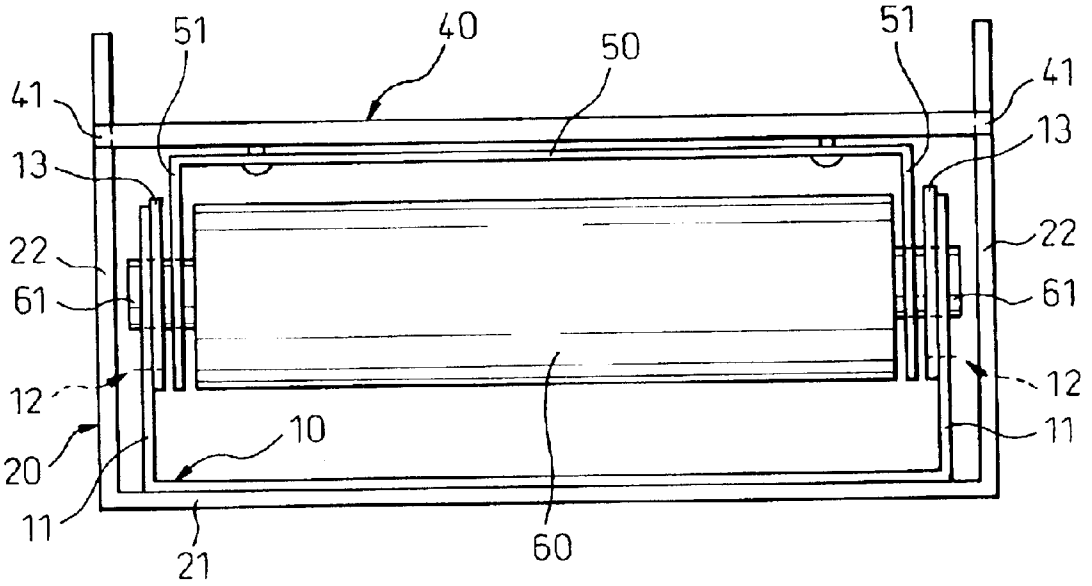
51
40
50
51
41
41
13
13
22
22
61
61
12
12
10
20
11
11
21
60

Fig.4

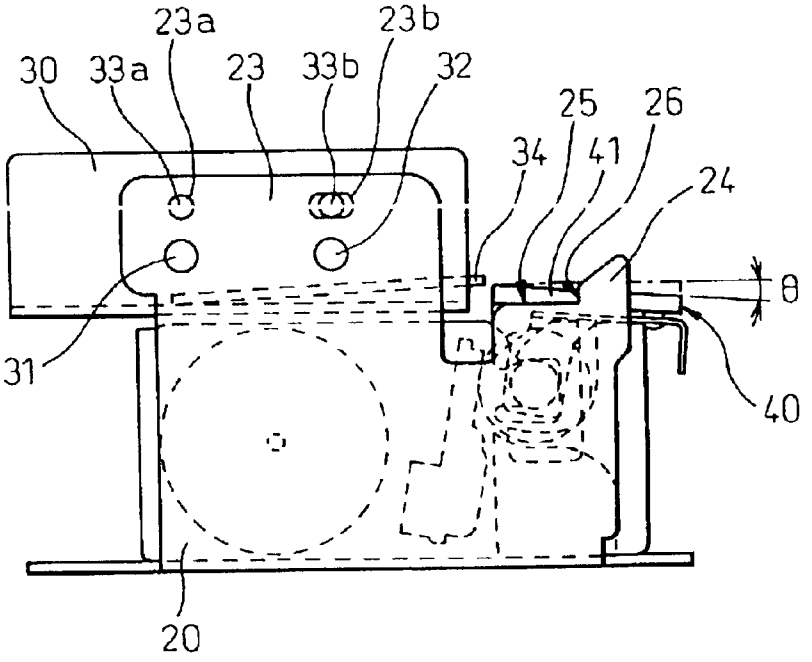
23a
23b
30
33a
23
33b
32
25
26
34
41
24
θ
31
40
20

Fig.5

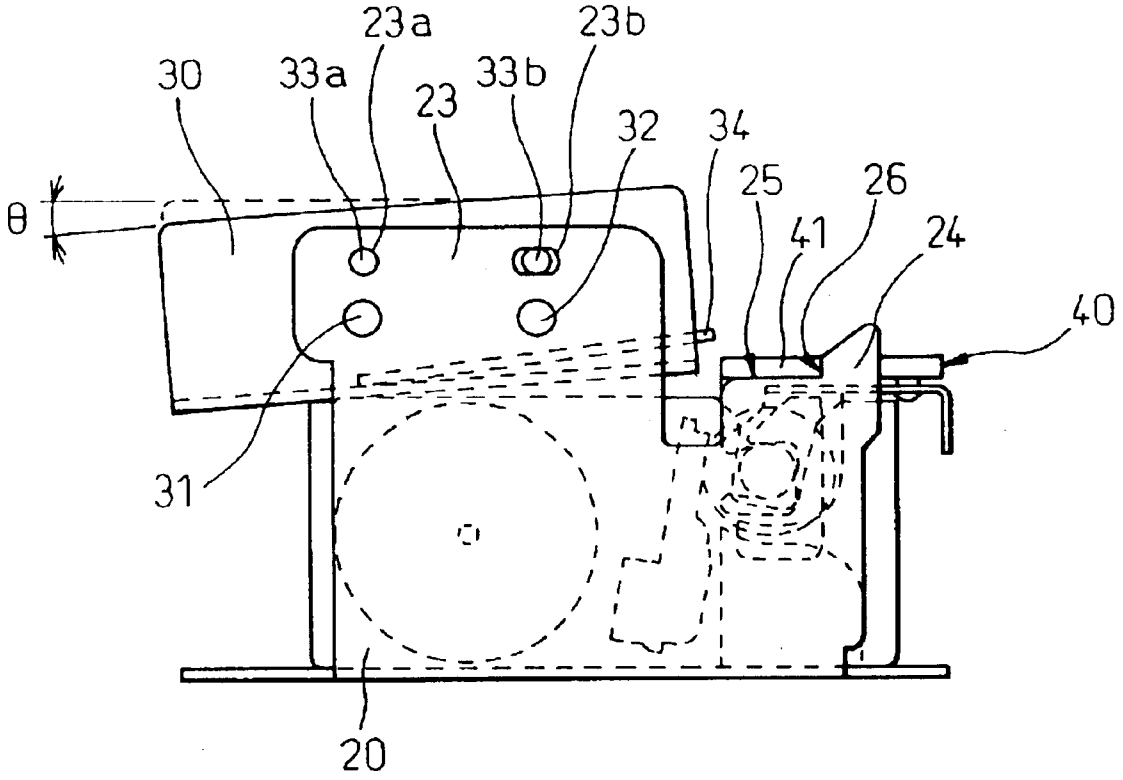

Fig.6B

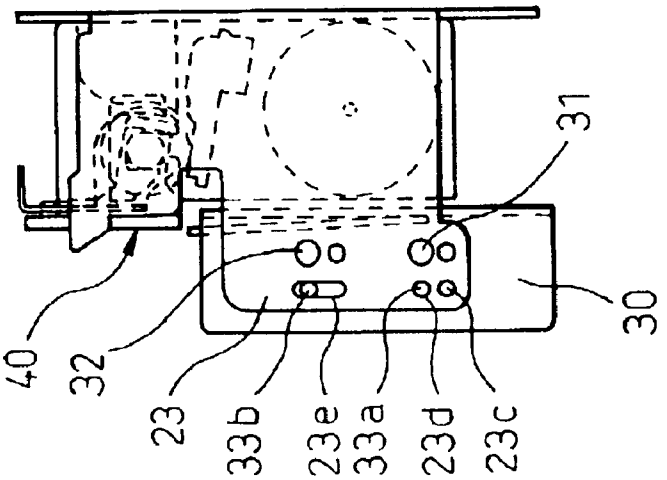

Fig.6A

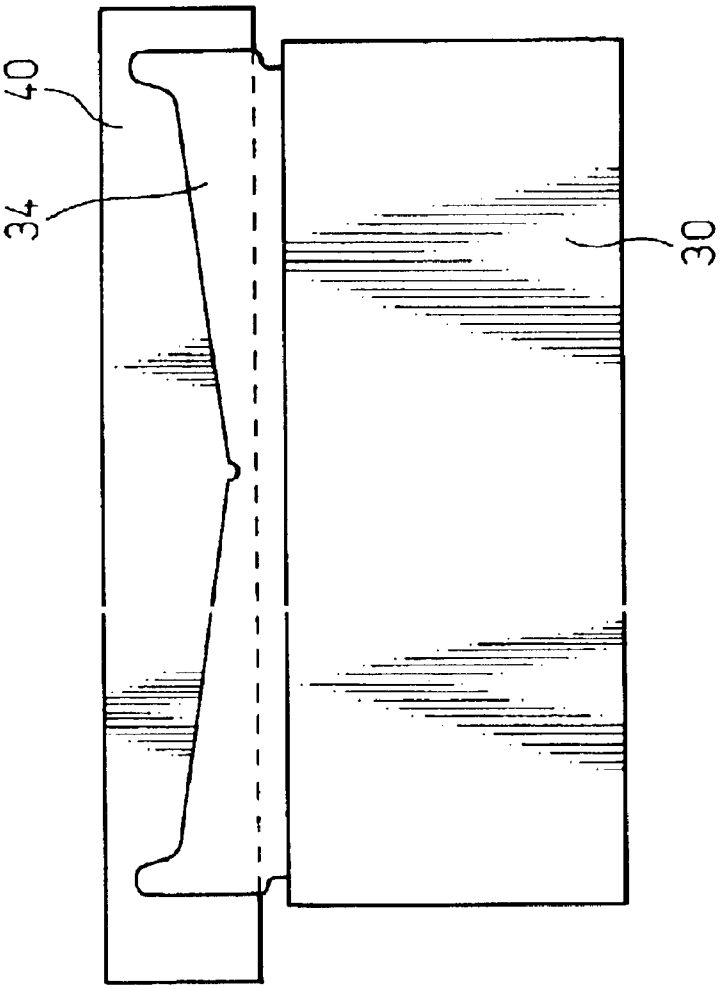

Fig.7B

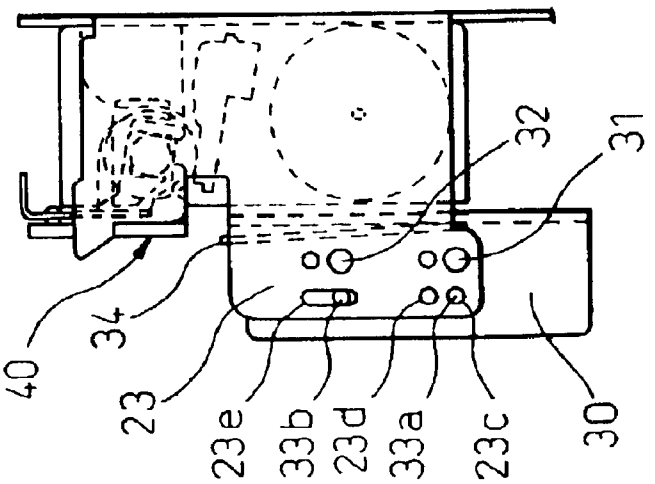

Fig.7A

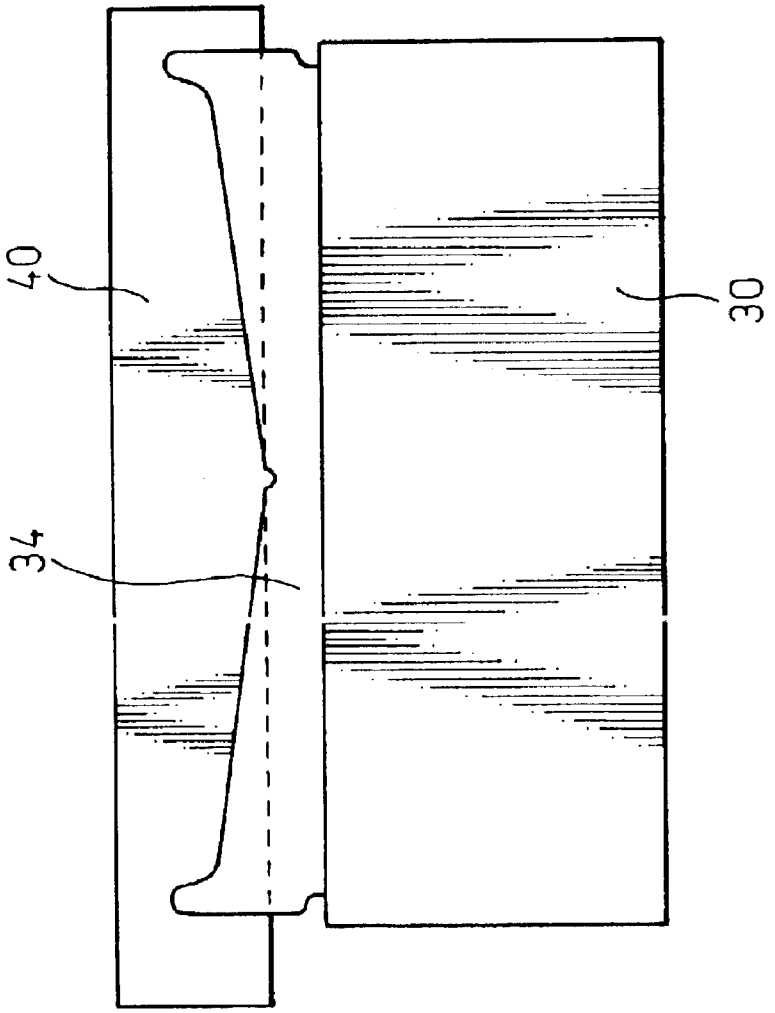

Fig.8

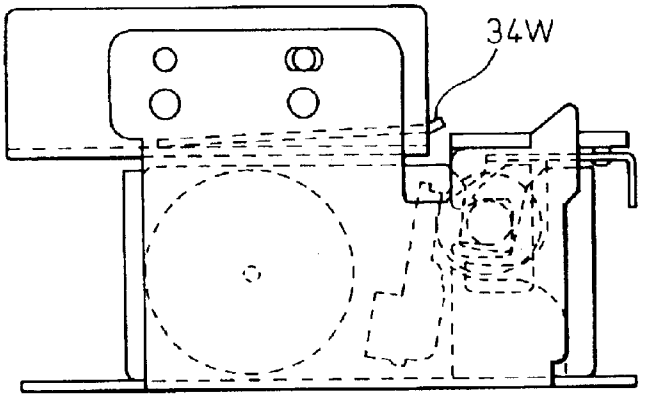

Fig.9A

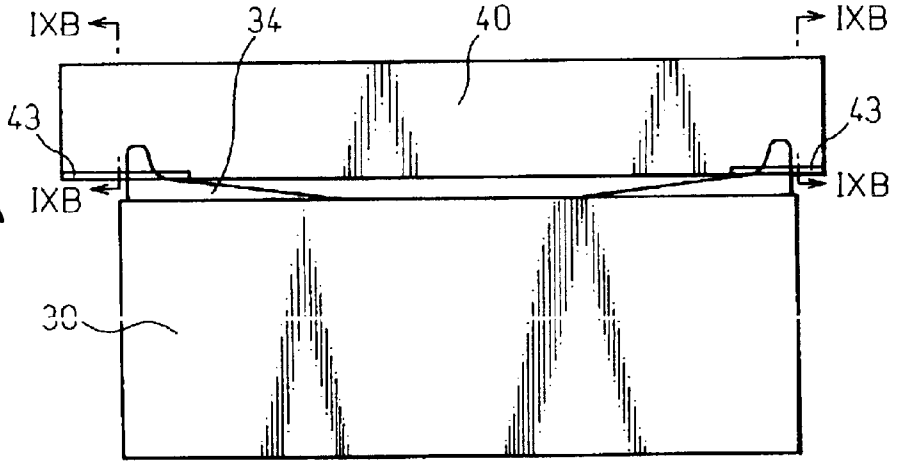

Fig.9B

Fig.10A

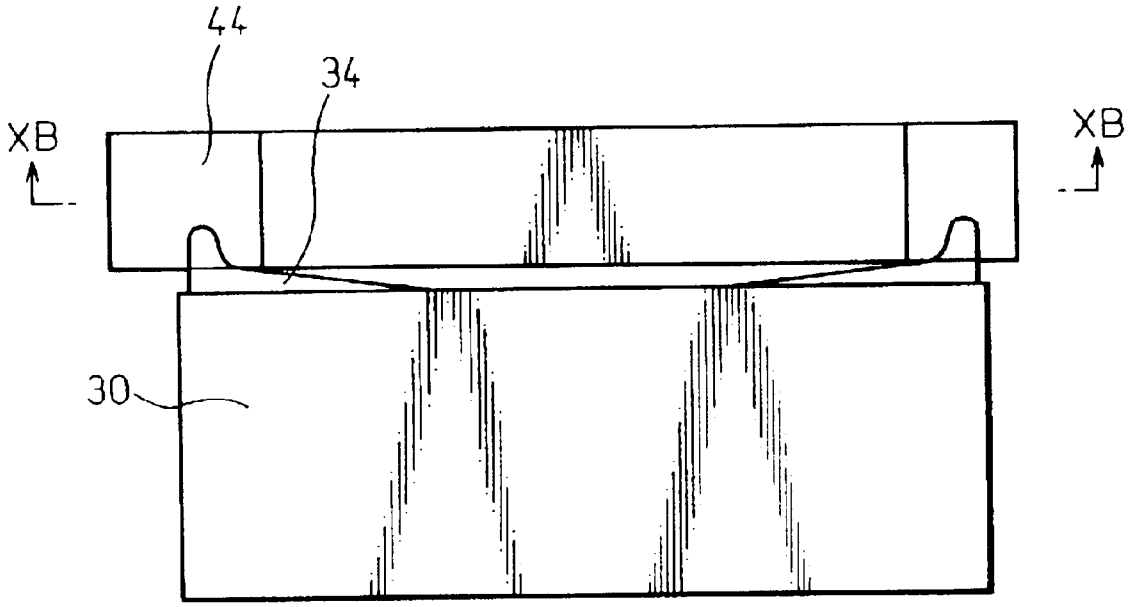

Fig.10B

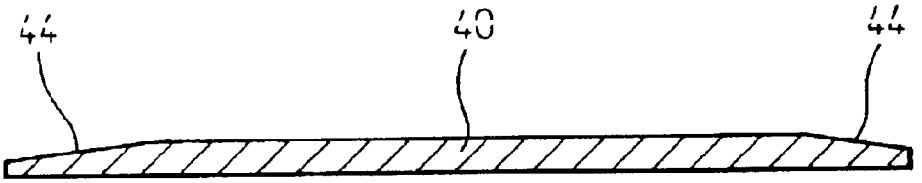

Fig.11A

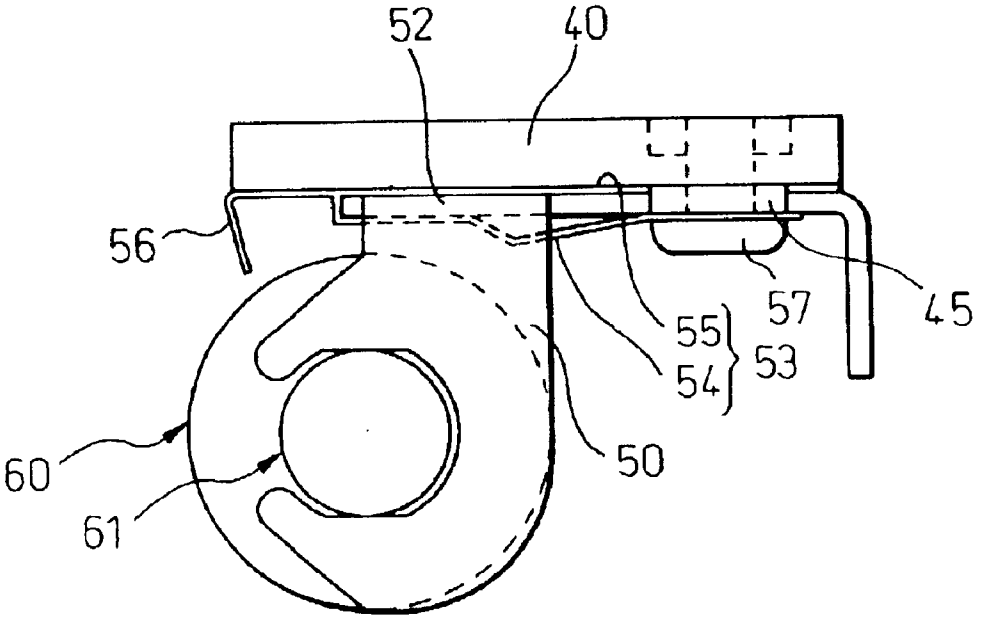

Fig.11B

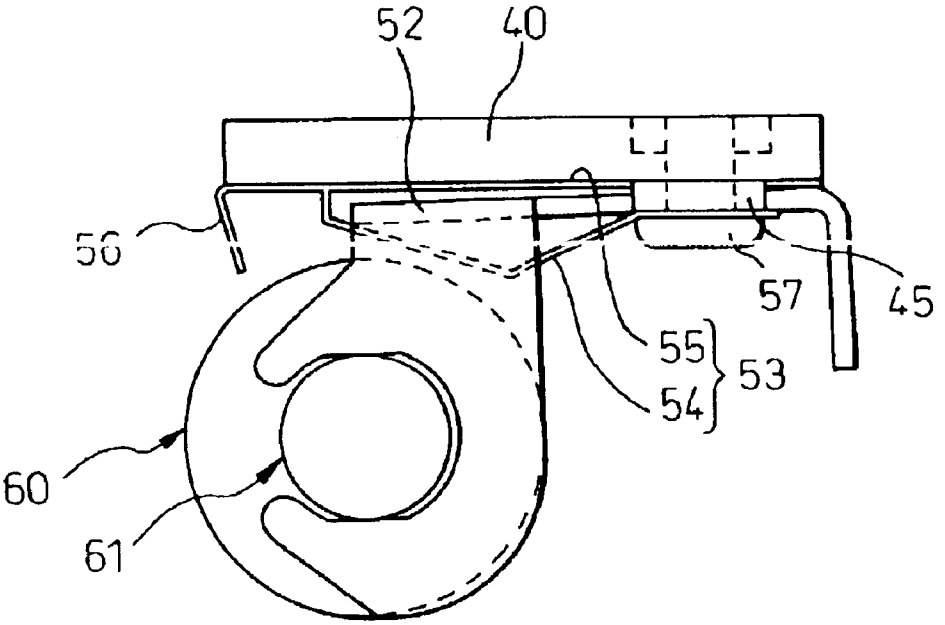

Fig.12

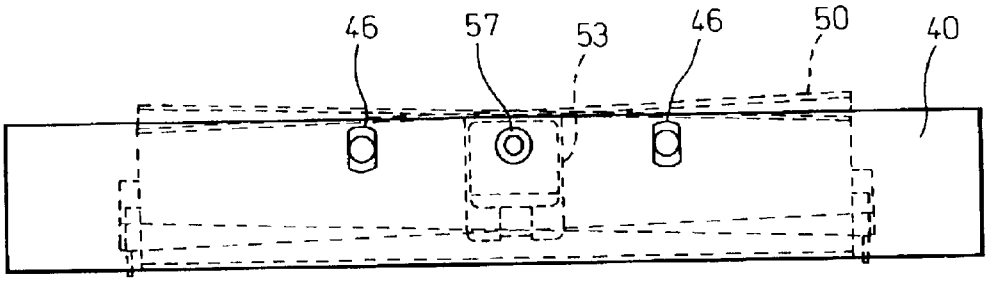

PRINTER HAVING A CUTTING APPARATUS THAT MAINTAINS A RELATIVE POSITION BETWEEN A MOVABLE CUTTER AND A REMOVABLE FIXED CUTTER

BACKGROUND OF THE INVENTION

1. Field of the Invention

The present invention relates to a printer, and relates, more particularly, to a printer that has a guillotine cutter having a movable cutter and a fixed cutter which is arranged removable.

2. Description of the Related Art

While printers are being used in a very wide range of fields, certain types of printers, particularly small printers, often use roll paper. Printers that use roll paper are equipped with a cutter for cutting the roll paper at a predetermined position. Among various types of cutters, there is a cutter called a guillotine cutter that slides a movable cutter on the surface of a fixed cutter. On the other hand, roll paper is exchanged frequently in the small printers. In order to facilitate the exchange of roll paper, or in order to clean the inside of the printer, some printers have a platen connected to the fixed cutter of the guillotine cutter, and these units can be integrally removed.

In a guillotine cutter, it is difficult to well cut paper when the position of the moving line of the movable cutter relative to the fixed cutter is deviated. When the fixed cutter is removable, a deviation in the position of the moving line of the movable cutter relative to the fixed cutter possibly occurs. As a result, there arises a problem that it is not possible to obtain a satisfactory cutting action.

SUMMARY OF THE INVENTION

The present invention has been made in the light of the above problems. It is, therefore, an object of the invention to provide a printer that has a guillotine cutter having a fixed cutter and a movable cutter, and the fixed cutter is removable, and that has no variation in the relative position between the fixed cutter and the movable cutter.

In order to achieve the above object, according to one aspect of the present invention, there is provided a printer comprising a guillotine cutter having a fixed cutter and a movable cutter that is movable toward the fixed cutter, wherein

the fixed cutter is provided with a platen via a platen supporting member, and is removable together with the platen,

the printer has a cutter fitting member fixed and integrally formed with a printer casing that accommodates a printer main body including a printing section, the cutter fitting member having a bottom plate and a pair of side plates erected on the bottom plate,

a movable cutter driving member that drives the movable cutter is positioned on the cutter fitting member with a movable cutter positioning unit, and

the fixed cutter is positioned on the cutter fitting member with a fixed cutter positioning unit, with the fixed cutter positioning unit formed on the upper end of the side plates of the cutter fitting member.

According to the printer having the above structure, the movable cutter and the fixed cutter of the guillotine cutter are positioned on the cutter fitting member that is integrally formed and has a bottom plate and a pair of side plates erected on the bottom plate. Therefore, the relative position is not deviated. Further, as the fixed cutter positioning unit for positioning the fixed cutter is formed on the upper end of the side plates of the cutter fitting member, the machining is easy.

According to another aspect of the invention, a platen stopper is fitted to the printer casing, and

when an shaft of the platen fitted to the fixed cutter via the platen supporting member is inserted into a guide provided on the printer casing, the platen stopper applies force to press the fixed cutter against the fixed cutter positioning unit.

According to still another aspect of the invention, a relative angle between the fixed cutter and the movable cutter is adjusted by changing the fixed cutter positioning unit or the movable cutter positioning unit.

According to still another aspect of the invention, a full cut and a partial cut are changeable by changing the position of the movable cutter driving member using the movable cutter positioning unit.

According to still another aspect of the invention, on both ends of the movable cutter in its width direction, there are provided guiding sections that first ride on the upper surface of the fixed cutter when the movable cutter moves toward the fixed cutter, and

either the fixed cutter or the movable cutter or both the fixed cutter and the movable cutter have ride smoothing units that make the guiding sections ride smoothly on the fixed cutter.

Preferably the ride smoothing unit is made by upwardly bending the guiding section to make it ride on the fixed cutter.

Preferably the ride smoothing unit is made by cutting off the width end portion of the upper edge fixed at the movable cutter side.

Preferably the ride smoothing unit is made by tapering down the both width ends of the upper surface of the fixed cutter.

According to still another aspect of the invention, the platen supporting member is fitted to the fixed cutter via a spring member, and the spring member always applies force to the platen supporting member against the fixed cutter.

According to still another aspect of the invention, a roll paper guide that prevents a jam of the roll paper is formed on the spring member.

According to still another aspect of the invention, the platen supporting member is fitted to the fixed cutter with a play.

The present invention may be more fully understood from the description of preferred embodiments of the invention set forth below, together with the accompanying drawings.

BRIEF DESCRIPTION OF THE DRAWINGS

FIG. **1** is a side view of a printer according to a first embodiment of the present invention.

FIG. **2** is an enlarged view that explains the supporting of a platen shaft according to the first embodiment.

FIG. **3** is a front view of a layout of main parts according to the first embodiment.

FIG. **4** is a side view of a printer according to a second embodiment of the present invention.

FIG. **5** is a side view of a printer according to a third embodiment of the present invention.

FIG. **6**A is a top plan view and FIG. **6**B is a side view of a printer that explain a full cut according to a fourth embodiment of the present invention.

FIG. **7**A is a top plan view and FIG. **7**B is a side view of the printer that explain a partial cut according to the fourth embodiment of the present invention.

FIG. **8** is a side view of a printer according to a fifth embodiment of the present invention.

FIG. **9**A is a top plan view and FIG. **9**B is a cross-sectional view cut along the line IXB—IXB in FIG. **9**A that explain a printer according to a sixth embodiment of the present invention.

FIG. **10**A is a top plan view and FIG. **10**B is a cross-sectional view cut along the line XB—XB in FIG. **10**A that explain a printer according to a seventh embodiment of the present invention.

FIG. **11**A and FIG. **11**B are views of a printer according to an eighth embodiment of the present invention.

FIG. **12** is a view that explains a spring section in detail according to a ninth embodiment. fixed

DETAILED DESCRIPTION OF THE PREFERRED EMBODIMENTS

Embodiments of the present invention will be explained below with reference to the attached drawings.

FIG. **1** is a side view that shows characteristics of a first embodiment of a roll paper printer having a guillotine cutter according to the present invention. A printer main body that includes a driving motor **70**, a thermal head **80**, and a roll paper guiding member **90** is installed inside a casing **10** having its upper end opened. A cutter fitting member **20** that has a U-shaped cross section, with the upper end opened, and has a bottom plate **21** and a pair of side plates **22**, is fixed to the outside of this casing **10**.

Roll paper is wound around a winding core and supported by a roll paper supporting member not shown. The roll paper passes through between a roll paper guiding member **13** and a platen **60**. Characters are printed on the roll paper when it passes through the platen **60** and the thermal head **80**. The roll paper is then directed upward, and is discharged to the upper space from between a movable cutter **34** and a fixed cutter **40** in FIG. **1**. At a desired position, the movable cutter is moved to a right direction in the drawing to cut the roll paper.

The side plates **22** of the cutter fitting member **20** have a first projection **23** and a second projection **24**. A movable cutter driving section **30** of the guillotine cutter is fixed to the first projection with screws **31** and **32**. The cutter fitting member **20** has positioning holes **23***a* and **23***b*. Small projections **33***a* and **33***b* of the movable cutter driving section **30** are engaged with the positioning holes **23***a* and **23***b*. With this arrangement, the fitting position of the movable cutter driving section **30** to the cutter fitting member **20** does not deviate.

The movable cutter driving section **30** moves the movable cutter **34** on a movable cutter guiding plate **35** with a movable cutter driving motor not shown, in a posture that the movable cutter **34** is slightly lifted at the fixed cutter side as shown in the drawing. Therefore, although not shown in the drawing, the lower portion of the inside the movable cutter driving section **30** has a free space to enable the movable cutter **34** to move through this portion. The lower portion of a wall **36** at the right side of the movable cutter driving section **30** is opened.

On the other hand, the upper end of the second projection **24** of the cutter fitting member **20** has a first side **25** that is parallel with the bottom side, and a second side **26** that is perpendicular to the first side **25**. The removable fixed cutter **40** is disposed on the second projection while being positioned with the first side **25** and the second side **26**.

More specifically, the fixed cutter **40** has a projection **41** that projects to the front and back directions in the drawing. The fixed cutter **40** is disposed such that a bottom surface **41***a* of this projection **41** is in close contact with the first side **25** of the cutter fitting member **20**, and a right end surface **41***b* of the projection **41** is in close contact with the second side **26** of the cutter fitting member **20**.

The process of disposing the fixed cutter **40** on the second projection **24** of the cutter fitting member **20** will be explained in detail below with reference to FIG. **2**.

A platen supporting member **50** is fitted on the lower surface of the fixed cutter **40**. The platen supporting member **50** has a pair of forked arms **51** that extend downward. These forked arms **51** support an shaft **61** of the platen **60**.

The shaft **61** of the platen **60** extends to the outside of the platen supporting member **50**. The platen stopper **13** having approximately a U-shape with the left side opened is clockwise rotatably fitted to the side walls **11** of the casing **10** at the supporting point **12**. A recess **14** having an approximately a U-shape that is opened from the top end of the side walls **11** of the casing **10**. The portion of the shaft **61** extended to the outside is inserted into the recess **14**, while pressing the upper arm **13***a* of the platen stopper **13** aside.

The platen stopper **13** is always applied with force from the spring unit not shown so that the platen stopper **13** returns to the position shown in the drawing. Therefore, when the shaft **61** of the platen **60** has been inserted into the U-shaped recess **14**, the platen stopper **13** returns to the position shown in the drawing, and the upper arm **13***a* presses the shaft **61** of the platen **60** to the right downward direction in the drawing. With this arrangement, the fixed cutter **40** that is connected with the shaft **61** of the platen **60** via the platen supporting member **50** is disposed as follows. The bottom surface **41***a* of the projection **41** is in close contact with the first side **25** of the cutter fitting member **20**, and the right end surface **41***b* of the projection **41** is in close contact with the second side **26** of the cutter fitting member **20**.

When the shaft **61** of the platen **60** is brought into contact with a bottom surface **14***a* of the U-shaped recess **14**, there is the following possibility. The bottom surface **41***a* of the projection **41** of the fixed cutter **40** connected to the shaft **61** of the platen **60** via the platen supporting member **50** will be lifted, without being brought into contact with the first side **25** of the second projection **24** of the cutter fitting member **20**. Therefore, a cut depth of the recess **14** is determined such that a gap d exists between the bottom **14***a* of the U-shaped recess **14** and the shaft **61** of the platen **60** when the shaft **61** of the platen **60** is disposed within the U-shaped recess **14**.

FIG. **3** is a view that shows a positional relationship between the casing **10**, the platen stopper **13**, the cutter fitting member **20**, the fixed cutter **40**, the platen supporting member **50**, and the platen **60** that are observed from a direction of an arrow mark III in FIG. **2**. In order to avoid complexity in the drawing, other portions are omitted from the drawing.

As explained above, according to the first embodiment, the movable cutter driving section **30** is fixed to the cutter fitting member **20**, and the movable cutter **34** moves on a moving line prescribed by the cutter fitting member **20**. The fixed cutter **40** is not fixed to the first projection **23** of the cutter fitting member **20** with screws, but is positioned with the first side **25** and the second side **26** of the second projection **24** of the cutter fitting member **20**. Therefore, the

moving line of the movable cutter **34** and the fixed cutter **40** are held steady by the cutter fitting member **20**. As a result, no variation occurs in the relative position between the movable cutter **34** and the fixed cutter **40**.

According to the guillotine cutter, the lower edge of the V-shaped front end of the movable cutter cuts roll paper when this V-shaped front end moves in contact with the upper edge of the front end of the fixed cutter. Therefore, it is important that a relative angle between the movable cutter and the fixed cutter is set to an optimum value.

Therefore, by a second embodiment shown in FIG. **4**, fitting of a movable cutter driving member **30** is kept constant, and a relative angle between a movable cutter and a fixed cutter is set to an optimum value as follows. An angle of a first side **25** of a second projection **24** of a cutter fitting member **20** is selected, and a second side **26** is set to form a right angle with the first side **25**. An upper surface **40***a* of a fixed cutter **40** is parallel with a lower surface **41***a* of a projection **41** of the fixed cutter **40**. A lower surface of the fixed cutter **40** is on the same plane as the lower surface **41***a* of the projection **41** of the fixed cutter **40** (refer to FIG. **2**).

On the other hand, by a third embodiment shown in FIG. **5**, an angle of a first side **25** of a second projection **24** of a cutter fitting member **20** is kept constant. For example, the first side **25** is set parallel with a bottom plate **21** of the cutter fitting member **20**, and positions of positioning holes **23***a* and **23***b* of the cutter fitting member **20** for fitting a movable cutter driving member **30** are adjusted.

Next, a fourth embodiment will be explained. In the fourth embodiment, the fitting position of the movable cutter driving member **30** of the first embodiment is set close to or far from the fixed cutter **40**, to prepare for a full cut (a complete cutting) and a partial cut (a cutting leaving a small part not cut). FIG. **6**A is a top plan view and FIG. **6**B is a side view of a maximum projection position of a movable cutter **34** when a full cut is carried out.

As shown in FIG. **6**B, two positioning holes **23***c* and **23***d* corresponding to the positioning hole **23***a* of the first embodiment are provided in advance on a first projection **23** of a cutter fitting member **20**. Further, a positioning hole **23***e* corresponding to the positioning hole **23***b* of the first embodiment is provided in advance on the first projection **23** of a cutter fitting member **20**. The positioning hole **23***e* is formed as an ellipse having a larger size than a connected size of the positioning holes **23***c* and **23***d*. Four screw holes for screws **31** and **32** are provided in the same intervals as the interval between the positioning holes **23***c* and **23***d*. Small projections **33***a* and **33***b* and screw stopping holes that are the same as those of the first embodiment are provided on a movable cutter driving member **30**.

The small projections **33***a* and **33***b* provided on the movable cutter driving member **30** are engaged with the positioning holes **23***d* and **23***e*. The screws **31** and **32** pass through the screw piercing holes closer to a fixed cutter **40**, and the movable cutter driving member **30** is fitted to the cutter fitting member **20**.

FIG. **7**A is a top plan view and FIG. **7**B is a side view that show a maximum projection position of the movable cutter **34** when a partial cut (leaving a small part not cut at the center) is carried out. The small projections **33***a* and **33***b* provided on the movable cutter driving member **30** are engaged with the positioning holes **23***c* and **23***e*. The screws **31** and **32** are passed through the screw piercing holes farther from the fixed cutter **40**, and the movable cutter driving member **30** is fitted to the cutter fitting member **20**. In the fourth embodiment, it is possible to change over easily between the full cut and the partial cut, based on the above arrangement.

FIG. **8** is a view that explains a fifth embodiment. In the sixth embodiment, end portions **34***w* in the width direction of the movable cutter **34**, that are first brought into contact with the fixed cutter **40** at the cutting time, are bent upward on the fixed cutter side. With this arrangement, the ride of the movable cutter **34** on the fixed cutter **40** at the beginning of moving e becomes smooth.

FIG. **9**A and FIG. **9**B are views that explain a sixth embodiment. In the sixth embodiment, cutouts **43** are made at both ends in width direction (portions that do not carry out a cut operation) of the upper edge at the movable cutter side of the fixed cutter **40**. With this arrangement, the ride of the movable cutter **34** on the fixed cutter **40** at the beginning of moving becomes smooth, in a similar manner to that in the fifth embodiment.

FIG. **10**A and FIG. **10**B are views that explain a seventh embodiment. In the seventh embodiment, tapers **44** which is tapering downward and outward are formed at both ends in width direction (portions that do not carry out a cut operation) of the fixed cutter **40**. With this arrangement, the ride of the movable cutter **34** on the fixed cutter **40** at the beginning of the moving becomes smooth, in a similar manner to that in the fifth and sixth embodiments.

An eighth embodiment will be explained next. In the eighth embodiment, a platen supporting member **50** is fitted to a fixed cutter **40** via a spring member.

FIG. **11**A and FIG. **11**B are views that explain a structure and operation of a printer of the eighth embodiment. Referring to FIG. **11**A, a spring member **53** is formed with spring steel, and is disposed at a center in the width direction of a fixed cutter **40**. The spring member **53** has a lower spring portion **54** and an upper spring portion **55**. The lower spring portion **54** is fixed to a lower projection **45** provided on the fixed cutter **40** with a screw **57**. An upper surface **52** of a platen supporting member **50** is positioned between the lower spring portion **54** and the upper spring portion **55**. All of the upper spring portion **55** is closely contacted to the lower surface of the fixed cutter.

The lower spring portion **54** protrudes downward in the movable cutter side from the screw stopping section, and always applies force to the upper surface **52** of the platen supporting member **50** toward the fixed cutter **40**. When an shaft **61** of a platen **60** is pressed downward with a platen stopper **13** (refer to FIG. **2**), the upper surface **52** of the platen supporting member **50** is also pressed downward as shown in FIG. **11**B. As a result, the lower spring portion **54** of the spring member **53** that protrudes downward at the movable cutter side from the screw stopping section is lowered. Then, the lower spring portion **54** tries to return to the state shown in FIG. **11**A. Consequently, a downward force is applied to the fixed cutter **40**. A projection **41** (refer to FIG. **2**) of the fixed cutter **40** applied with the downward force is brought into contact with a first side **25** of a second projection **24** of a cutter fitting member **20**, and is positioned.

The upper spring **55** of the spring member **53** is bent downward at the end of the movable cutter side, and forms a roll paper guide **56** that prevents a jam of the roll paper.

According to the eighth embodiment having the above structure, it becomes possible to position the fixed cutter **40** more securely.

FIG. **12** is a view that explains a ninth embodiment. In the ninth embodiment, in a structure of fitting a platen supporting member to a fixed cutter **40** with a spring member **53**, like in the eighth embodiment, positioning holes **46** are provided on the fixed cutter **40** in the form of elliptical holes.

It is possible to fit a platen **60** to the fixed cutter **40** in non-parallel arrangement, by enabling a rotation and parallel movement of the platen **60**. With this arrangement, it is possible to fit the platen **60** in parallel with a thermal head **80**, even when a thermal printer including the thermal head **80** is not parallel with the fixed cutter **40**.

While the first to ninth embodiments of the present have been explained above, it is also possible to suitably combine these embodiments.

As explained above, according to the present invention, the printer comprises a guillotine cutter having a fixed cutter and a movable cutter that is movable toward the fixed cutter. A platen is fitted to the fixed cutter via a platen supporting member, with the fixed cutter set removable together with the platen. The printer has a cutter fitting member fixed and integrally formed with a printer casing that accommodates a printer main body including a printing section. The cutter fitting member has a bottom plate and a pair of side plates erected on the bottom plate. A movable cutter driving member that drives the movable cutter is positioned on the cutter fitting member with a movable cutter positioning unit. The fixed cutter is positioned on the cutter fitting member with a fixed cutter positioning unit, and the fixed cutter positioning unit is formed on the upper end of the side plates of the cutter fitting member. According to the printer having the above structure, the movable cutter and the fixed cutter of the guillotine cutter are positioned on the cutter fitting member that is integrally formed and has a bottom plate and a pair of side plates erected on the bottom plate. Therefore, a relative position is not deviated. Further, as the fixed cutter is formed on the upper end of the side plates of the cutter fitting member, it is easy to carry out the processing. It is also possible to use a conventional printer casing.

Further, as the structure is easy for machining, it becomes easy to change a relative position and relative angle of the fixed cutter and the movable cutter. It is also easy to change between a partial cut and a full cut.

What is claimed is:

1. A printer with a guillotine cutter having a fixed cutter and a movable cutter that is movable toward the fixed cutter, comprising:

a cutter fitting member fixed and integrally formed with a printer casing that accommodates a printer main body having a printing section, the cutter fitting member having a bottom plate and a pair of side plates erected on the bottom plate;

a movable cutter driving member that drives the movable cutter and is positioned on the cutter fitting member with a movable cutter positioning unit;

a fixed cutter positioning unit to position the fixed cutter on the cutter fitting member, the fixed cutter positioning unit being formed on upper ends of the side plates of the cutter fitting member; and

a platen supporting member provided with the fixed cutter to support a platen, the fixed cutter being removable from the cutter fitting member together with the platen supporting member.

2. The printer according to claim **1**, further comprising:

a platen stopper fitted to the printer casing; and

a guide provided on the printer casing,

wherein when a shaft of the platen, fitted to the fixed cutter via the platen supporting member, is positioned in the guide provided on the printer casing, the platen stopper applies force to press the fixed cutter against the fixed cutter positioning unit.

3. The printer according to claim **1**, wherein

a full cut and a partial cut are selectable by changing the position of the movable cutter drive member using the movable cutter positioning unit.

4. A printer comprising a guillotine cutter having a fixed cutter and a movable cutter that is movable toward the fixed cutter, wherein

the fixed cutter is provided with a platen via a platen supporting member, and is removable together with the platen,

the printer has a cutter fitting member fixed and integrally formed with a printer casing that accommodates a printer main body including a printing section, the cutter fitting member having a bottom plate and a pair of side plates erected on the bottom plate,

a movable cutter driving member that drives the movable cutter is positioned on the cutter fitting member with a movable cutter positioning unit,

the fixed cutter is positioned on the cutter fitting member with a fixed cutter positioning unit, with the fixed cutter positioning unit formed on the upper end of the side plates of the cutter fitting member, and

the platen supporting member is fitted to the fixed cutter via a spring member, and the spring member always applies force to the platen supporting member against the fixed cutter.

5. The printer according to claim **4**, wherein

a roll paper guide formed on the spring member to prevent paper jams.

6. The printer according to claim **1**, wherein

the platen supporting member is loosely fitted to the fixed cutter.

7. A printer with a printer casing, a fixed cutter, and a movable cutter that is movable toward the fixed cutter, comprising:

a cutter fitting member fixed and integrally formed with the printer casing, the cutter fitting member having a bottom plate and a pair of side plates erected on the bottom plate, with the fixed cutter being positioned between the side plates of the cutter fitting member;

a movable cutter driving member driving the movable cutter and being positioned on the cutter fitting member; and

a platen supporting member provided with the fixed cutter to support a platen, the fixed cutter being removable from the cutter fitting member together with the platen supporting member.

* * * * *