March 24, 1936. F. C. BIGGERT, JR 2,034,939

ROLLING MILL SCREWDOWN

Filed May 16, 1935

Fig. 3.

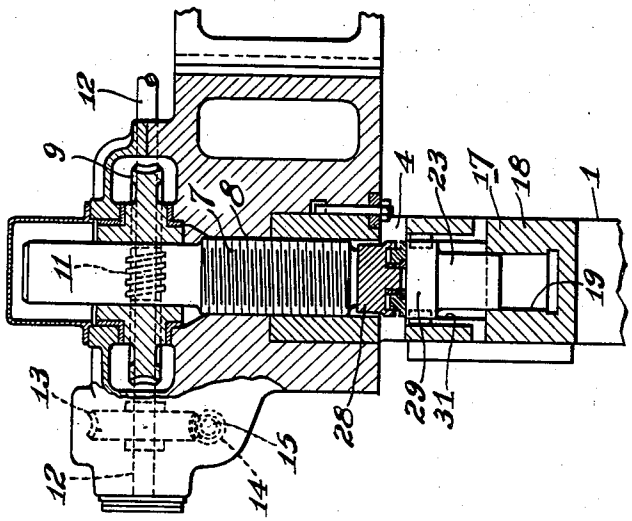

Fig. 2.

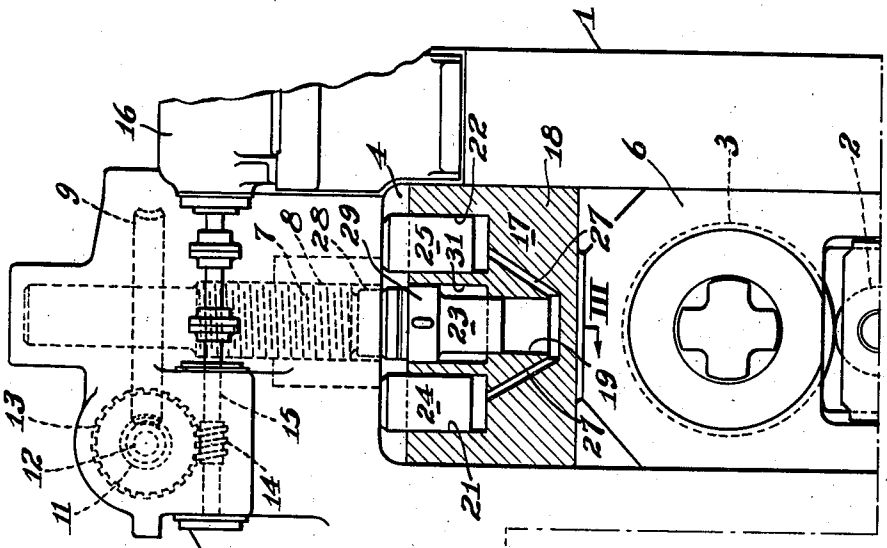

Fig. 1.

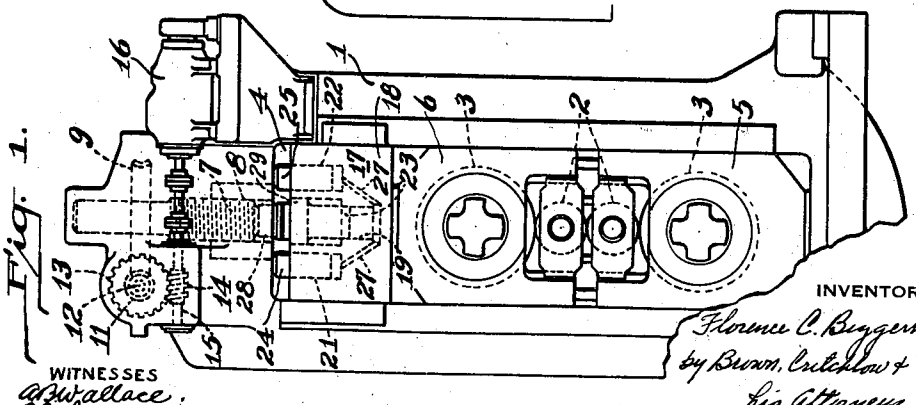

INVENTOR

Florence C. Biggert Jr

by Brown, Critchlow & Flick

his Attorneys

WITNESSES

A. J. Wallace.

J. E. Dickmann

Patented Mar. 24, 1936 2,034,939

UNITED STATES PATENT OFFICE

2,034,939

ROLLING MILL SCREWDOWN

Florence C. Biggert, Jr., Crafton, Pa., assignor to United Engineering & Foundry Company, Pittsburgh, Pa., a corporation of Pennsylvania

Application May 16, 1935, Serial No. 21,830

14 Claims. (Cl. 80—56)

This invention relates to rolling mills and more particularly to a screw-down type of roll-adjusting mechanism.

Rolling mill screw-downs as heretofore constructed, while capable of performing their necessary functional requirements quite satisfactorily, incorporate several disadvantages which are very undesirable. The most important of these are that such screw-downs are highly inefficient and cumbersome and expensive to install and operate. This is particularly true in mills where the rolls have to be adjusted while the material being rolled is engaged in the mill. As a rule the effective work developed from the power input to the screws in such mills runs as low as ½ of 1 per cent. This is due to the great frictional resistance in the screw threads and in the worm gearing which is used in order to obtain the desired ratio between the speed of the driving motor and the speed of the screws.

With the foregoing in mind, it is an object of this invention to provide a screw-down which is lighter in weight and less expensive to install, and considerably more efficient and cheaper to operate than the prior screw-downs.

A more particular object is to provide a screw-down in which a hydraulic booster is employed which is directly responsive to the screw-down proper.

These and various other objects as well as the various other novel features and advantages of the invention will be apparent when the following detailed description is read in conjunction with the accompanying drawing of which Fig. 1 is an end elevation of a 4-high type rolling mill embodying the invention; Fig. 2 a view similar to Fig. 1 showing the screw-down on an enlarged scale and the support for the booster unit in section; and Fig. 3 a sectional view taken on the line III—III of Fig. 2.

Referring in detail to the embodiment of the invention illustrated in this drawing, the numeral 1 designates a roll housing and the numerals 2 and 3 the working and backing rolls respectively of a common form of 4-high mill. The necks of these rolls are mounted in the usual fashion in a window 4 of the housing, the lower backing roll being disposed in a stationary lower chuck 5 and the upper in a vertically adjustable upper chuck 6. For adjusting the latter a common type of adjusting screw 7 is employed, being threadably engaged in a threaded bore 8 extending vertically through the top of the housing. The upper end of this screw is equipped with a slidably mounted worm wheel 9 which is meshed with a worm 11 mounted on a shaft 12 suitably supported on the housing 1 and equipped with a driving worm wheel 13. The latter is in turn meshed with a worm 14 secured to the drive shaft 15 of a driving motor 16.

To increase the effectiveness of the screw-down in accordance with this invention and thereby reduce the size of the screw-down equipment required, as well as its operating cost, a hydraulic booster 17 is provided which is mounted in the housing window 4 at the top of the upper backing roll chuck 6. This booster as illustrated comprises a cylinder block 18 having a plurality of cylinders in its upper end which may vary in size and number, but in the present instance consists of three equal-sized cylinders 19, 21 and 22 in which there are arranged three operating plungers 23, 24 and 25, respectively. The centermost of these cylinders, which constitutes the master cylinder, is arranged in axial alignment with the screw 7, and its plunger 23 is adapted to be operated thereby to supply the other cylinders with operating pressure. To so function, the cylinders are all filled with an operating liquid such as oil and the lower end of the master cylinder is connected to the booster cylinders 21 and 22 by suitable ducts 27. The plungers 24 and 25 in the latter cylinders in order to transmit a pressure to the upper roll chuck 6 are disposed to engage the top of the housing window 4.

Between the lower end of the screw 7 and the top of the master plunger 23 there is provided a spacer block 28, and to permit the proper movement of the master plunger 23 which operates in the opposite direction to the booster plungers 24 and 25, the master cylinder 19 is extended into the block 18 below the others cylinders. In addition the master plunger 23 is provided with an enlarged upper end 29 which functions as a guide and moves in an enlarged bore 31 at the upper end of the master cylinder bore 19.

Through the use of such an arrangement, as will be apparent, when the screw 7 is operated downwardly it causes the plunger 23 to exert a pressure on the liquid in the master cylinder 19 which is in turn communicated to the booster cylinders 21 and 22 by way of the ducts 27. The result of this is that a pressure is exerted upon the upper roll chuck 6 through the cylinder block 18 which is equal to the force exerted on the master plunger 23 by the screw 7 plus a force exerted by the booster plungers 24 and 25 which is equal to the force on the master plunger times the ratio of the cross-sectional area of the booster cylinders to the master cylinder. In the

embodiment illustrated the three booster cylinders are all of equal size and accordingly the total force delivered to the upper roll chuck 6 is equal to three times the force exerted by the screw 7. Consequently, with such an installation, while the screw must be operated three times as far as in an ordinary screw-down, the screw-operating mechanism needs to be only one-third as powerful as it does in the prior screw-downs where no booster arrangement is employed.

In addition this arrangement embodies the further advantage over the old arrangements in that it distributes the force applied to the chuck 6 more uniformly over both the top member of the housing and the chuck. As a result the beam or lever action which occurs when the pressure is all concentrated at one point is greatly reduced as is the distortion produced thereby which in the prior constructions requires additional material to counteract it.

While, as previously stated, the number of the cylinders in the booster may be varied as well as their diameters, it will be appreciated that the stroke of the screw and the multiplication of pressure in the booster will vary with the ratios of the cross-sectional area of the booster cylinders to the master cylinder and that the length of the housing window will be determined by the required movement of the screw. It is for this reason and to balance the construction that three equal-sized cylinders are recommended. It will also be obvious that the booster cylinders may be formed in the upper roll chuck itself.

According to the provisions of the patent statutes, I have explained the principle and mode of operation of my invention and have illustrated and described what I now consider to represent its best embodiment. However, I desire to have it understood that, within the scope of the appended claims, the invention may be practiced otherwise than as specifically illustrated and described.

I claim:

1. In a rolling mill, a power-driven screw for adjusting the mill rolls, and a hydraulic booster for assisting said screw in applying a pressure to the rolls.

2. In a rolling mill, a power-driven screw for adjusting the mill rolls, and a hydraulic booster operated by said screw for increasing the pressure applied to the rolls.

3. In a rolling mill, a roll housing, an upper roll-neck supporting chuck mounted in a window in said housing, a hydraulic booster in the top of said window, a master plunger mounted in a master cylinder in said booster, a plunger mounted in a booster cylinder also located in said booster to engage the top of said window, a power-operated screw located in the top of said housing and disposed to operate said master plunger, an operating fluid in said cylinders, and means connecting said cylinders together.

4. In a rolling mill, a roll housing, an upper roll-neck supporting chuck mounted for vertical adjustment in a window in said housing, a cylinder block mounted in said window above said block, a power-driven screw mounted in the top of said housing for adjusting said chuck, a master cylinder located in said block below said screw, a master plunger mounted in said master cylinder for operation by said screw, a booster cylinder mounted in said block, a booster plunger mounted with one end in said booster cylinder and the other engaging the top of said window, a supply of fluid in said cylinders, and means connecting said cylinders together.

5. In a rolling mill, a roll housing, an upper roll neck supporting chuck mounted in a window in said housing, a power-driven screw mounted in the top of said housing for adjusting said chuck, a cylinder block mounted on top of said chuck, a master cylinder in said block, a master plunger provided in said cylinder and arranged to be operated by said screw, a plurality of booster cylinders in said block communicating with said master cylinder, booster plungers arranged in said booster cylinders with their outer ends engaging the top of said window, and a supply of fluid in said cylinders.

6. In a rolling mill, a roll housing, a roll neck supporting chuck mounted for vertical adjustment in a window in said housing, a power-driven screw mounted in said housing for adjusting said chuck, a cylinder block mounted on top of said chuck, a master cylinder in the top of said block, a pair of booster cylinders at opposite sides of said master cylinder, a master plunger disposed in said master cylinder for operation by said screw, a pair of booster plungers mounted in said booster cylinder and disposed to engage the top of said window, a supply of liquid in said cylinders, and means connecting said cylinders together.

7. A screw-down according to claim 5 in which the master and booster cylinders are of equal diameter.

8. In a rolling mill, a roll housing, a roll neck supporting chuck mounted in a window in said housing, a power-driven screw for adjusting said chuck mounted in the end of said housing, a cylinder block mounted on top of said chuck in said window, a booster cylinder in the top of said block, a booster plunger mounted in said cylinder with its upper end engaging the end of said window, a master cylinder located in said block with its closed end projecting thereinto beyond the end of said booster cylinder, a master plunger provided with an enlarged outer end mounted in said master cylinder with its enlarged outer end engaged in an enlargement of said cylinder and disposed for operation by said screw, a supply of liquid in said cylinders, and means connecting their closed ends together.

9. In a rolling mill, a roll adjusting screw, a roll-neck supporting chuck, and a hydraulic booster system disposed for operation between said screw and chuck.

10. In a rolling mill, a roll housing, a roll-adjusting screw mounted in said housing, a roll-neck supporting chuck mounted in a window in said housing, and a hydraulic booster system operative between said screw and chuck.

11. In a rolling mill, a roll adjusting screw, a roll-neck supporting chuck, and a hydraulic booster disposed for operation by the thrust of said screw and effective for increasing the pressure exerted by the screw on the chuck.

12. In a rolling-mill, a roll-housing, a roll-neck supporting chuck mounted in a window in said housing, a hydraulic booster in said window, a master plunger mounted in a master cylinder in said booster, a plunger mounted in a booster cylinder also located in said booster to engage an end of said window, a power-operated screw located in said housing and disposed to operate said master plunger, an operating fluid in said cylinders, and means connecting said cylinders together.

13. In a rolling-mill, a roll-housing, a roll-neck

supporting chuck mounted in a window in said housing, a power-driven screw mounted in said housing for adjusting said chuck, a master plunger arranged in a cooperating master cylinder between said screw and chuck and disposed for operation by said screw, one or more auxiliary cylinders communicating with said master cylinder and a plunger in each of said auxiliary cylinders disposed to transmit to said chuck the force communicated to the auxiliary cylinders in which said plungers are located by said master plunger.

14. In a rolling-mill, a roll-housing, a roll-neck supporting chuck mounted in a window in said housing, a pressure block disposed between said chuck and the adjacent end of the window in said housing, a power-driven roll-adjusting screw disposed in said housing opposite the center of said pressure block, a master cylinder in said pressure block opposite said screw, a master plunger disposed in said master cylinder for operation by said screw, a pair of auxilary cylinders disposed at opposite sides of said master cylinder and communicating therewith, and a pair of auxiliary plungers disposed to fit in said auxiliary cylinders and engage the adjacent end of the housing window.

FLORENCE C. BIGGERT, JR.