Dec. 8, 1931. V. G. APPLE 1,834,925

METHOD OF MAKING ARMATURE COILS

Filed Oct. 26, 1928 2 Sheets-Sheet 1

Fig. 3.



Fig. 4.



Fig. 2. Fig. 5.

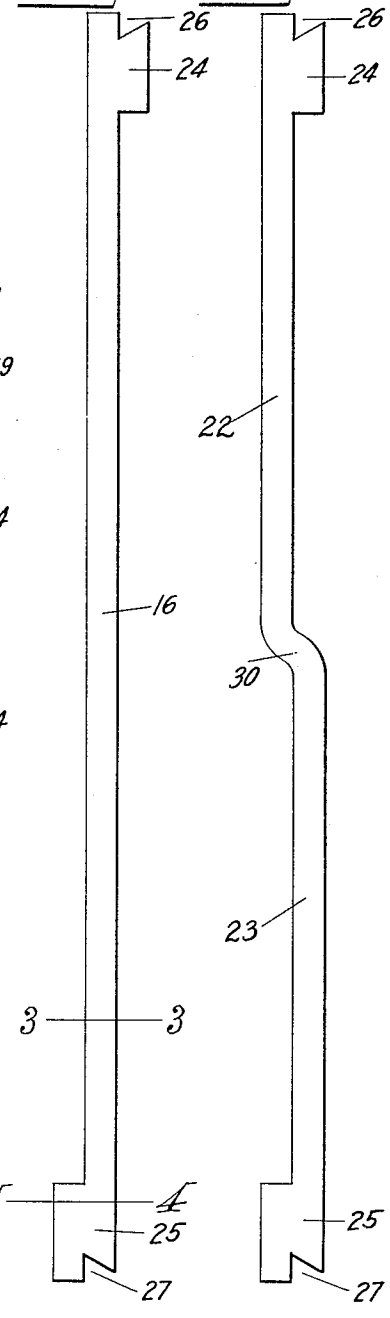

Fig. 1.

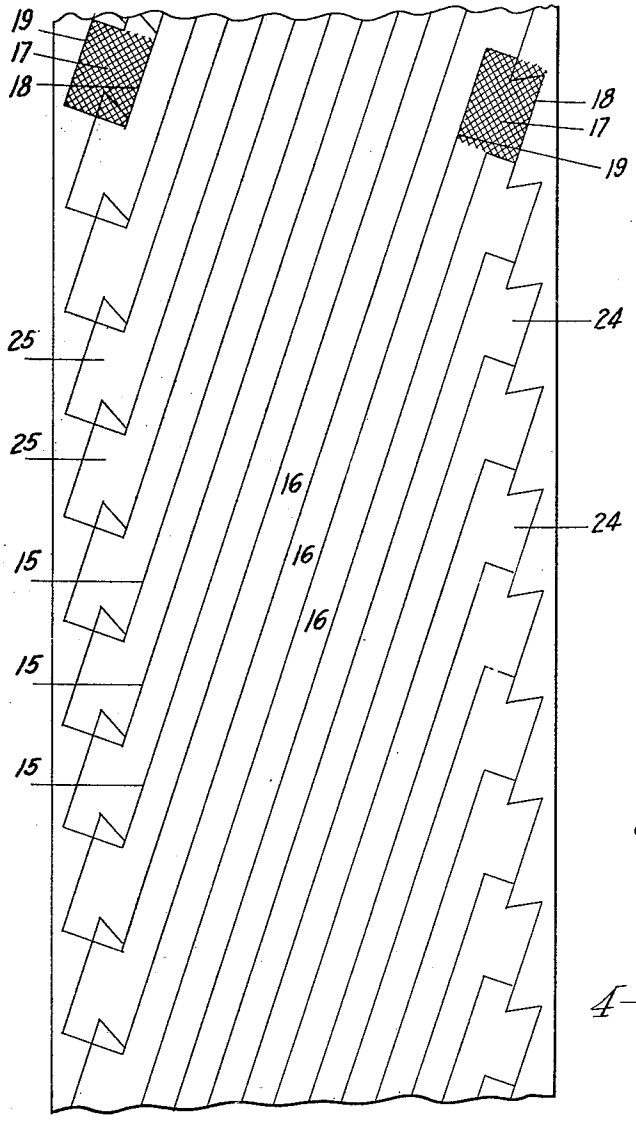

INVENTOR.

Vincent G. Apple

Dec. 8, 1931. V. G. APPLE 1,834,925

METHOD OF MAKING ARMATURE COILS

Filed Oct. 26, 1928 2 Sheets-Sheet 2

Fig. 6.

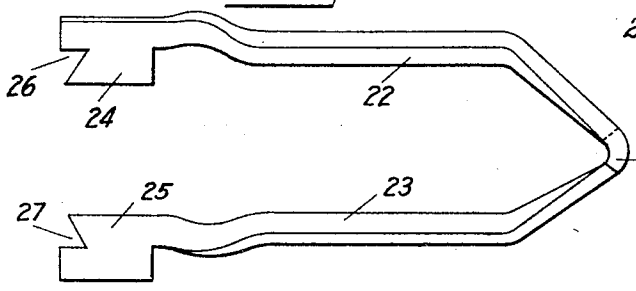

Fig. 7.

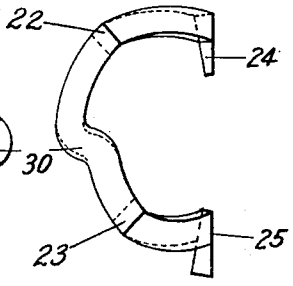

Fig. 8.

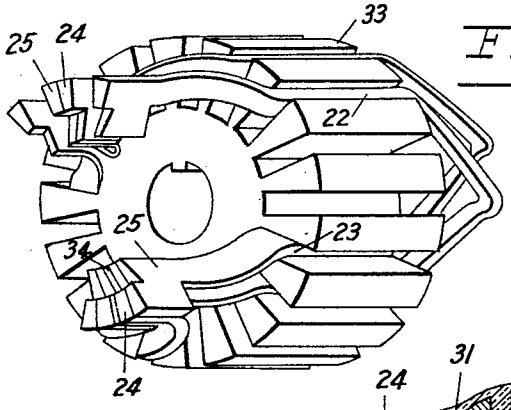

Fig. 9.

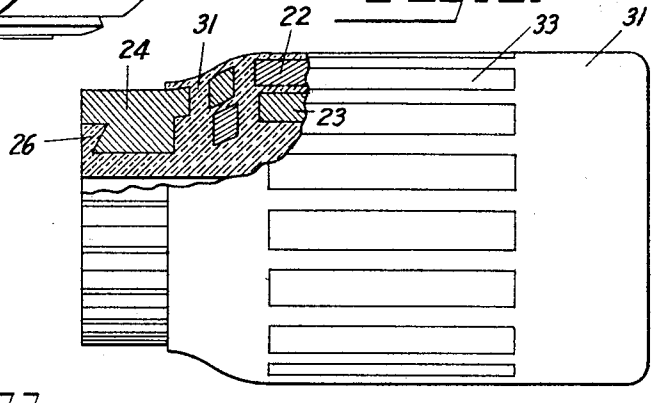

Fig. 11.

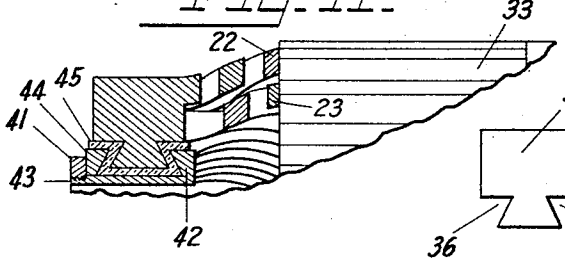

Fig. 10.

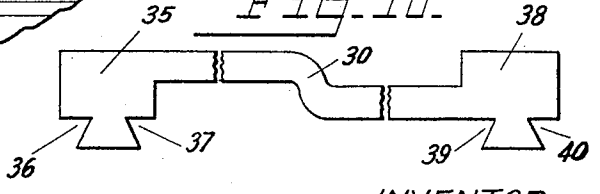

INVENTOR.

Vincent G. Apple

Patented Dec. 8, 1931 1,834,925

UNITED STATES PATENT OFFICE

VINCENT G. APPLE, OF DAYTON, OHIO

METHOD OF MAKING ARMATURE COILS

Application filed October 26, 1928. Serial No. 315,341.

This invention is shown, tho not claimed in my co-pending application Serial Number 234,158 and relates to bar wound armature coils suitable for radial entry into open core slots, the open ends of the loops being somewhat prolonged and so located relative to the remainder of the bar that commutator segments may be composed of pairs thereof.

An object of the invention is to reduce the cost of an armature by eliminating the separately made commutator, thereby reducing the number of parts and the amount of labor and material required.

Another object is to improve the electric circuit thru an armature by eliminating the soldered, brazed or welded joints commonly made to connect the bars of the winding to the commutator segments.

Further objects will be apparent from a consideration of the following description, reference being had to the drawings wherein—

Fig. 1 shows how blanks for the winding units may be cut from sheet stock.

Fig. 2 is a blank as it appears when cut as in Fig. 1.

Fig. 3 is a cross section taken at 3—3 Fig. 2.

Fig. 4 is a cross section taken at 4—4 Fig. 2.

Fig. 5 shows how blanks Fig. 2 are offset.

Fig. 6 shows how blanks Fig. 5 are folded.

Fig. 7 is an end view of Fig. 6.

Fig. 8 shows several loops Fig. 6 assembled in a core.

Fig. 9 shows a complete armature partly in section.

Fig. 10 shows how the commutator lugs are formed when a conventional commutator binding means is employed.

Fig. 11 shows a conventional commutator binding means applied to loops made according to my invention.

Similar numerals refer to similar parts thruout the several views.

Heretofore bar wound armatures of the open slot type have usually been made by providing loops of bar stock or wire and radially entering these loops into the open core slots, then providing a separate commutator and joining the open ends of the loops to bars of the commutator by soldering.

The volume of current carried by these bar windings is usually large and frequently the solder is melted and the usefulness of the armature destroyed. This, together with the fact that the cost of separately producing a conventional commutator is considerable, and the labor incident to joining the loop ends to the commutator bars is costly, makes the hereinafter described method of great value both as to cost and dependability.

A segment of a commutator is preferably of wedge shaped cross section, but where a core having rectangular winding apertures is to be employed the conductor bars are preferably of rectangular cross section.

The method of procedure hereinafter set forth provides an integral winding loop comprising conductor bars of rectangular cross section and commutator segments of wedge shaped cross section with minimum labor and minimum waste of material.

To carry out my method, sheet stock, preferably copper or other good conductive material, is passed thru a punch press or similar machine and cut apart on the lines 15, 15 etc., Fig. 1. At each stroke of the press two suitably shaped punches strike spot 17 of the sheet. The ends of these punches are beveled where they meet the sheet so that spots 17 are struck harder and made thinner at the edge 18 than at the edge 19.

The striking punches act ahead of the cutting punches so that when a blank comes under the cutting punch it already has the two beveled spots formed therein.

From a consideration of Fig. 1 it will be apparent that blanks Fig. 2 may be cut from a sheet, one after the other with very little waste, and that when they are cut they will comprise a long conductor bar 16 of rectangular cross section as at 13 Fig. 3 having lugs 24 and 25 of a wedge shaped cross section 14 Fig. 4 at each end and notches 26 and 27 cut in the ends of the lugs.

The structure Fig. 2 is next offset by bending the conductor bar 16 at 30. This provides a conductor bar 22 adapted to occupy a position in the outer layer of the winding and a conductor bar 23 adapted to occupy a position in the inner layer of the winding.

The structure Fig. 5 is now folded to compose the loop shown in the plan view Fig. 6 and end view Fig. 7, where bars 22 and 23 are axially parallel and circumferentially spaced apart but radially at variance, while lugs 24 and 25 are displaced to other axially parallel positions circumferentially spaced apart from the conductors but radially equidistant from the armature axis. The lugs 24 and 25 are of such thickness as to together compose a commutator segment.

Segments of conventional commutators are frequently composed of several circumferentially adjacent layers, so also in the present invention a lug 24 and a lug 25 are placed circumferentially adjacent in electrical contact and held by a commutator segment binding means which impinges on notches 26 and 27.

Fig. 8 shows several loops Fig. 6 in place in a core 33. The purpose of this figure is to show how a continuous circuit is provided by placing a commutator lug 24 circumferentially adjacent to a commutator lug 25, two such lugs in electrical contact joining adjacent loops of the circuit and together composing one commutator segment.

Other requirements of common practice must be met, such as having the core slots lined with insulating material, keeping the outer and inner layers of the winding electrically separated, etc.

When a number of loops equal to the number of slots have been assembled in a core, pairs of commutator lugs must be held in intimate electrical contact, one member of a pair with the other, to compose commutator segments, and the segments must be mechanically bound together, tho electrically separated from each other, to compose a commutator.

Spacers 34 of insulating material may be inserted to separate the several segments but must not be placed between two lugs which together compose a segment. Spacers 34 may, however, be eliminated by permitting insulation to extend between the segments when the commutator binding means is being applied.

A preferred binding means is shown in Fig. 9 where molded insulating material 31 surrounds the conductor bars and impinges on the notches 26 and 27 to bind the commutator segments together. Any suitable insulating material may be used, as may any suitable mold, a requirement being that the commutator lugs be subjected to inward radial pressure, or that they may be otherwise held to keep them in intimate contact while molding is taking place, and while the drawing shows the entire winding covered with insulating material, an economy may be effected by so arranging the mold as to permit insulating material to surround the commutator end of the armature only, and when the armature is to run at relatively low speed such modification may be justifiable.

Instead of using molded insulation as a binding means, the conventional commutator binding means may be employed. By cutting and notching a length of stock as in Fig. 10, instead of as in Fig. 5, a conventional commutator binding means shown in Fig. 11 may be used. In Fig. 10 the lug 35 is notched as at 36 and 37 and the lug 38 is notched as at 39 and 40. In Fig. 11 a nut 41 draws together the beveled head 42 of sleeve 43 and the beveled washer 44 against insulation 45, after the manner practiced in building ordinary commutators.

While in the foregoing I have shown and described a method of procedure consisting of a number of steps taken in a given order, it is to be understood that these steps need not be taken in the order given, nor do they need to be taken one at a time as indicated. For instance a plurality of spots 17 may be struck at one time and a plurality of blanks Fig. 2 may be cut at one stroke of the press, and while striking the spots preferably precedes the cutting of the blanks the reverse order may be followed if desired, or in an armature having a large number of commutator divisions, making the side of its segments substantially parallel, the striking operation may be omitted entirely if desired.

The offsetting of the blanks as in Fig. 5, however, necessarily follows the cutting, since blanks cut as in Fig. 5 could not be taken from a sheet consecutively without waste, and this part of the procedure constitutes one of the salient features of the invention.

Having described my invention, I claim—

1. The method of making an integral winding loop comprising two parallel spaced apart conductor bars joined together at one end and terminating at the open ends in commutator lugs, which consists of providing a sheet of conductive material, cutting blanks having two conductor bars together and in alignment, with wider commutator lugs at the ends extending oppositely and out of alignment, offsetting the blank edgewise at its middle part to bring the two conductor bars out of alignment and the lugs into alignment, then folding the blank to compose a loop in the manner disclosed.

2. The method of making an integral winding loop comprising two parallel spaced apart conductor bars of rectangular cross section joined together at one end and terminating in commutator lugs at the open ends, which consists of providing a sheet of conductive material of uniform thickness, cutting blanks having two conductor bars together and in alignment with wider commutator lugs at the ends extending oppositely and out of alignment, offsetting the blank edgewise at its middle part to bring the two

conductor bars out of alignment and the lugs into alignment, then folding the blank to compose a loop in the manner disclosed.

3. The method of making an integral winding loop comprising two parallel spaced apart conductor bars of rectangular cross section joined together at one end and terminating at the open ends in wedge shaped commutator lugs, which consists of providing a sheet of conductive material of uniform thickness thruout, striking portions of the sheet to produce areas which are thicker at one edge than at the other, cutting blanks having two conductor bars together and in alignment, with wider commutator lugs at the ends taken from the said areas and extending oppositely and out of alignment, offsetting the blank edgewise at its middle part to bring the two conductor bars out of alignment and the two lugs into alignment, then folding the blank to compose a loop in the manner disclosed.

4. The method of making an integral armature winding unit comprising a turn of the winding and two commutator lugs from flat sheet stock, which consists of cutting blanks having two conductor bars together and in alignment with wider commutator lugs at the ends extending oppositely and out of alignment, off-setting the blank edgewise at its middle part to bring the two conductor bars out of alignment and the two lugs into alignment, folding the blanks sidewise to bring the two offset conductor bars into parallel spaced apart positions and the two aligned commutator lugs into other parallel spaced apart positions.

5. The method of making an integral winding loop comprising two parallel spaced apart conductor bars joined together at one end and terminating at the open ends in commutator lugs, which consists of providing a sheet of conductive material, cutting blanks having two conductor bars together and in alignment, with wider commutator lugs at the ends extending oppositely and out of alignment, folding and curving the blank with reference to an axis, bringing the two offset bars into axially parallel angularly spaced apart positions the one bar farther from the said axis than the other bar, and the two aligned lugs into different axially parallel angularly spaced apart positions, both lugs at equal distances from the said axis.

6. The method of making an integral winding loop comprising two parallel spaced apart conductor bars joined together at one end and terminating at the open ends in commutator lugs, which consists of providing a sheet of conductive material, cutting blanks having two conductor bars together and in alignment, with wider commutator lugs at the ends extending oppositely and out of alignment, folding and curving the blank with reference to an axis, bringing the two offset bars into axially parallel angularly spaced apart positions the one bar farther from the said axis than the other bar, and the two aligned lugs into different axially parallel angularly spaced apart positions, both lugs at equal distances from the said axis, and both lugs closer to the said axis than either of said bars.

In testimony whereof, I hereunto subscribe my name.

VINCENT G. APPLE.