S. T. GRAHAM.

ORE FEEDER.

APPLICATION FILED APR. 11, 1907.

899,527. **Patented Sept. 29, 1908.**

5 SHEETS—SHEET 1.

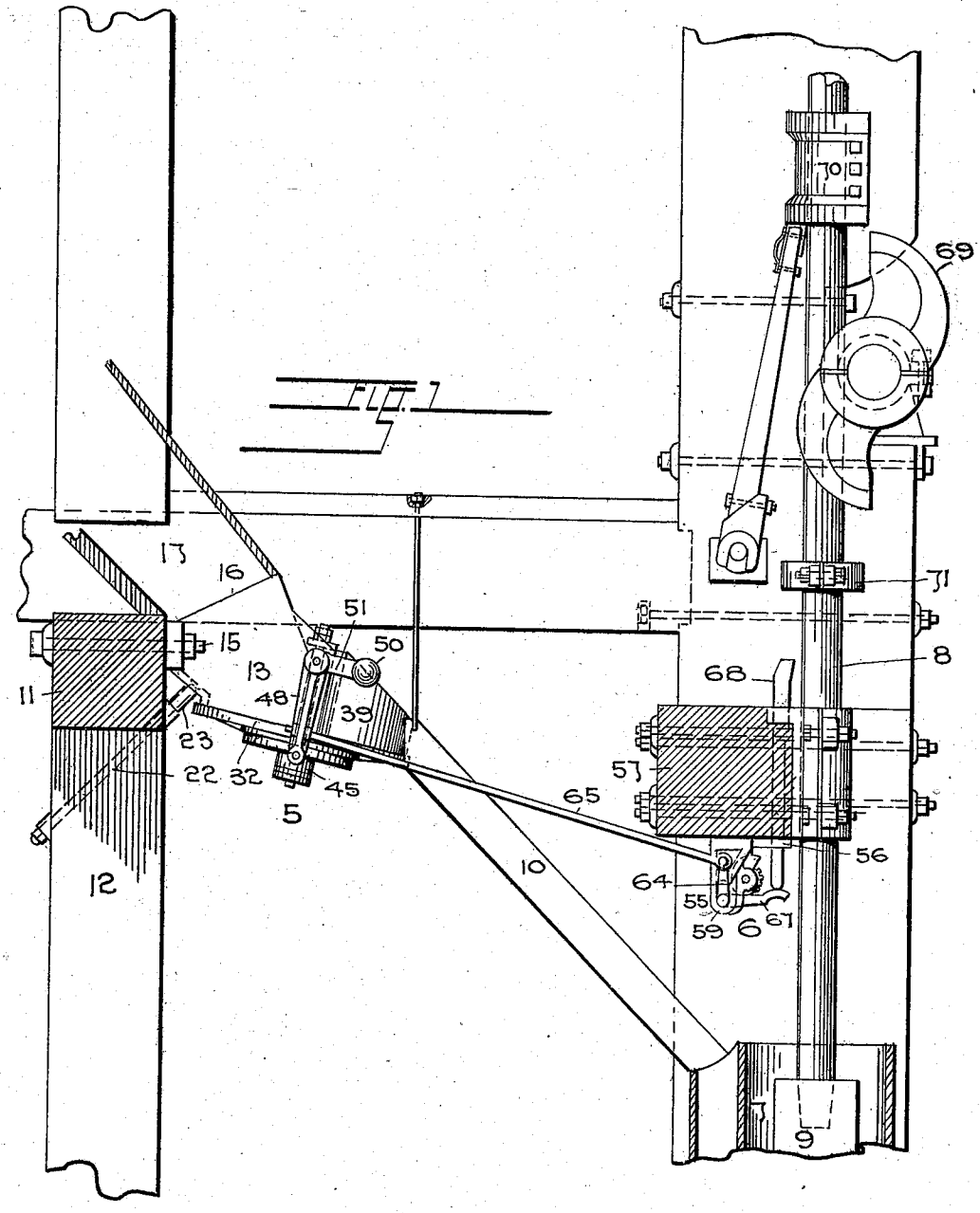

WITNESSES:

R. L. Downs

J. M. Stump

INVENTOR.

S. T. Graham

BY

J. J. Wheeler

ATTORNEY.

THE NORRIS PETERS CO., WASHINGTON, D. C.

S. T. GRAHAM.

ORE FEEDER.

APPLICATION FILED APR. 11, 1907.

899,527. **Patented Sept. 29, 1908.**

5 SHEETS—SHEET 2.

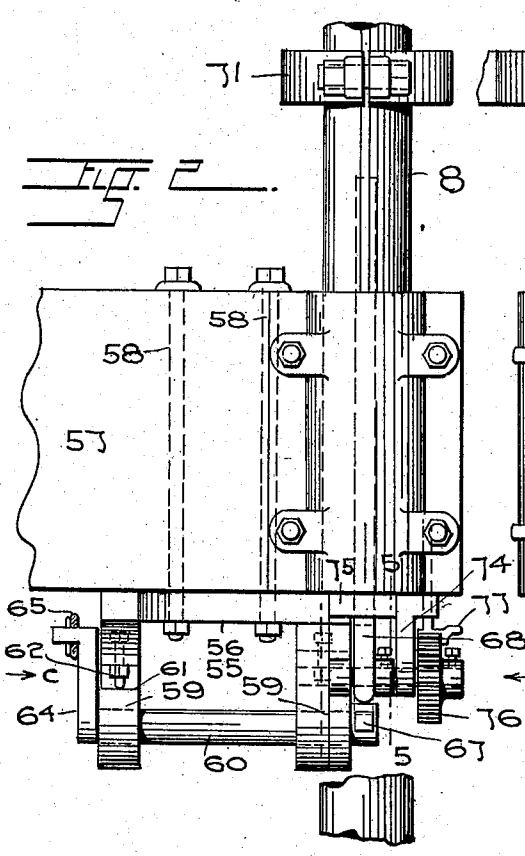

Fig. 2.

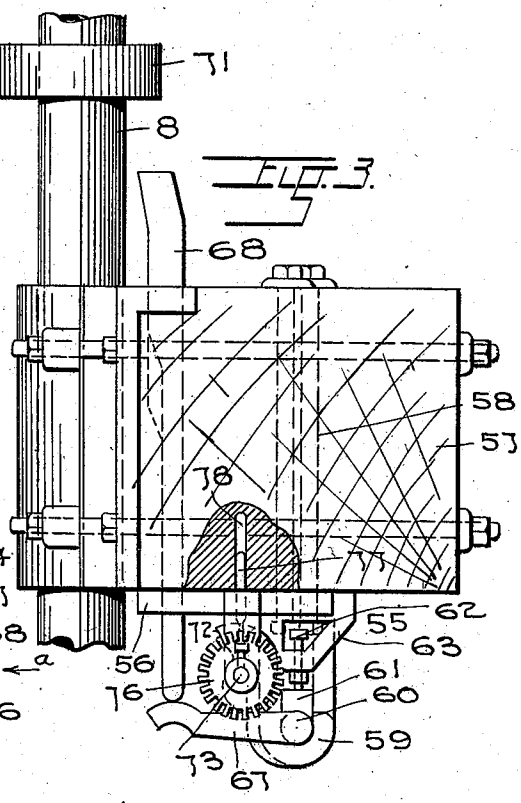

Fig. 3.

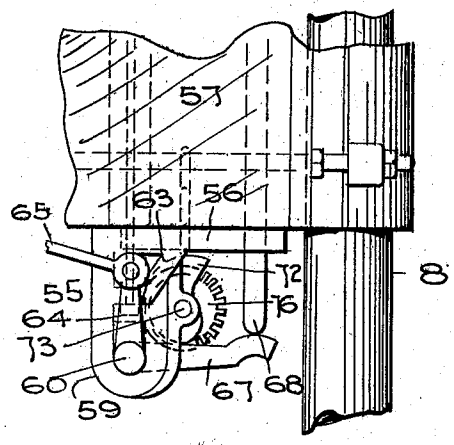

Fig. 4.

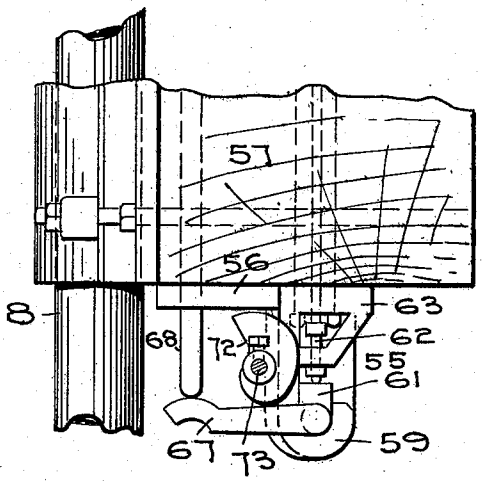

Fig. 5.

WITNESSES:

N. L. Downs.

T. M. Stump

INVENTOR.

S. T. Graham

BY

D. F. Delaney

ATTORNEY.

THE NORRIS PETERS CO., WASHINGTON, D. C.

S. T. GRAHAM.

ORE FEEDER.

APPLICATION FILED APR. 11, 1907.

899,527. **Patented Sept. 29, 1908.**

5 SHEETS—SHEET 3.

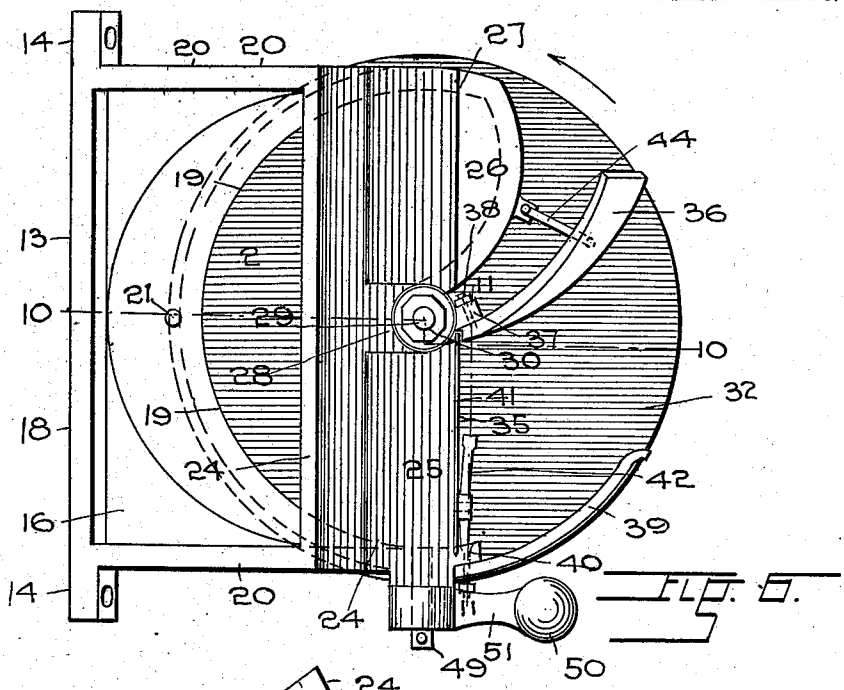

FIG. 6.

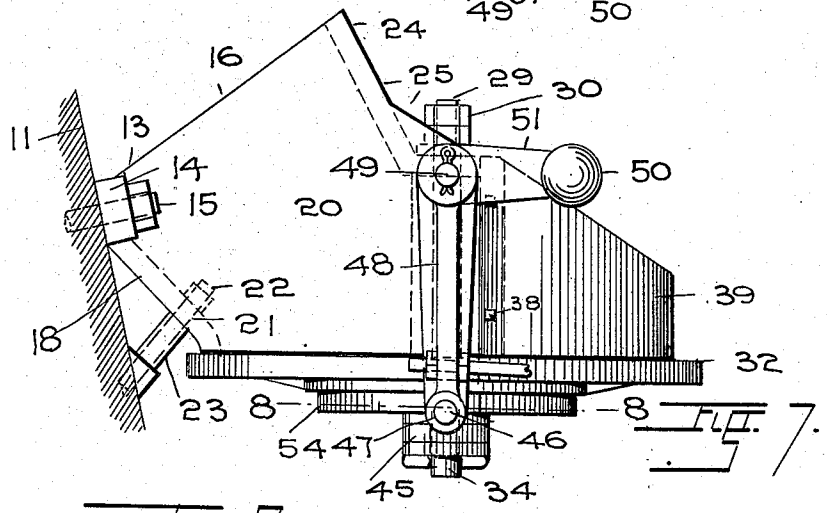

FIG. 7.

FIG. 8.

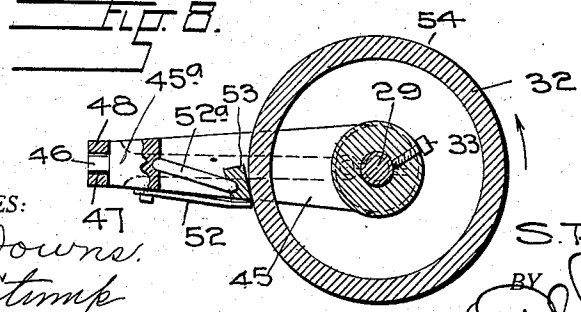

WITNESSES:

N. L. Downs.

T. M. Stumpf

INVENTOR.

S. T. Graham

BY

ATTORNEY.

THE NORRIS PETERS CO., WASHINGTON, D. C.

S. T. GRAHAM.

ORE FEEDER.

APPLICATION FILED APR. 11, 1907.

899,527. Patented Sept. 29, 1908.

5 SHEETS—SHEET 4.

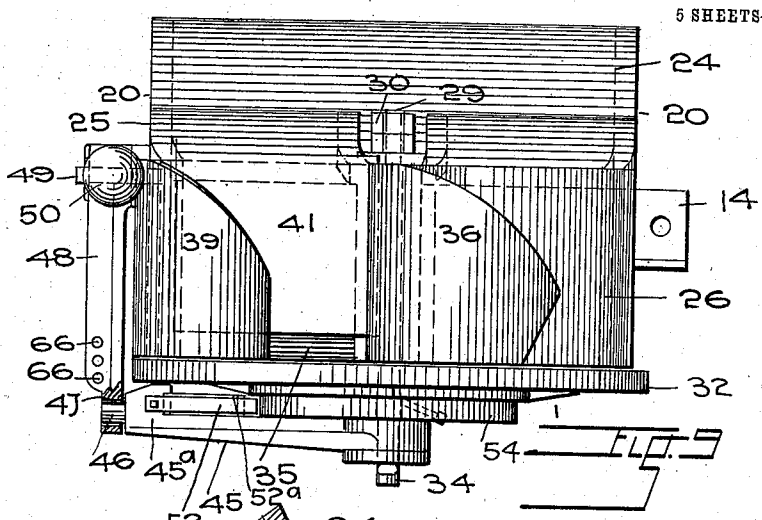

FIG. 9.

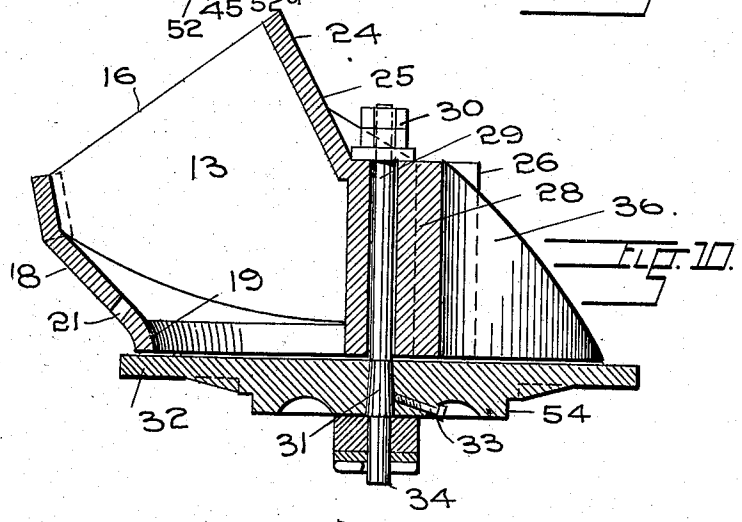

FIG. 10.

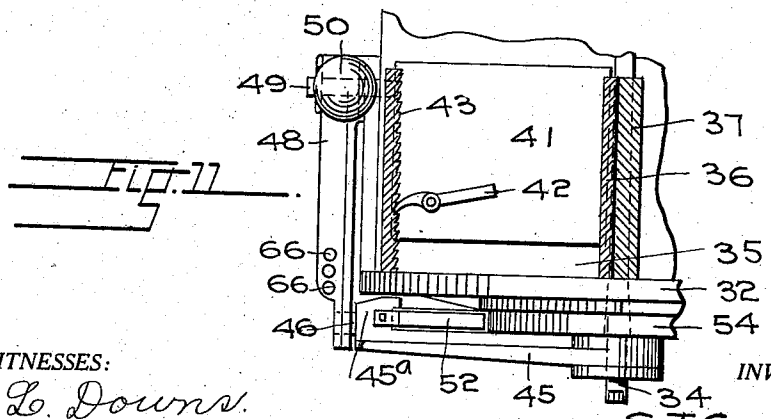

FIG. 11.

WITNESSES:

N. L. Downs.

T. M. Stump

INVENTOR.

S. T. Graham

BY

J. J. Williamson

ATTORNEY.

THE NORRIS PETERS CO., WASHINGTON, D. C.

S. T. GRAHAM.

ORE FEEDER.

APPLICATION FILED APR. 11, 1907.

899,527. Patented Sept. 29, 1908.

5 SHEETS—SHEET 5.

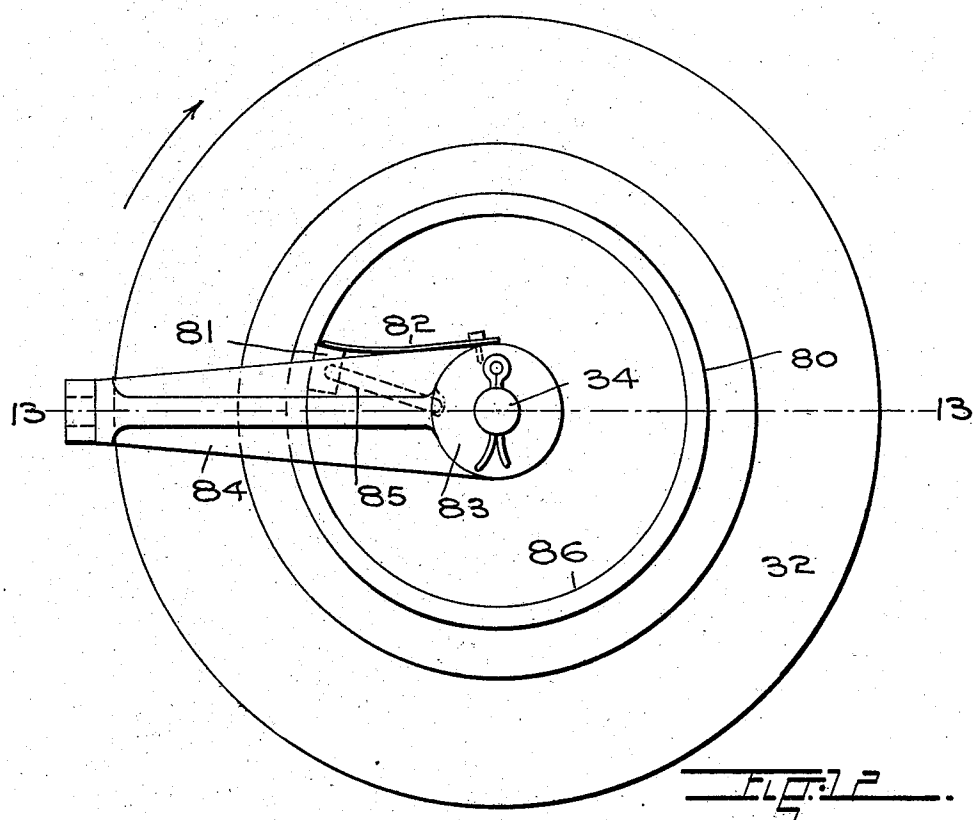

FIG. 12.

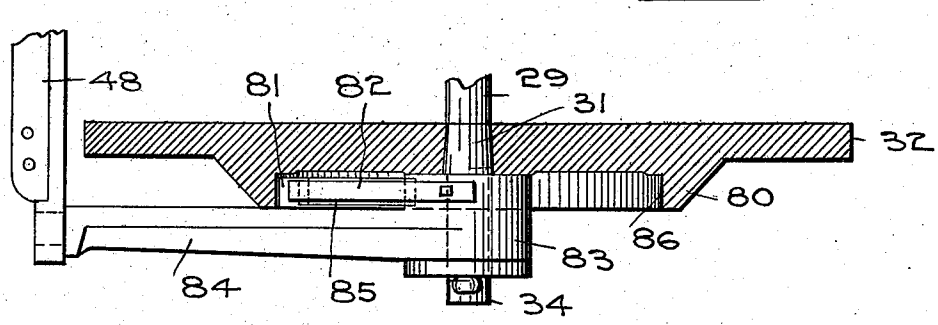

FIG. 13

WITNESSES:

N. L. Downs

K. M. Stump

INVENTOR.

S. T. Graham

BY J. J. Coolandet

ATTORNEY.

THE NORRIS PETERS CO., WASHINGTON, D. C.

UNITED STATES PATENT OFFICE.

SAMUEL T. GRAHAM, OF LOS ANGELES, CALIFORNIA.

ORE-FEEDER.

No. 899,527. Specification of Letters Patent. Patented Sept. 29, 1908.

Application filed April 11, 1907. Serial No. 367,701.

To all whom it may concern:

Be it known that I, SAMUEL T. GRAHAM, a subject to Edward VII, King of Great Britain, &c., residing at Los Angeles, in the county of Los Angeles and State of California, have invented certain new and useful Improvements in Ore-Feeders, of which the following is a specification.

This invention relates to improvements in automatic ore feeders and has for its objects to provide an apparatus in which simplicity of construction and operation and durability are combined with practicability in use and great efficiency, which being actuated by the movement of the stamp stem, delivers the ore into the mortar at each blow, in proportion to the length of the stroke and thus increases the efficiency of the mill, and which may readily be regulated to feed the ore in varying quantities according to its nature and the capacity of the crushing device into which it is fed. I attain these objects by the mechanism illustrated in the accompanying drawings in the various views of which like parts are similarly designated and in which

Figure 1 represents a fragmentary, sectional elevation of a stamp mill with my improved feeding apparatus in operative position, Fig. 2—an enlarged side elevation of the driving and regulating elements of my invention, Fig. 3, an end elevation looking from a point *a*, Fig. 2, Fig. 4—an end elevation looking from a point *c*, Fig. 2. Fig. 5—a vertical section taken along a line 5—5, Fig. 2. Fig. 6—an enlarged plan view of the feeding element of the apparatus, Fig. 7, a side elevation thereof, Fig. 8—a horizontal section taken along a line 8—8, Fig. 7, looking downwardly (the device is represented in this view as being turned at right angles to the position shown in Fig. 7). Fig. 9—a front view of the feeding element, Fig. 10—a vertical central section taken along a line 10—10, Fig. 6, Fig. 11—a fragmentary vertical section taken along the line 11—11, Fig. 6, Fig. 12—a plan view partly in section of the feed disk showing modified manner of applying the frictional connection with the oscillating arms, and Fig. 13—a vertical section taken along a line 13—13, Fig. 12.

The device as illustrated in the drawings comprises two elements, one of which, 5, is designed to intermittently feed a certain quantity of ore into the mortar 7 of the stamp mill to which it is applied, while the other, 6, being situated intermediate the stamp stem 8 and the first named element, is adapted to drive the latter, through instrumentality of the reciprocating movement of the said stem, and to regulate the quantity of ore fed below the stamps 9 preceding each blow. An inclined chute 10, shown only in Fig. 1, conveys the ore from the feeding element into the mortar.

The feeding element 5 is, as shown in Fig. 1, disposed at an angle of from 10 to 12 degrees to the horizontal plane and is preferably secured to a cross timber 11 on the ore bin posts 12 of the mill. It consists of a preferably rectangular hopper 13 having laterally extending ears 14 in engagement with the before named timber 11 and secured thereto by means of bolts 15. The mouth 16 of the hopper communicates, in practice, with the discharge end of a chute 17 which leads from a suitably located ore bin. The rear wall 18 of the hopper comprises a, in practice, vertical portion which engages the surface of the timber 11 and a forwardly inclined lower portion, the inner surface of which is concave and which terminates in a semi-circle 19 tangent to the side walls 20. An aperture 21 in the inclined portion of the wall 18 provides means to further secure the feeding element by a bolt 22 projecting through the ore bin post 12 and a distance sleeve 23, intermediate the latter and the hopper. The front wall 24 of the hopper consists of an inclined portion 25 ranging downwardly from its mouth, and an arcuate portion 26 extending at an angle to the upper portion 25 from a point adjacent its center to one of the side walls 20 with which it connects by means of an integral intermediate part 27, the inner arcual surface of which forms an extension of the concave inner surface and the circular lower extremity of the rear wall 18. The hopper is furthermore provided with a central, cylindrical post 28 contiguous to the inner extremity of the arcual portion of the front wall and extending from the inclined portion 25 at right angles to the plane in which the lower edges of the hopper are situated and in which it terminates. The central part of the upper surface of the inclined portion 25 is parallel to the above named plane and the post 28 has an axial bore through which, in practice, extends a shaft 29 held in place by nuts 30 upon its threaded upper extremity, in engagement

with the said central part of the wall 24 and having a conical extension 31 which supports a disk 32 held thereon against independent rotation by a set screw 33. The shaft terminates in a cylindrical portion 34, the function of which will hereinafter be explained.

Disk 32 is disposed in relation to the hopper so that its upper surface engages the lower edges of the latter and its circumferential edge extends beyonds its walls and thus forms a movable bottom upon which the ore fed into the mouth 16 of the hopper, is deposited and which, when rotated, carries it through the discharge opening 35 between the post 28 and the side 20 of the hopper. The ore carried by the revolving disk is scraped into the chute 10 by a plow shaped wing 36, the inner extremity of which is secured to a longitudinal lug 37 on the post 28, by means of bolts 38, while its opposite extremity is alined with the circumference of the disk. The wing is braced by a bolt 44 which connects it with the arcuate portion 26 of the front wall of the hopper. The ore is furthermore guided into the chute by a wing 39 secured at one of its extremities to an extension 40 of the wall 20 adjacent the feed opening 35, and disposed in contact with the upper surface of the disk and in alinement with its circumferential edge.

The quantity of ore carried through the discharge opening may be regulated by means of a gate 41, movably mounted in longitudinal guide ways in the inner surface of the extension 40 and the opposite surface of the plow wing 36, and which may be held in any one of a plurality of elevations by means of a dog or latch 42 pivotally mounted upon its outer surface in engagement with the teeth of a rack 43 cut into the inner surface of the extension 40 of the wall 20.

Loosely mounted upon the extremity 34 of the shaft 29, below the disk, is a laterally ranging arm 45 having a head 45^a the outer cylindrical projection 46 of which, extends loosely into an aperture 47 in the lower extremity of an oscillating arm 48 which extends along the outer surface of the adjacent wall 20 of the hopper and is rotatably mounted upon a stud 49 projecting therefrom.

A counterweight 50 at the extremity of an arm 51 which extends at right angles to the swinging arm 48, is proportioned to return the latter to its normal position after having been actuated by connection with the element 6 as will hereinafter be described.

A leaf spring 52 is secured at one of its extremities to the before named head 45^a of the arm 45 and ranging inwardly in parallel relation to the said arm, engages with its opposite end a friction block 53 which is held in contact with the peripheral surface of a cylindrical flange or narrow friction drum 54 formed concentrically below the disk 32, by means of a toggle 52^a, the extremities of which respectively engage correspondingly shaped recesses in the block and the inner surface of the head 45^a.

In the construction illustrated in Figs. 12 and 13, the disk 32 has a reduced, concentric annulus 80, the inner surface 86 of which is engaged by a friction block 81, held in place by engagement with the outer extremity of a leaf spring 82, the opposite end of which is secured upon the hub 83 of a lever 84 which is the equivalent of the lever 45 hereinbefore described. A toggle 85, the extremities of which project respectively in recesses in the inner surface of the block and the peripheral surface of the upper portion of the hub 83, is intended to force the block in frictional contact with the surface 86 when the lever 84 is rotated in the direction of the arrow in Fig. 12. The driving and regulating element 6 comprised in my invention, includes a shaft hanger 55 consisting of a plate 56, in practice secured in engagement with the lower surface of a cross timber 57 of the battery frame, by means of bolts 58, and therefrom depending, reversely arranged hooks 59, the axially alined recurved extremities of which rotatably support a crank shaft 60. The shaft is held against vertical displacement by means of bearing caps 61, maintained adjustably in contact therewith by set screws 62 which, engaging the upper surface of the said caps, project through correspondingly tapped apertures in lugs 63 on the under side of the plate 56. Shaft 60 is provided at one of its extremities with a crank arm 64, the upper end of which is connected with the lower end of the oscillating arm 48 on the feed element 5, by means of a connecting rod 65. The connection between the rod and the arm 48 is established by projecting the threaded end of the rod through one of a plurality of holes, 66, the diameter of which exceeds that of the rod and by placing nuts upon the rod in engagement with the opposite sides of the arm. The opposite extremity of the shaft 60 has an arm 67 extending at right angles to the arm 64 and whose curved extremity is engaged by the lower end of a reciprocating tappet rod 68, mounted in a vertical bore in the cross timber 57 of the battery frame and a therewith registering opening in the plate 56 of the shaft hanger. The upper portion of the rod 68 and the corresponding part of the bore are enlarged to limit the downward movement of the former. When by disengagement of the cam 69 of the stamp mill with the tappet 70 upon the stamp stem, the latter descends, the tappet rod 68 is simultaneously moved downwardly by contact with an auxiliary tappet 71 secured upon the stamp stem below the tappet 70, which movement is imparted to the shaft 60 and through instrumentality of the rod 65, to the swinging arm 48. To regulate the movement of the arm

67 and in consequence that of the oscillating arm 48 and the therewith associated feed disk, I have provided a cam 72 which, engaging the upper surface of the arm 67, is fixed upon a shaft 73, the extremities of which are rotatably mounted in axially alined apertures in one of the hook members 59, and an adjacent bracket 74 which depends from an extension 75 of the plate 56. The outer extremity of the said shaft projecting beyond the bracket, is provided with a toothed wheel 76, whose teeth are engaged by a gravity detent 77 which is vertically movable in a bore 78 in the timber 57 and a corresponding aperture in the extension 75 of the plate 56. By these means the position of the cam in relation to the arm 67 may readily be changed and the normal position of the said arm and the thereon resting tappet rod and consequently the degree of rotation of the shaft, be regulated in accordance with varying conditions.

Having thus described the mechanical construction of the apparatus, its operation is as follows:—After the degree of rotation of the rocker shaft 60 during each downward movement of the stamp stem, has been determined by regulating the position of the cam 72 as hereinbefore described, the quantity of ore to be carried by the intermittently revolving disk 32, from the hopper 13 into the subjacent ore chute 10, is established by raising or lowering the gate 41, while the length of each movement of the disk may be varied by projecting the end of the connecting rod 65 into one or another of the longitudinally arranged series of holes 66. During each downward movement of the stamp stem 8, the tappet 71, secured thereon, engages the upper extremity of the vertical tappet rod 68, thereby causing the shaft 60 to describe a partial rotation within its bearings in the hook shaped members 59 of the hanger 55. The rotative movement of the shaft is, by means of the crank arm 64 and the connecting rod 65, transformed into an oscillatory motion of the swinging arm 48 and the latter's movement being transmitted to the arm 45 mounted upon the lower extremity of the shaft 29, causes it to rotate in the direction of the arrows in Figs. 6, 8 and 12. The movement of the last named arm, independently of the disk, imparts to the toggle 52^a or 85, a tendency to assume a radial position in relation to the latter with the result that the block 53 or 81 is brought in frictional contact with the contiguous peripheral surface of the lower portion of the disk and the latter is impelled to rotate with the arm. During each partial rotation of the disk, a quantity of the ore contained in the hopper 13, is carried through the delivery-opening below the gate 41 to be subsequently scraped by contact with the plow wing 36, into the inclined chute 10 which delivers it into the mortar of the mill. When, after each blow of the stamp, its stem 8 moves upwardly and the tappet 71 releases the tappet rod 68, the counter weight 50 at the extremity of the arm 51, which connects with the oscillating arm 48, will by its specific gravity cause the various, interconnected operating parts of the two elements of the apparatus to resume their original normal positions.

Having thus described my invention what I claim as new and desire to protect by Letters Patent is:—

1. An ore feeder comprising a stationary hopper, a shaft passing through the center of said hopper, a disk on the shaft below the hopper and covering the lower end thereof, said disk having a concentric friction edge, an arm pivoted on the shaft below the disk and extending beyond the disk, a friction block in engagement with the friction edge in advance of the arm, a rigid member pivotally connecting said block with the arm, and means for oscillating the arm.

2. An ore feeder comprising a stationary hopper, a shaft passing therethrough, a disk mounted on said shaft below the hopper, said disk having a concentric friction edge, an arm mounted on the shaft below the disk and having its free end extending beyond the edge of the disk, a friction block in engagement with the friction edge of the disk, a rigid member pivotally connecting the block to the arm, a lever pivoted at its upper end to the hopper and having its lower end in engagement with the free end of the arm, means adjustably connected to the lower end of said lever for oscillating the same, and a weight connected to the upper end of said lever.

3. In an ore feeder the combination with a revoluble feed disk and means to impart an intermittent movement thereto, of a rocker shaft having angularly arranged arms, a suitable connection between one of the said arms and the said means, a reciprocating agent arranged to depress the other arm, a rotatable cam arranged to engage the latter, a toothed wheel adapted to rotate in conjunction with the cam, and an adjustable pawl engaging the said wheel.

In testimony whereof I have affixed my signature in presence of two witnesses.

SAMUEL T. GRAHAM.

Witnesses:
JNO. W. MOORE,
LOUIS STIRZEL.