N. E. GEE.

FUEL TRANSFER MECHANISM FOR STOKERS.

APPLICATION FILED DEC. 29, 1913.

1,276,642.

Patented Aug. 20, 1918.

3 SHEETS—SHEET 1.

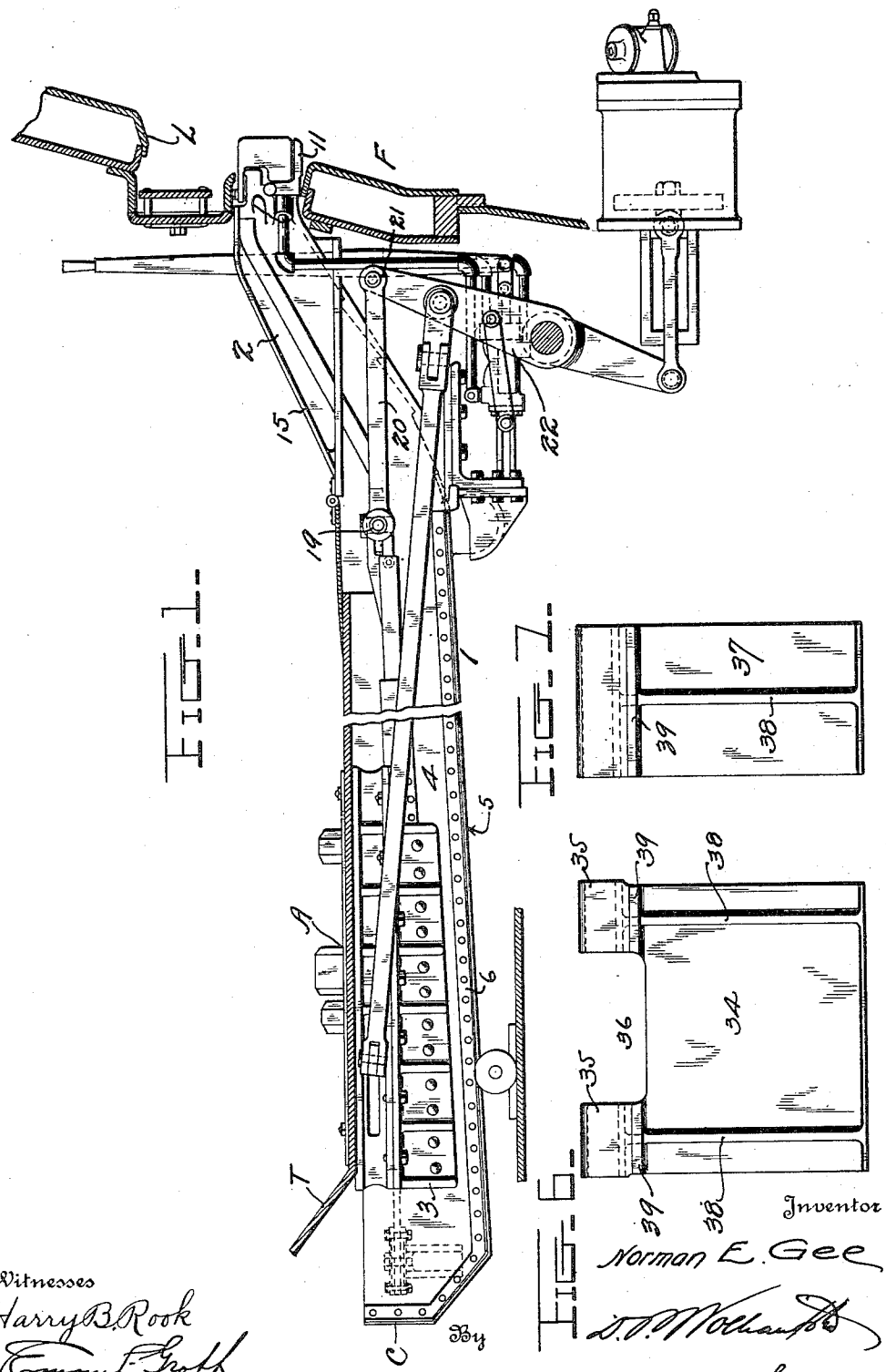

Witnesses

Harry B. Rook

Emory L. Groff

Inventor

Norman E. Gee

By D. P. Wolhaupter

his Attorney

N. E. GEE.

FUEL TRANSFER MECHANISM FOR STOKERS.

APPLICATION FILED DEC. 29, 1913.

1,276,642.

Patented Aug. 20, 1918.

3 SHEETS—SHEET 2.

FIG. 2.

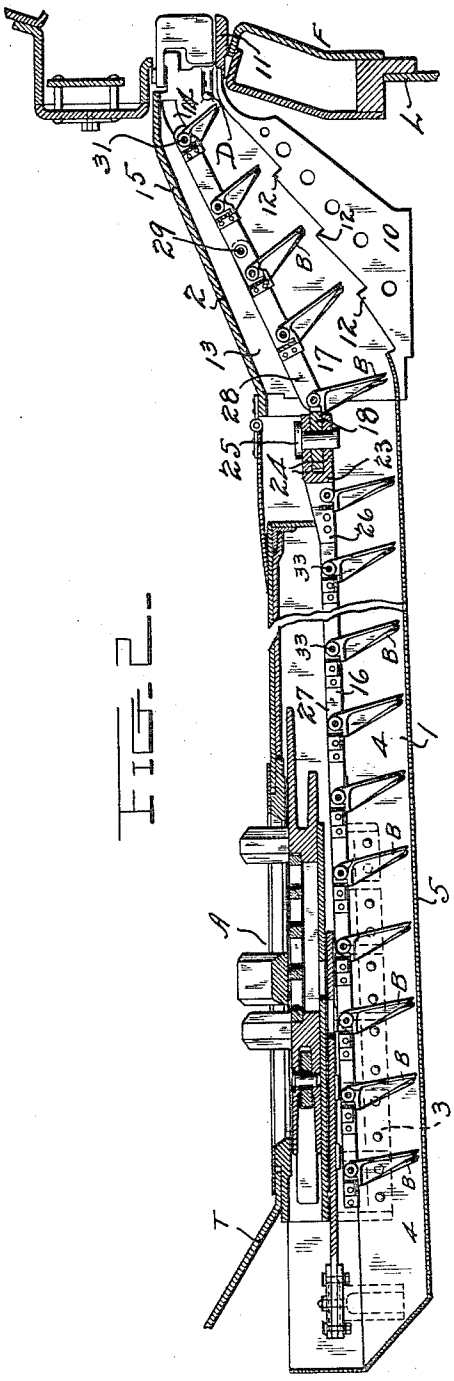

FIG. 1.

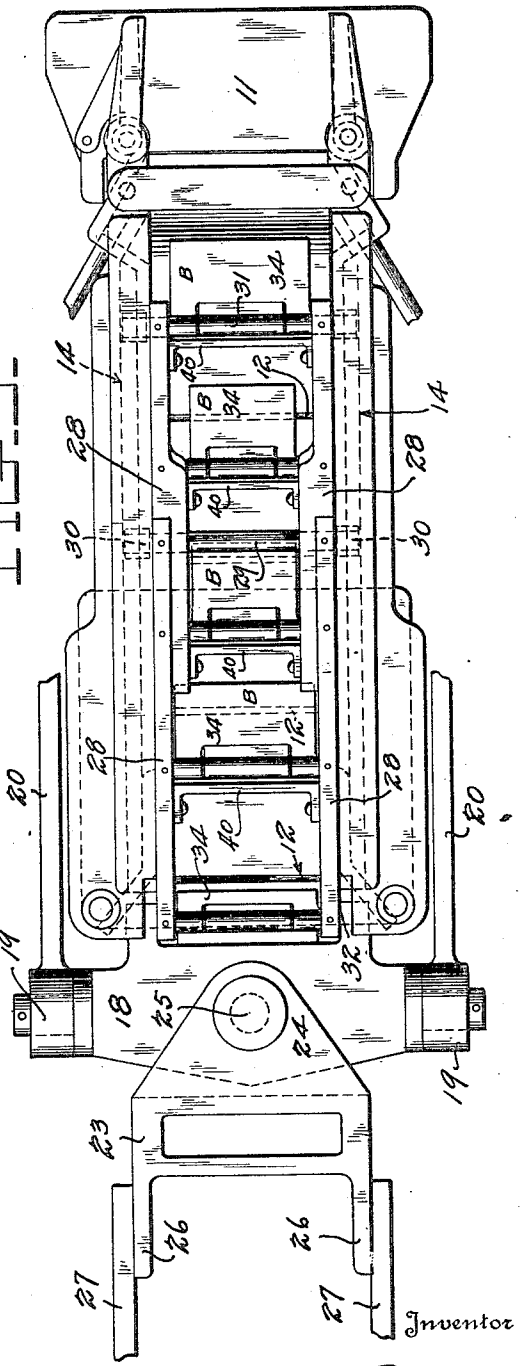

Witnesses

Harry B. Rook

Emory L. Groff.

Inventor

Norman E. Gee

By D. P. Wolhaupter

his Attorney

N. E. GEE.

FUEL TRANSFER MECHANISM FOR STOKERS.

APPLICATION FILED DEC. 29, 1913.

1,276,642.

Patented Aug. 20, 1918.

3 SHEETS—SHEET 3.

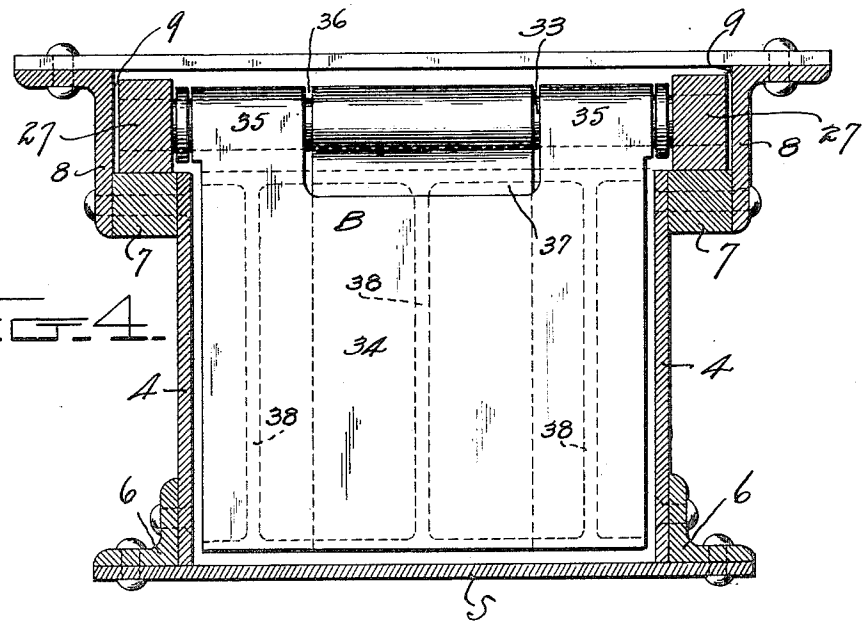

FIG. 4.

FIG. 5.

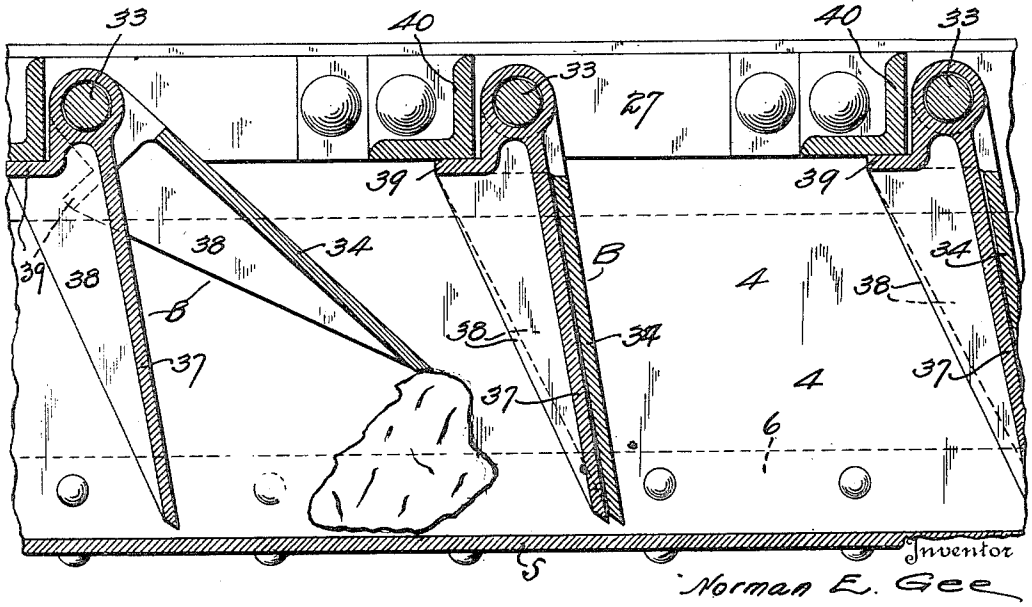

Inventor

Norman E. Gee

Witnesses

Harry B. Rook.

Emory L. Groff

By D. P. Wollaughter

his Attorney

UNITED STATES PATENT OFFICE.

NORMAN E. GEE, OF ALTOONA, PENNSYLVANIA.

FUEL-TRANSFER MECHANISM FOR STOKERS.

1,276,642. Specification of Letters Patent. Patented Aug. 20, 1918.

Application filed December 29, 1913. Serial No. 809,349.

To all whom it may concern:

Be it known that I, NORMAN E. GEE, a citizen of the United States, residing at Altoona, in the county of Blair and State of Pennsylvania, have invented certain new and useful Improvements in Fuel-Transfer Mechanism for Stokers, of which the following is a specification.

This invention relates to stoking apparatus for locomotive engines, and has special reference to a novel fuel transfer mechanism therefor.

Heretofore various expedients have been employed in stoking mechanisms to transfer the fuel from the tender magazine to the point for discharging into the fire box of a locomotive, but not with entirely satisfactory results, because of the exacting conditions imposed thereon when operating under service conditions which require an uninterrupted and positive advancing of definite quantities of the fuel at all times and regardless of the condition of the fuel as delivered from the tender into the conveyer. Efforts have been made to meet all these various conditions with run of the mine coal through the use of the old reciprocating type of conveyer having pivoted, feathering blades. This type of conveyer, however, has proved objectionable in stoking mechanisms, particularly when of a construction involving a plurality of pivotal blades or fingers on the same supporting bar or shaft, because of the fact of lumps of coal wedging between the comparatively narrow fingers and blades, and at times wedging in such a manner as to severely buckle or bend said blades thereby destroying their utility.

It is, therefore, one of the primary purposes of the present invention to so improve the old reciprocating type of conveyer as to render the same particularly available for use in stoking mechanisms to carry out the required functions in connection with run of the mine coal, and to insure the advancing of the fuel in definite quantities from the conveyer trough, regardless of the character or position of lumps that may have been admitted into the conveyer trough.

Another object of the invention is to provide certain novel improvements in an elevating conveyer section and its relation to the main conveyer to provide for the proper elevation of the fuel below the deck plate to a point where it will be deposited for distribution into the fire box of the locomotive.

Other important objects are involved which will be apparent to those familiar with this special art as the nature of the invention is better understood, and the same consists in the novel construction, combination and arrangement of parts hereinafter more fully described, illustrated and claimed.

A preferred and practical embodiment of the invention is disclosed in the accompanying drawings in which—

Figure 1 is a side elevation of my improved transfer mechanism showing the conveyer actuating mechanism.

Fig. 2 is a longitudinal sectional view of my improved transfer mechanism.

Fig. 3 is a top plan view of the elevated section of the conveyer and a portion of the elevating chute.

Fig. 4 is a transverse sectional view of the main conveyer chute showing in elevation one of the fuel advancing units.

Fig. 5 is a detail longitudinal sectional view of the conveyer chute showing the construction and operation of the blades comprising the fuel advancing units.

Fig. 6 is a detail plan view of one of the fuel advancing blades.

Fig. 7 is a similar view of the follower guard blade.

Similar reference characters designate corresponding parts throughout the several figures of the drawings.

In the embodiment disclosed in the drawings, a conveyer chute designated in its entirety by the reference character C is shown as being in communication with the magazine of the fuel tender T at a point where the fuel crusher A, such as that disclosed in my pending application Serial No. 805,575, filed December 9, 1913, is suspended entirely within the gravity discharge opening in the bottom of the magazine, while the opposite end is in communication with the fire box F of a locomotive L.

The conveyer chute C essentially comprises two sections, namely a substantially horizontal main advancing chute 1 arranged beneath the tender and deck plate and an

elevating chute 2, the latter being fixed to the locomotive while the former has a supporting connection as at 3 with the crusher A. The said crusher A is suspended within the gravity discharge opening of the fuel magazine in such a manner that it is capable of movement in all directions in the same horizontal plane, as fully disclosed in my former application hereinbefore mentioned, in order to permit the chute to accommodate itself to the movement of the engine and tender.

The main advancing chute 1 comprises in its construction the side members 4 and the bottom plate 5 which are connected by means of the angular reinforcing rods 6, and also includes the longitudinally arranged bearing bars 7 which have connected to their outer faces the angular side bars 8. This particular arrangement of the bearing bars 7 and the side bars 8 on each side of the chute provides a guideway 9, the purposes of which will hereinafter more fully appear.

The elevating chute 2 which is almost wholly carried by the locomotive includes in its organization a base casting 10 which connects with the main advancing chute 1 at one end below the deck plate and is provided at its other end with a distributing table 11 which projects into the fire box of the locomotive, while its intermediate portion is provided with a plurality of transversely arranged check ledges 12 which tend to prevent retrograde movement of the coal during the stoking operation. The side walls 13 are suitably secured to the base casting 10 and are provided with the guide channels 14 which are designed to receive portions of one of the conveyer sections, as will hereinafter more fully appear. The said elevating chute 2 is further provided with a cover plate 15 which may be removed to render the conveyer parts quickly accessible and expose them to view as shown in Fig. 3 of the drawings.

The conveyer mechanism as a whole comprises two or more sections, namely a main advancing conveyer designated in its entirely by the reference character 16 which operates in the chute 1 and feeds fuel in a substantially horizontal plane, and an elevating conveyer section designated in its entirety by the reference numeral 17 which is disposed at an angle to the main advancing conveyer and operatively arranged in the elevating chute 2 so as to elevate fuel onto the table 11, from whence it is thrown to selected parts of the fire box by the discharging device D. The said elevating conveyer 17 is suitably connected to a cross-head 18 which is arranged to reciprocate in the conveyer chute 1 and provided at its outer extremities with pivotal connections 19 to the operating arms 20 which are in turn pivotally connected as at 21 to the engine actuated lever arm 22. For the purpose of connecting the conveyer sections 16 and 17 there is provided a coupling yoke 23 which is in the nature of a casting having at one end integral attaching flanges 24 which are adapted to receive therebetween the cross head 18, which is pivotally connected thereto by means of the pivot pin 25. The other end of the coupling yoke 23 is provided with rearwardly extending attaching arms 26 which are bolted or otherwise secured to the main conveyer frame bars 27 which are preferably two in number as clearly shown in the drawings and arranged to slide within the guideway 9 formed in the conveyer chute 1.

With reference to the conveyer frame bars 28 of the elevating conveyer 17, it will be observed that the same are pivotally connected by means of the pivot pin 29 which is provided with the extended end portions 30 which are so arranged that they slide within the guideway 14 in each of the side plates 13 of the elevating chute 2. In order to support and guide the extreme ends of the bars 28 which are nearest the locomotive fire box, the same are connected with a pivot pin 31 which is similar in construction to the pin 29. As previously stated, the end of the bars 28 adjacent the cross-head 18 are connected as at 32 to portions of the cross-head provided for that purpose. Therefore, it may be noted at this point that the elevating conveyer 17 comprises two pivotally joined sections which are connected to the reciprocating cross-head 18, so that when the latter is in operation the elevating conveyer 17 will have a free reciprocating movement in the guide slots 14 of the elevating chute 2. It may also be noted in this connection that the reciprocating movement of the cross-head 18 will be imparted to the conveyer frame bars 27 of the main advancing conveyer 16, because of their connection with the coupling yoke 23 which is pivotally connected as at 25 to the cross-head. In other words, the reciprocation of the cross-head 18 will cause a corresponding movement of both conveyer sections 16 and 17, the former in the guideway 9 of the main advancing chute 1 and the latter in the guide channels 14 of the elevating chute 2.

Transversely arranged between each of the conveyer frame bars 27, and each of the bars 28 are a plurality of pivot bars 33 upon which are pivotally mounted the fuel advancing units B. Each of the said fuel advancing units B essentially comprises a main advancing blade 34 which is preferably co-extensive with the width of the conveyer chute and provided with the pivot arms 35 which fit over the pivot bars 33. This construction of the main advancing blades 34 provides a central cut-away portion 36 which leaves the central portion of the bar 33 exposed. Upon this exposed portion of

the bar 33 is mounted a follower guard blade 37 in a manner similar to the mounting of the main advancing blade 34, and so that the front face of the blade 37 will lie close against the rear face of the blade 34 when both are suspended from the same pivot bar. As will be observed in the drawings, the follower blade 37 is preferably of less width than the main advancing plate 34, and is provided on its rear side with a central reinforcing rib 38 which terminates at its upper portion in an abutment 39. This construction is also common to the blade 34, and for the purpose of obtaining an advancing effect from the blades, upon the forward movement of the conveyer frame there is provided adjacent each pivot bar 33 a transversely arranged stop bar 40 which is preferably angular in cross-section and arranged to engage the abutment 39 of both the blades 34 and 37 to prevent them swinging too far backward.

As clearly shown in Fig. 5 of the drawings, the forward movement of the main conveyer 16, and the elevating conveyer 17, both of which have advancing units of the same construction, will push the fuel fed into the conveyer chute from the magazine forward in the chutes 1 and 2, and upon the backward movement of the conveyer all of the fuel advancing units B will trail over the fuel and leave what they have brought forward farther advanced in the entire chute C. However, it may happen that a lump of coal will slip into the conveyer chute and be pushed into such a position that the main advancing blade 34 in its backward movement will not be drawn back far enough to completely be pulled off of the lump. If this should be the case, as shown in Fig. 5, the next forward movement of the blade 34, would be ineffective as far as advancing the fuel was concerned, because the said blade 34 would merely slide over the lump and not engage any fuel in the bottom of the chute. However, the provision of the follower blade 37 makes it impossible for the forward movement of the blade 34 to be useless, since it can maintain its normal position and upon the forward movement of the conveyer push the lump from under the blade 34 and at the same time advance what fuel may be in front thereof. As stated, where only one blade is employed, it often happens that a lump such as shown in Fig. 5 will get into a position where the main blade will simply slide back and forth over the same, without advancing the lump, whereas when a follower blade is employed in connection with the main blade, this will not happen. It will be noted that the beveled ends of the two blades together present a "saw-tooth edge." Accordingly, when both of the blades 34 and 37 are held lifted by a lump of unusual size, the continuous reciprocation of the conveyer causes the sharp or beveled ends of the blades to chop into and break away the lump. In this operation, the trailer or follower blade 37 naturally falls to its upright position in advance of the blade 34, and finally displaces the lump from beneath the said blade 34. In this connection, however, it will be understood that a body of fuel to a considerable depth is maintained in the conveyer boxing 4, and the pointed ends of the blades 34 and 37 will have a plunging effect into this body of fuel when they are lifted up from their upright positions, thus causing the chopping down of lumps in the manner referred to. This construction makes it impossible for the conveyer to have any idle or false movement, in other words every forward movement of the conveyer is sure to advance fuel, thus insuring a positive and accurate fuel supply which is essential to an automatic stoker not only to simulate as closely as possible the accuracy of hand firing, but to save power.

From the foregoing description it is thought that the many features and advantages of the present construction will be readily understood without further comment, and it will of course be understood, that various details of construction may be resorted to without departing from the spirit of the invention or from the scope of the appended claims.

I claim:

1. A stoker including a fuel transfer mechanism comprising a main conveyer chute, an elevating chute arranged at an angle thereto, a rectilinearly reciprocating conveyer in said main chute, an elevating conveyer connected to said first mentioned conveyer and reciprocating in said angularly disposed elevating chute, and fuel advancing blades pivotally carried by said conveyers.

2. A stoker including a fuel transfer mechanism comprising a main conveyer chute disposed in a substantially horizontal plane, an upwardly directed elevating chute arranged at one end thereof, a rectilinearly reciprocating conveyer in said main chute, fuel advancing blades pivotally carried by said conveyer, a jointed elevating conveyer connected at one end with the rectilinearly reciprocating conveyer, and fuel advancing blades pivotally carried by said elevating conveyer.

3. A stoker including a fuel transfer mechanism comprising a main conveyer chute, an elevating chute, a main conveyer in said conveyer chute having a plurality of pivotally suspended advancing blades, an elevating conveyer in said elevating chute and also having a plurality of pivotally suspended advancing blades, said blades being substantially coextensive with the width of

the chute, and a follower guard blade carried with each advancing blade in rear thereof.

4. A stoker including a fuel transfer mechanism comprising a main conveyer chute, an elevating chute, pivotally connected advancing and elevating conveyer sections respectively operating in the main conveyer chute and elevating chute, and each of said conveyer sections having a plurality of pivotally-hung fuel advancing units each unit comprising an advancing blade and a follower guard blade hung on the same pivot.

5. A fuel transfer mechanism for stokers including a main conveyer chute having a guideway, an upwardly directed elevating chute arranged at one end of the main chute, and having a guideway, a main advancing conveyer frame slidably mounted in the guideway in said main chute, fuel advancing members pivotally carried by the main conveyer frame and being substantially coextensive with the interior dimensions of the main chute, an elevating conveyer frame slidably mounted in the guideway of the elevating chute, and a plurality of pivotally mounted fuel advancing members progressively decreasing in vertical height as they approach the end of the conveyer frame.

6. A stoker including a fuel transfer mechanism comprising a conveyer chute and an elevating chute. a main advancing conveyer adapted to reciprocate longitudinally within said conveyer chute, an elevating conveyer in said elevating chute, an engine actuated member arranged at the junction of said main and elevating conveyers and connected with said elevating conveyer, and a coupling member connecting said engine actuated member and the main advancing conveyer.

7. A stoker including a fuel transfer mechanism comprising a main conveyer chute, and an elevating conveyer chute, a main advancing conveyer adapted to reciprocate longitudinally in the main conveyer chute, an elevating conveyer adapted to reciprocate in said elevating conveyer chute, an engine actuated cross head connected with the elevating conveyer, and a coupling yoke pivotally connected with said cross head, and having means for connecting the elevating conveyer with the main advancing conveyer.

8. A stoker including a fuel transfer mechanism comprising a main conveyer chute, an elevating chute arranged at an angle thereto and gradually diminishing in height toward its discharge end, a rectilinearly reciprocating conveyer in said main chute, an elevating conveyer connected to said first mentioned conveyer and reciprocating in said elevating chute, fuel advancing blades pivotally carried by the conveyer operating in the main chute, and other fuel advancing blades carried by the conveyer operating in the elevating chute, said latter blades progressively diminishing in vertical height as they approach the discharge end of said chute.

9. A stoker including a fuel transfer mechanism comprising a conveyer chute, a main fuel advancing conveyer and an elevating conveyer connected with said main conveyer, double-bladed fuel advancing units pivotally carried by the conveyer sections, means for preventing the backward rotation of the fuel advancing units, and means for reciprocating both conveyer sections.

10. A fuel transfer mechanism for stokers including a main conveyer chute having a guideway, an elevating chute communicating with said main chute and also having a guideway, a main advancing conveyer consisting of frame bars having transversely arranged pivot bars, and also similarly arranged stop bars and slidable in the guideway of the main conveyer chute, an elevating conveyer comprising frame bars having jointed connections and slidable in the guideway of the said elevating chute, and also including pivot bars and stop bars, fuel advancing units hung from said pivot bars, actuating means pivotally connected with the elevating conveyer, and means for coupling the main advancing conveyer to the said actuating means.

11. A fuel transfer mechanism for stoking apparatus including a conveyer chute and a reciprocating conveyer therein, said conveyer having a frame, a plurality of pivotally suspended advancing blades, and a follower guard blade carried in rear of each advancing blade.

12. A fuel transfer mechanism for stoking apparatus including a conveyer chute and a reciprocating conveyer therein, said conveyer having a frame, a plurality of pivotally suspended advancing blades being substantially coextensive with the interior dimensions of said chute, and a follower guard blade carried in rear of each advancing blade.

13. A fuel transfer mechanism for stoking apparatus including a conveyer chute and a reciprocating conveyer therein, said conveyer having a frame, and a plurality of pivotally suspended fuel advancing units carried by said conveyer, each unit comprising a fuel advancing blade and a follower guard blade hung on the same pivot and in rear of said advancing blade.

14. In a stoker, in combination, a horizontal reciprocable transferring conveyer having pendent swinging pusher blades, an elevating reciprocable conveyer flexibly connected with the transferring conveyer and

having pendent swinging pusher blades, and actuating means attached to the said conveyers at their connected ends.

15. In a stocker, in combination, a horizontal reciprocable transferring conveyer having pendent swinging pusher blades, a jointed elevating reciprocable conveyer flexibly connected with the transferring conveyer and having pendent swinging pusher blades, and actuating means attached to the said conveyers at their connected ends.

In testimony whereof I hereunto affix my signature in the presence of two witnesses.

NORMAN E. GEE.

Witnesses:
F. N. PARIS,
J. T. HANLON.

Copies of this patent may be obtained for five cents each, by addressing the "Commissioner of Patents, Washington, D. C."