J. F. MISER.

CURTAIN HOLDING BRACKET.

APPLICATION FILED APR. 5, 1915.

1,146,642. Patented July 13, 1915.

Fig. 1.

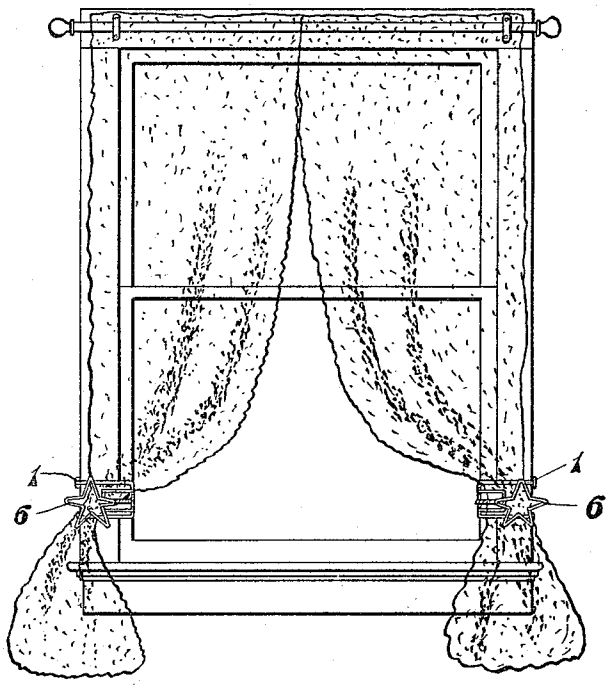

Fig. 2.

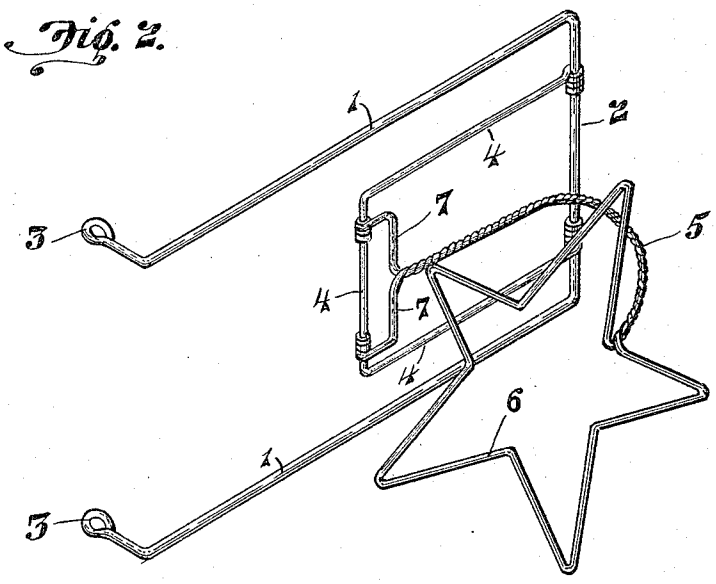

Witness
Robert L. Karcher.

Inventor
John F. Miser.

By F. W. Bond

Attorney

COLUMBIA PLANOGRAPH CO., WASHINGTON, D. C.

UNITED STATES PATENT OFFICE.

JOHN F. MISER, OF CANTON, OHIO.

CURTAIN-HOLDING BRACKET.

1,146,642. Specification of Letters Patent. Patented July 13, 1915.

Application filed April 5, 1915. Serial No. 19,101.

To all whom it may concern:

Be it known that I, JOHN F. MISER, a citizen of the United States, residing at Canton, in the county of Stark and State of Ohio, have invented a new and useful Curtain-Holding Bracket, of which the following is a specification.

My invention relates to curtain holding brackets, and the object of the invention is to provide a bracket adapted to hold the lower portion of a curtain to one side of the window and also to provide adjustment whereby the curtain can be held in different adjustments. This object, together with other objects readily apparent to those skilled in the art, may be attained by the construction illustrated in the accompanying drawings, although the invention may be embodied in other forms, the construction illustrated being chosen by way of example.

In the accompanying drawings, Figure 1 represents a front view of a window provided with curtains showing my improved brackets properly connected to the window casing and the curtains spaced from each other at their lower ends. Fig. 2 is a detached perspective view of the bracket.

Similar numerals of reference indicate corresponding parts throughout all the figures of the drawing.

In the accompanying drawings 1 represents the spaced bracket members, and 2 the integral joining member, said bracket members being provided with the screw receiving eyes 3. To the tie or joining member 2 is pivotally attached the swinging member 4, which is pivotally connected by means of the wire being wrapped around the tie member 2, said wire being wrapped in such a manner that the member 4 will be frictionally held in the position placed, regardless of any position within its movement. To the member 4 is pivotally attached the curtain holding bracket 5, which bracket is hook shaped and is so formed for the purpose of receiving the folds of the curtain and holding the curtain against displacement. For the purpose of giving a pleasing appearance the outer end of the bracket 5 may be provided with any desired ornamentation such as the star 6, but I prefer to form the entire curtain holding bracket of wire and of a single piece.

For the purpose of preventing any tilting of the curtain holding bracket it is connected to the member 4 by means of the arms 7, a portion of the wire making up said arms being wrapped tightly around the swinging member 4.

It will be understood that by the compound pivotal movement as between the fixed member 1 and the curtain holding bracket 5 I am enabled to provide a wide range of adjustment for the curtain holding bracket 5.

Having fully described my invention what I claim as new and desire to secure by Letters Patent, is:

In a curtain holding bracket, the combination of a bracket member adapted to be secured to a window casing, an intermediate bracket member pivotally and frictionally connected to the fixed bracket member, a curtain holding bracket pivotally and frictionally connected to the intermediate bracket, said curtain holding bracket provided with a hooked outer free end.

In testimony that I claim the above, I have hereunto subscribed my name in the presence of two witnesses.

JOHN F. MISER.

Witnesses:
J. H. BISHOP,
F. W. BOND.

Copies of this patent may be obtained for five cents each, by addressing the "Commissioner of Patents, Washington, D. C."