Sept. 19, 1933. P. AITCHISON 1,927,056

METHOD OF AND MECHANISM FOR CLEANSING THE INKED SURFACES OF ENGRAVING PLATES

Filed Dec. 2, 1927

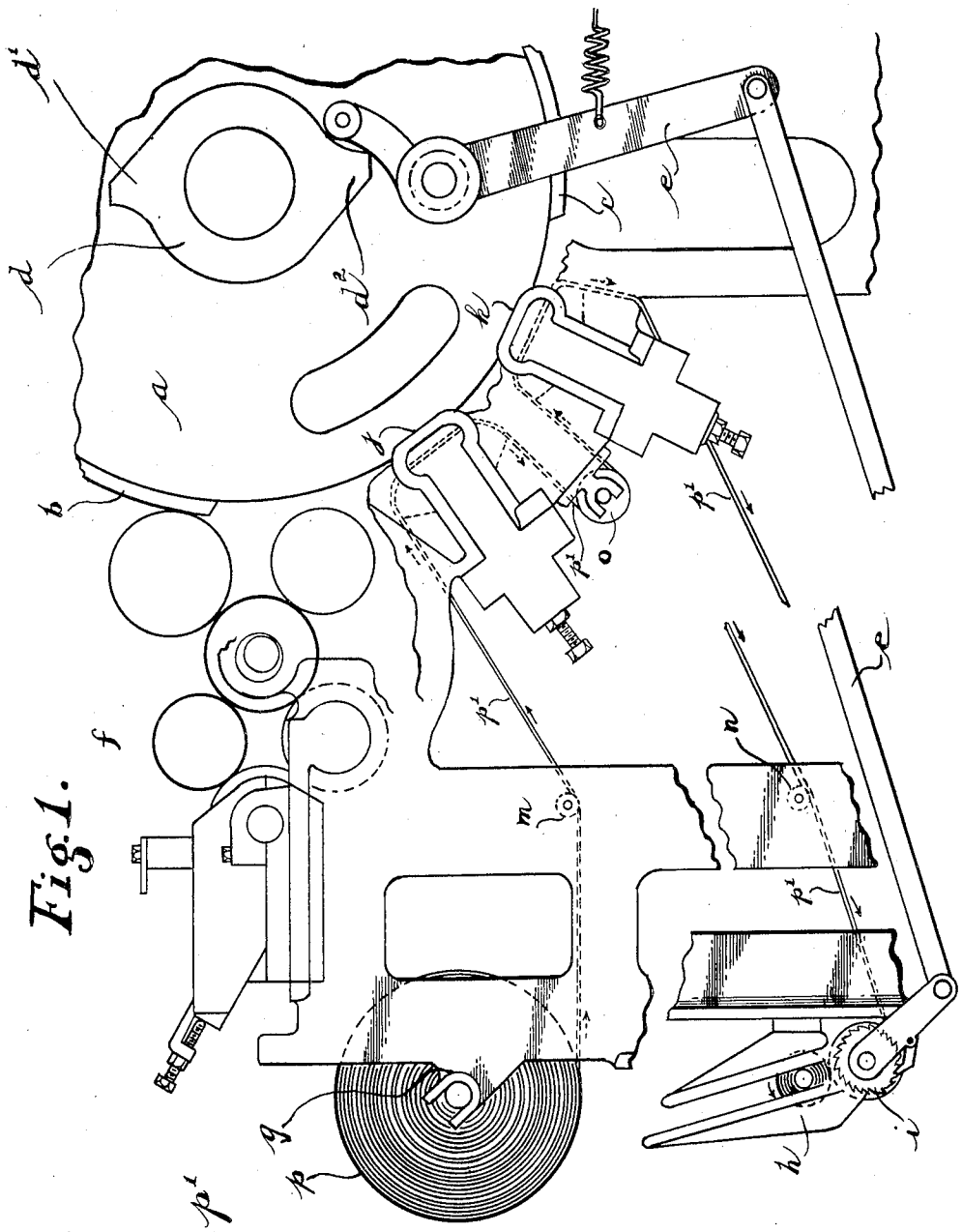

Fig. 1.

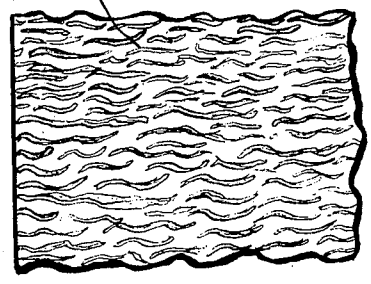

Fig. 2.

Peter Aitchison

INVENTOR

BY Grover P. Wentworth

his ATTORNEY.

Patented Sept. 19, 1933 1,927,056

UNITED STATES PATENT OFFICE

1,927,056

METHOD OF AND MECHANISM FOR CLEANSING THE INKED SURFACES OF ENGRAVING PLATES

Peter Aitchison, New Rochelle, N. Y., assignor to American Bank Note Company, New York, N. Y., a corporation of New York

Application December 2, 1927. Serial No. 237,147

6 Claims. (Cl. 101—156)

My invention relates to the method of, and mechanism for cleansing the inked surfaces of engraving plates, and more particularly to a method of removing the ink from the non-printing surface of the plate, and to a type of such mechanism using a continuous web of wiping material adapted to be engaged with the face of a printing plate prior to the making of each impression therefrom.

Heretofore, it has been the common practice, in connection with undersurface printing machines of various types, to use a wiping mechanism embodying therein a platen across which is intermittently fed a continuous web of a rough fabric capable of removing the ink from the non-printing surface of a plate in a manner to utilize a portion of the surface ink for ensuring a complete filling of the intaglio lines in the plate. Where a printing press is equipped only with a wiping mechanism, this web, or as it is termed in the art, "rag", has ordinarily been in the nature of burlap. When mechanical polishing has been resorted to, the material used for the polishing web has been a muslin. Various other materials have been used for the wiping and polishing webs or strips, and it has long been the common practice, in embossing machines, to wipe the steel dies used in such machines with a paper strip passing over a platen, and fed intermittently after each disengagement of the plate with the paper covered platen.

With the above conditions in mind, I have provided a wiping mechanism for steel plate or undersurface printing machines in which the use of burlap, muslin or other cloths may be dispensed with, and strip paper substituted therefor.

With the use of such paper, the necessity for washing or laundering cloths after they have been once run through a press is avoided, a complete filling of the lines of a plate is secured, and the plates may be very effectively wiped and polished. With the use of burlap and muslin webs, it has been found desirable to close a clamping mechanism upon the wiping web between the supply roll of same and the wiping or polishing platen to ensure against the wrinkling or creeping of the cloth during the wiping or polishing operation, but with a paper web the use of such a clamping mechanism has not only been found unnecessary but undesirable.

While in the past, I have used various grades and finishes of soft paper for wiping and polishing webs, I find that the best results can be secured by a heavy grade of rough soft paper such as is commonly used for toweling, since such appears to possess sufficient strength to be readily fed through the machine while withstanding the effect of the rubbing contact between same and the printing plate, and possesses sufficient absorptive power to remove the surface ink by capillary attraction, but sufficiently slowly to ensure that piling of the ink at the juncture of engagement of the wiping strip and the plate necessary to an adequate filling of the lines of the plate with ink. At the same time, this paper is not sufficiently flexible to be forced into the lines of the plate with a resultant extraction of any material portion of the ink from even the wider lines.

The invention consists in the novel steps and practices by which ink upon the top or non-printing surface of an engraved, intaglio or undersurface printing plate is in part packed in the lines of the design and excess ink is removed, and in the novel features of construction and combination of parts of the mechanism employed, all as hereinafter set forth and described and more particularly pointed out in the claims hereto appended.

Referring to the drawing,

Fig. 1 is a diagrammatic showing of the wiping mechanism of a rotary undersurface printing machine; and

Fig. 2 is a fragmentary portion of the paper wiping strip.

Like letters refer to like parts in both of said views. In practicing the method of the invention, I employ a continuous strip or web of flexible material having spaced projections on the surface thereof, in a manner to cause said projections to contact with the non-printing surface of the plate with a pressure sufficient to ensure the desired wiping action and avoid streaking of the non-printing surface of the plate by reason of the multitude of contacting areas.

The material used is a paper, the finish of which is similar to what is known as "crepe" paper, although the paper itself is of a stock sufficiently thick and strong to admit of the relative action between same and the plate, and the development of the desired pressure without mutilation of the web or strip. The ridges upon the paper extend generally transversely of the length of the web or strip, are of a comparatively short length and are spaced in relation to each other, both longitudinally and transversely of the strip or web. This lack of continuity in the line of engagement of the operative surfaces of the strip or web laterally thereof, permits the cleaning operation by a series of succeeding wiping actions

and affords space for the accumulation of the ink in advance of each ridge, desirable in filling the lines of the design with ink. Furthermore, the spaced points of contact preclude the development of suction in a manner to tend to lift ink from the lines.

The material of the strip or web is such as to impart to it low absorptive properties, essential to permit the use of a small quantity of ink as compared with that required when employing other methods and materials during the wiping operation incidental to the making of an impression.

Referring to the drawing, *a* indicates the plate cylinder of a rotary undersurface printing machine carrying two plates *b* and *c*. Associated with this cylinder is a cam *d*, having two risers *d'* and d^2, so positioned as to operate the wiper web feeding mechanism *e* following the wiping of each plate.

The inking mechanism is shown conventionally at *f*. The strip or web feeding mechanism *e* is shown merely conventionally, as are the paper web support *g*, the re-wind reel *h* and the means *i* operative upon said re-wind reel and acted upon by the web feeding mechanism.

In the accompanying drawing, I have shown merely a wiping mechanism, it being understood that, if desired, the various mechanisms herein described may be duplicated at a point where they will operate upon the plate between the wiping mechanism and the printing line. The wiping mechanism herein shown, comprises two platens *j* and *k*, suitably padded to have present in the platen the usual resiliency. Each of these platens is spring pressed toward the axis of the plate cylinder in the usual manner. Between the platen *j* and the support for the supply reel of the web is a guide roller *m*; between the platen *k* and the re-wind reel is a guide roller *n*, and between the two platens *j* and *k* is a guide roller *o*.

The supply roll of the paper web is indicated at *p*, and the portion of the paper from this web in its run through the re-wind reel is indicated at *p'*.

The wiping strip or web used is soft, absorbent paper stock, such as is commonly used for toweling, having a rough grained surface, the general direction of the graining being transversely of the strip or web. This paper must be of a thickness to resist the tearing strains thereon as a result of the rubbing contact of the plate thereover.

If the paper be not sufficiently absorptive it will, notwithstanding the usual lateral reciprocatory movement of the platens *j* and *k*, leave sufficient ink upon the non-printing surface of a plate to result in a streaky or smudgy imprint. If, on the other hand, the paper be too soft and too absorbent, it will fail to properly pack the lines of the plate and will, particularly as to the hair lines, pull some of the ink therefrom so that a sharp clear imprint cannot be secured. The grain should not be raised too high, as this will tend to the formation of wrinkles in the paper, which wrinkles will cause excessive thickness and compaction thereof within limited areas and result in an improper wiping of other portions of the plate than where these wrinkles engage.

I have used various kinds and weights of paper, but have found that the so-called paper toweling gives the best results, and I attribute this to the greater absorptive properties of this paper and the short, slightly raised graining effect. By advancing the wiping strip or web of paper only a short distance with each actuation of the feeding mechanism *e*, and having the portion of the paper passing to the platen *j* at a point where it will first engage a plate, I secure the advantage of first subjecting the plate to a portion of the wiping strip or web which has absorbed no ink, and thereafter subjecting it to portions of the strip or web which have progressively increased absorptive power by reason of their having already been partially saturated with ink as a result of the wiping of previous plates. The totally unsaturated portion of the paper will, throughout the wiping action of each plate, pick up the ink so slowly as to cause the piling thereof in advance of the platen and thus effectively pack the lines of the plate. The partially saturated portions of the strip or web of paper will absorb the ink much more rapidly than the totally unsaturated portion thereof, although the latter will be partially saturated upon the completion of the wiping of any plate.

In order to secure an effective wiping action by the paper, I have found it necessary to reduce the quantity of ink applied to a plate, since an over-supply of ink upon the nonprinting or top surface of the plate will have the effect of too rapidly saturating the paper so that an imperfect wiping results, and a smudgy, streaky imprint follows.

If the graining effect of the paper be too heavy, in addition to the tendency toward the formation of wrinkles, there will also be a tendency of the paper to stretch during the rubbing contact of the plate therewith which will interfere materially with the proper wiping or polishing action.

The general direction of the grain in the paper strip or web must be parallel with the axis of the plate cylinder to avoid streaking of the plate.

With the short graining of the paper the elevated portions will not extend continuously from edge to edge of the paper, but will be irregularly arranged in a general parallel relation to each other so as to preclude the presence of any channels extending parallel about the circumference of the plate for a sufficient distance to leave any unwiped streaks upon the plate.

To one skilled in the art, the general mode of operation will be readily understood.

After the making of each impression, each plate *b* or *c* has ink applied thereto by the rollers of the inking mechanism *f*, some of the ink entering the intaglio lines of the plate, and the rest of the ink remaining upon the top or nonprinting surface. As the plate leaves the inking mechanism, the forward edge engages that portion of the paper strip or web *p'*, passing over the platen *j*, which latter, by reason of its resiliency, conforms to the curvature of the plate and yields in the usual manner to control the pressure relation between the paper strip or web and the plate.

As heretofore stated, the first portion of the paper strip or web engaged by the forward edge of the plate will be clean or entirely unsaturated with ink, the length of this portion corresponding with the quantity of feeding movement of the strip or web with each actuation of the mechanism *e*. The succeeding portion of the paper strip or web engaged by the plate will be partially saturated, thus taking up ink more readily than does the clean portion of the strip or web.

After leaving the portion of the strip or web passing about the platen *j*, the plate engages the portion of said strip or web passing about the

platen *k*, which is more fully saturated than any portion of said strip or web passing about the platen *j*. With the continued movement of the plate in relation to the platen *j*, ink upon the non-printing surface of the plate will be accumulated at each changing point of juncture with the paper web or strip so as to afford a slight accumulation of ink, a considerable portion of which will be forced into the lines of the plate, and the remainder of which will be gradually absorbed by the strip or web.

By the time the rear edge of the plate passes the platen *j*, the first portion of the strip or web to be engaged by the plate will have absorbed the surplus ink not required for packing the lines. The more or less extended areas of the platens *j* and *k* are merely to ensure the complete removal of ink from the non-printing surface of the plate.

The presence of previously absorbed ink in the paper toward the end of the wiping action, and the pressure relation of the platen and the cylinder has the effect of restricting the pickup of the ink by the strip or web to the ink upon the top or non-printing surface of the plate, and the short irregular grain will check the development of any such suction as would tend to lift the ink from the lines of the plate, even the finer lines.

Immediately that the rear edge of the plate passes through engaging relation with the platen *k*, the riser *d'* of the cam *d* will actuate the mechanism *e* and thus draw paper from the roll *p* and advance the run *p'* thereof in the direction of movement of the plate, preparatory to the wiping operation upon the succeeding plate *c*. Upon the completion of the wiping of this plate, the riser d^2 of the cam *d* will again advance the strip or web in the same manner and to the same extent. In this manner, a clean short length of the paper strip or web is presented to the following plate after each inking. The quantity of this feeding movement is such that a considerable portion of the wiping is done by portions of the paper strip or web which have already been used to help wipe two or more plates.

It is not my intention to limit the invention to the precise details of construction shown in the drawing, it being apparent that such may be varied without departing from the spirit and scope of the invention.

Having described the invention, what I claim as new and desire to have protected by Letters Patent, is:—

1. A wiping mechanism for undersurface printing machines, embodying therein a support, a roll of a continuous strip or web of rough absorbent wiping paper rotatably mounted on said support, a wiping platen, guiding means for the paper strip between said support and said platen, a re-wind reel, guiding means for the paper strip between said reel support and said re-wind reel, an inking mechanism, and intermittently actuated means advancing said paper strip or web a distance less than the length of the plates to be wiped upon the disengagement of the plate from the strip or web.

2. A wiping mechanism for undersurface printing machines, embodying therein a support, a roll of a continuous strip or web of absorbent paper having a raised granular surface extending transversely of the strip or web rotatably mounted on said support, a wiping platen, guiding means for the paper strip between said support and said platen, a re-wind reel, guiding means for the paper strip between said reel support and said re-wind reel, an inking mechanism, and intermittently actuated means advancing said paper strip or web a distance less than the length of the plates to be wiped upon the disengagement of the plate from the strip or web.

3. A wiping mechanism for undersurface printing machines, embodying therein a support, a roll of a continuous strip or web of absorbent paper having a raised granular surface extending transversely of the strip or web rotatably mounted on said support, the graining of the paper consisting of short elevated portions irregularly arranged in a general parallel relation to each other, a wiping platen, guiding means for the paper strip between said support and said platen, a re-wind reel, guiding means for the paper strip between said reel support and said re-wind reel, an inking mechanism, and intermittently actuated means advancing said paper strip or web a distance less than the length of the plates to be wiped upon the disengagement of the plate from the strip or web.

4. The method of cleansing the ink surfaces of engraving plates and the like which consists in passing over the ink surface a flexible material having spaced projections on the surface thereof in such manner that the projections only contact the ink surface.

5. The method of removing undesirable ink from inky surfaces of engraving plates, cylinders, and the like which consists in relatively passing over the ink surface flexible material having a ridged surface of an absorbent nature, the ridges being spaced and the material operating on the inky surface with ridges only in engagement with the inky surface during relative movement of the flexible material over the inky surface.

6. The method of cleansing the inked surfaces of engraving plates and the like which consists in passing over the inked surface a flexible crepe like absorbent ink wiping paper having closely spaced raised projections thereon, in such manner that the raised projections only will contact with the inked surface.

PETER AITCHISON.