246617

PATENT APPLICATION FORM

COMMONWEALTH OF AUSTRALIA

Patents Act 1952

60 66 01

Regulation 9

I, JOHN COTEY
of 27 West End Avenue, Haddonfield, New Jersey 08033, U.S.A.

hereby apply for the grant of a Standard Patent for an invention entitled "FILLING VALVE FOR USE IN FILLING BALLOONS" which is described in the accompanying complete specification.

For a Convention application - details of basic application-

Number	Country	Date of Application
819,323	United States of America	July 2, 1986

Our address for service is ARTHUR S. CAVE & CO., Patent and Trade Mark Attorneys, Level 10, 10 Barrack Street, Sydney, New South Wales, Australia 2000.

DATED this 1st day of May, 1990.

JOHN COTEY
By His Patent Attorneys
ARTHUR S. CAVE & CO.

HECTOR CUMMING, F.I.P.A.A.

To:
Commissioner of Patents

ARTHUR S. CAVE & CO.
PATENT AND TRADE MARK ATTORNEYS
SYDNEY

ASC 1

APPLICATION ACCEPTED AND AMENDMENTS
ALL 16-11-90

1029M:AB

246617/FP

Regulation 12(2)

PATENT DECLARATION FORM (CONVENTION)

COMMONWEALTH OF AUSTRALIA

Patents Act 1952

DECLARATION IN SUPPORT OF A CONVENTION APPLICATION FOR A PATENT

In support of the Convention application made for a patent for an invention entitled: FILLING VALVES FOR USE IN FILLING BALLOONS

I, JOHN COTEY

of 27 West End Avenue Haddonfield New Jersey 08033 United States of America

do solemnly and sincerely declare as follows:-

1. I am the applicant for the patent.

2. The basic Application as defined by Section 141 of the Act was made in the following country or countries on the following date namely:-
in United States of America on 2nd July, 1986 by John Cotey

3. I am the actual inventor of the invention referred to in the basic application.

4. The basic application referred to in paragraph 2 of this Declaration was the first application made in a Convention country in respect of the invention the subject of the application.

Declared at this 8TH day of JANUARY, 1990.

To:
The Commissioner of Patents

Signature of Declarant

ARTHUR S. CAVE & CO.
PATENT AND TRADE MARK ATTORNEYS
SYDNEY

EUGENE F. RENZ, JR.
JAN 8 1989

1132W/AT

(12) PATENT ABRIDGMENT (11) Document No. AU-B-75079/87
(19) AUSTRALIAN PATENT OFFICE (10) Acceptance No. 606601

(54) Title
FILLING VALVE FOR BALLOONS

International Patent Classification(s)
(51)[4] F16K 015/20

(21) Application No. : 75079/87 (22) Application Date : 02.07.87

(30) Priority Data

(31) Number (32) Date (33) Country
881323 02.07.86 US UNITED STATES OF AMERICA

(43) Publication Date : 21.07.88

(44) Publication Date of Accepted Application : 14.02.91

(71) Applicant(s)
JOHN COTEY

(72) Inventor(s)
JOHN COTEY

(74) Attorney or Agent
ARTHUR S CAVE & CO, GPO Box 3876, SYDNEY NSW 2001

(56) Prior Art Documents
US 3616569
US 2924041
GB 1521012

(57) Claim

1. A valve assembly for filling a balloon having a neck, said valve assembly positioned in said neck, said valve comprising an elongated generally tubular body member having an upper section and a lower section divided by a transverse interior wall, a radially outwardly directed frusto-conical flange diverging downward toward the lower edge of the lower section forming a seal with a bead at the mouth of the balloon, at least one port communicating with the lower section and located above said flange and at least one upper opening in the side wall of the upper section spaced downwardly from the upper terminal edge thereof a predetermined distance, the ratio of the area of the upper opening to the port being in the range of 4.1:1 to 5.75:1, said balloon neck snugly embracing the exterior of said valve and normally preventing flow between

.../2

said port and upper opening and during filling defining an air chamber between said balloon neck and valve having two axially spaced annular seals between the balloon neck and said flange and upper terminal edge.

5005-P1/PRT/mmb/0420E.1

AUSTRALIA

PATENTS ACT 1952

COMPLETE SPECIFICATION

(ORIGINAL)

606601

FOR OFFICE USE

Application Number:
Lodged:

Complete Specification Lodged:
Accepted:
Published:

Priority:
Related Art:

This document contains the amendments made under Section 49 and is correct for printing.

TO BE COMPLETED BY APPLICANT

Name of Applicant: JOHN COTEY

Address of Applicant: 27 West End Avenue,
Haddonfield, New Yersey 08033
United States of America

Actual Inventor: JOHN COTEY

Address for Service: ARTHUR S. CAVE & CO.
Patent & Trade Mark Attorneys
Goldfields House
1 Alfred Street
SYDNEY N.S.W. 2000
AUSTRALIA

Complete Specification for the invention entitled FILLING VALVE FOR USE IN FILLING BALLOONS.

The following statement is a full description of this invention including the best method of performing it known to me:-

ASC 49

FILLING VALVE FOR USE IN FILLING BALLOONS

FIELD OF THE INVENTION

The present invention relates generally to balloons, and more specifically to a one-way valve to facilitate inflating the balloons through the valve.

BACKGROUND OF THE INVENTION

Balloon assemblies and valves of the type to which the present invention pertain are not new per se. A typical assembly and prior art valve is shown in the Litt et al U. S. Patent No. 3,616,569 issued November 2, 1971 and entitled BALLOON AND VALVE ASSEMBLIES AND SUPPLY THEREOF FOR DISPENSING MACHINE. The Jackson et al U. S. Patent No. 2,924,041 issued February 9, 1960 and entitled BALLOON is another example of the prior art. While these prior assemblies are generally effective for the purposes intended, it has been observed that they are not as effective as the valve of the present invention in terms of complexity and weight. A professional can fill a balloon faster and tie it off without a valve. The valve is only used by non-professional balloon venders. Furthermore, under some filling conditions, these prior valves tend to squeal which is objectionable.

The present invention provides a valve which is of relatively simplified construction so that it can be manufactured easily and economically. The valve has means for securely holding it in the neck of the balloon in a manner whereby it

resists separation when being inflated. The valve is also characterized by a novel port arrangement which minimizes fluttering and squealing during the filling process. The valve also lends itself to filling through conventional valves of various sizes. The valve of the present invention is designed for use by street vendors and the like generally considered as non-professional balloon vendors. The balloons in many cases are purchased for small children. It has been found that prior valves tend to squeal during the helium filling process and this tends to frighten children to a point where they associate bad things with the balloon and therefore, do not want it. The valve of the present invention eliminates this problem. Additionally, it has been found that filling balloons at high pressure, about 60 psi, intensifies the shrieking, squealing problem. It can be readily understood that persons filling large quantities for balloon release events can only sustain the shrill sounds for short periods of time.

The valve also has other desirable features. It can be made in a simple molding operation, is only one piece and therefore, is economical. It is lightweight, has no moving parts and can be used easily by very inexperienced persons. The valve has other uses such as inflating swimming pools or the like where filling is accomplished when air pressure is one and when pressure is turned off, there is no back flow.

In one broad form the present invention comprises a valve assembly for filling a balloon having a neck, said valve assembly positioned in said neck, said valve comprising an elongated generally tubular body member having an upper section and a lower section divided by a transverse interior wall, a radially outwardly directed frusto-conical flange diverging downward toward the lower edge of the lower section forming a seal with a bead at the mouth of the balloon, at least one port communicating with the lower section and located above said flange and at least one upper opening in the side wall of the upper section spaced downwardly from the upper terminal edge thereof a predetermined distance, the ratio of the area of the upper opening to the port being in the range of 4.1:1 to 5.75:1, said balloon neck snugly embracing the exterior of said valve and normally preventing flow between said port and upper opening and during the filling defining an air chamber between said balloon neck and valve having two axially spaced annular seals between the balloon neck and said flange and upper terminal edge.

AUSTRALIAN PATENT OFFICE LS

0354v:AB

BRIEF DESCRIPTION OF THE DRAWINGS

These and other objects of the present invention and the various features and details of the operation and construction thereof are hereinafter more fully set forth with reference to the accompanying drawings, wherein:

Fig. 1 is a perspective view of a valve constructed in accordance with the present invention prior to application to the neck of a balloon;

Fig. 2 is a sectional view taken on lines 2-2 of Fig. 1;

Fig. 3 is an enlarged sectional view taken on lines 3-3 of Fig. 2;

Fig. 4 is a longitudinal sectional view of the valve showing the neck of the balloon mounted in place on the valve prior to filling;

Fig. 5 is a view similar to Fig. 4 showing the flow of gas during the filling process; and

Fig. 6 is a transverse sectional view showing the balloon mounted in place on the valve and fully inflated.

DETAILED DESCRIPTION OF THE PREFERRED EMBODIMENT

Referring now to the drawing, there is illustrated a valve for filling balloons constructed in accordance with the present invention. The valve which is designated generally by the numeral 10 is adapted to be inserted into the neck 12 of a conventional balloon 14 so that it can be inflated to full size. The valve 10 retains the balloon in its inflated condition after the balloon has been inflated by gases under pressure such as a mixture of helium and air introduced into the balloon through the valve. Note that one end of the valve has means for securing a string 16 or the like thereby providing means by which the inflated balloon may be held by the user.

The valve 10, as illustrated, comprises an elongated, generally cylindrical body 20 which may be made by conventional molding process of a plastic material and is divided into an upper gas delivery section 22 and a lower gas supply section 24 at approximately its mid-point. The upper and lower sections are divided by a radially outwardly directed lip or flange 28 which is preferably an outwardly and downwardly depending frusto-conical lip or flange which forms an annular seat or pocket 30 to receive the bead 31 adjacent the outer terminal end of the neck 12 of the balloon to retain the balloon in place on the upper section of the valve in the manner shown in Figs. 4-6 inclusive.

The side wall of the lower section adjacent its lower free terminal end is of reduced cross section as at 32 to provide a more flexible area to snugly embrace the shaped gas supply valve head 34 which is typical of the filling heads utilized to fill the balloons. The upper and lower sections are divided by a transversely extending wall 36 which is generally aligned with the radially outwardly directed frusto-conical flange. A pair of diametrically opposed ports or openings 40 is provided in the side wall of the upper section 22 which, as illustrated, communicate with the lower section to act as a conduit for gas from the supply source to direct it from interiorly of the valve to the flexible toroidal-shaped

manifold formed by the pressurized, expanding balloon neck 12, as illustrated in Fig. 5, which redirects the gas flow through the series of ports or openings 42 in the side wall of the upper section 22, ultimately filling the balloon body, openings 42 are spaced downwardly from the upper terminal edge and in the present instance are six in number.

In accordance with the present invention, the particular configuration, orientation and arrangement of the openings 42 and ports 40 are instrumental in eliminating chattering and undesirable squealing during a balloon filling operation. More specifically, it has been found that the openings or ports 42 are spaced downwardly from the upper edge of the upper section a predetermined distance, preferably at least 3/32 inches. It has been observed that the total area of the ports 40 is about .009 inches^2 and that the total area of the ports 42 is about .042 inches^2. It is also preferred that the flow area of the ports 40 is in the range of .008 inches^2 and .010 inches^2 and the flow area of the ports 42 is in the range of .041 inches^2 and .046 inches^2. It has also been observed that chattering and attendant squealing to not occur when the flow area of the ports 42 relative to the flow area of the ports 40 is in the ratio of 4.7:1. It has been found that when the ports are disposed in the manner illustrated the desired toroidal manifold effect illustrated in Fig. 5 is achieved through the normal range of pressures that balloons are normally filled, that is 16 to 60 lb/in^2. Note that with this type of manifold effect, the neck of the balloon snugly embraces the side wall of the upper section of the valve in the region above the ports 42 thereby preventing chattering and the consequent objectionable squealing during the filling operation.

Note that the base wall 36 is aligned with the exterior flange and has a raised radially extending section 50 defining a cross manifold 54 for the lower ports 40. A series of circumferentially spaced, axially extending ribs 56 are provided on the interior of the base section which serve to prevent the gas nozzle from actually making contact with cross channel 54 and destroying gas flow. They are in effect nozzle stops to prevent the inexperienced vendor from forcing the gas injection nozzle too far into the valve.

While a particular embodiment of the invention has been illustrated and described herein, it is not intended to limit the invention and changes and modifications may be made therein within the scope of the following claims.

The claims defining the invention are as follows:

1. A valve assembly for filling a balloon having a neck, said valve assembly positioned in said neck, said valve comprising an elongated generally tubular body member having an upper section and a lower section divided by a transverse interior wall, a radially outwardly directed frusto-conical flange diverging downward toward the lower edge of the lower section forming a seal with a bead at the mouth of the balloon, at least one port communicating with the lower section and located above said flange and at least one upper opening in the side wall of the upper section spaced downwardly from the upper terminal edge thereof a predetermined distance, the ratio of the area of the upper opening to the port being in the range of 4.1:1 to 5.75:1, said balloon neck snugly embracing the exterior of said valve and normally preventing flow between said port and upper opening and during filling defining an air chamber between said balloon neck and valve having two axially spaced annular seals between the balloon neck and said flange and upper terminal edge.

2. A valve assembly as claimed in claim 1 wherein said ratio of the area of the upper opening to the port being substantially 5:1.

3. A valve assembly as claimed in claim 1 or claim 2, including a series of circumferentially spaced, axially extending ribs on the interior wall of the lower section.

4. A valve assembly as claimed in claim 1 or claim 2 wherein the side wall of the lower section is stepped and of smaller cross section adjacent the lower portion thereof.

5. A valve assembly for filling a balloon as herein described and with reference to any one of the drawings.

DATED this 31st day of October, 1990.

JOHN COTEY
By His Patent Attorneys
ARTHUR S. CAVE & CO.

AUSTRALIAN PATENT OFFICE LS

75079/87

FIG. 1.

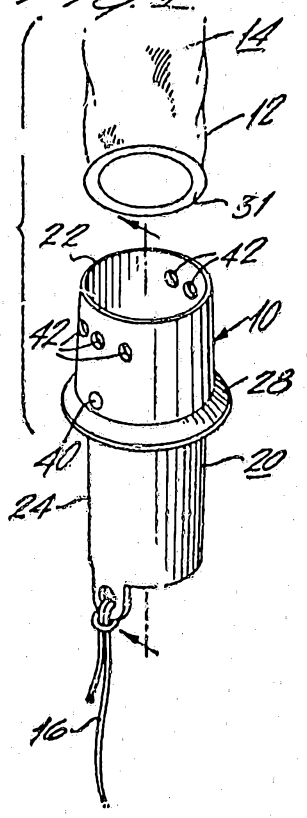

FIG. 2.

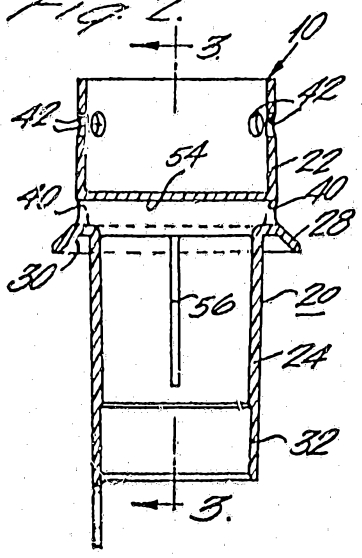

FIG. 3.

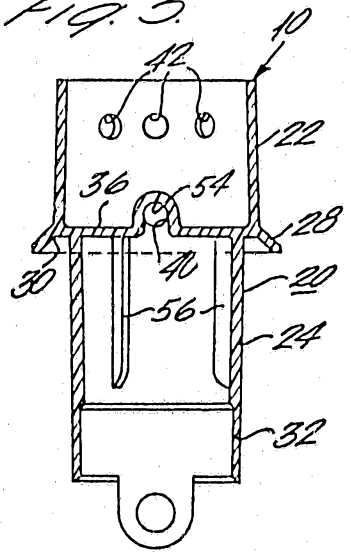

FIG. 4.

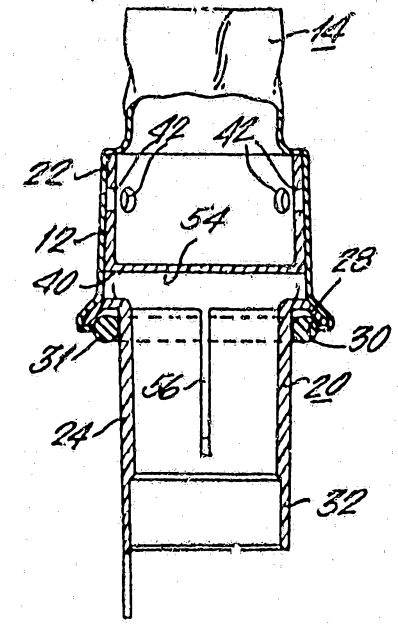

FIG. 5.

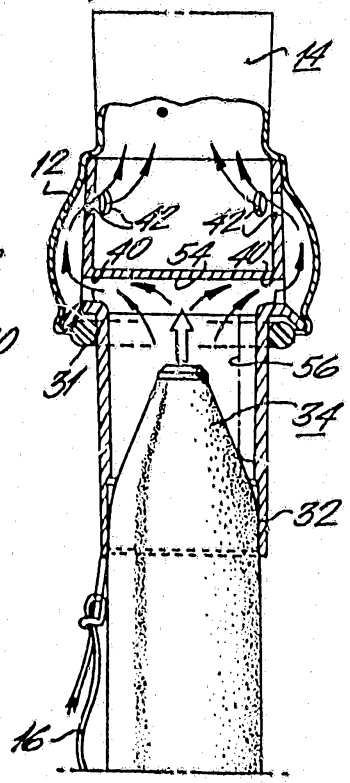

FIG. 6.

