No. 696,041. Patented Mar. 25, 1902.

M. A. HEIMANN.

SHOW CASE.

(Application filed Aug. 9, 1901.)

(No Model.)

Fig.1.

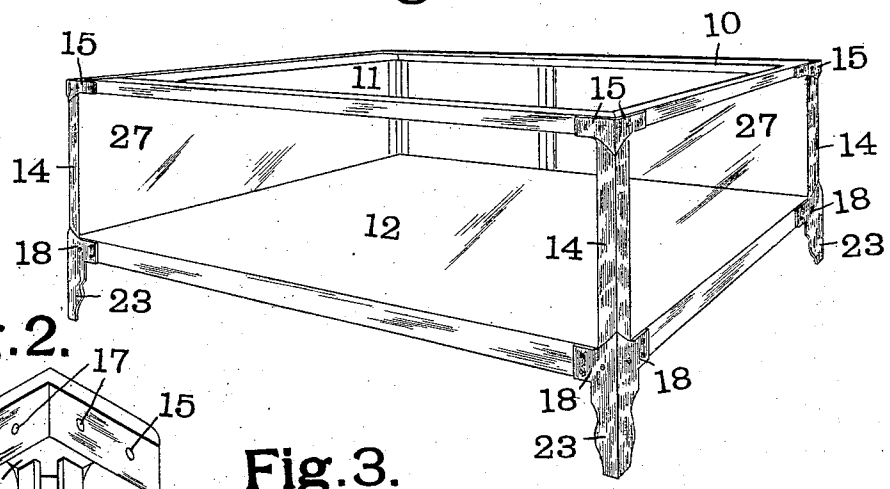

Fig.2.

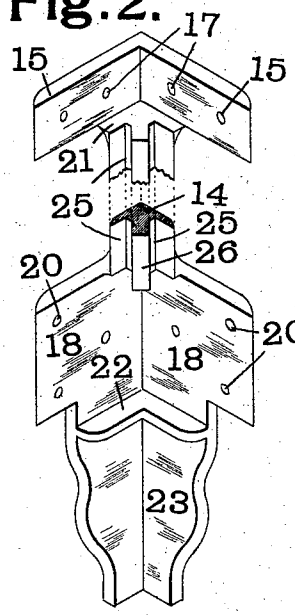

Fig.3.

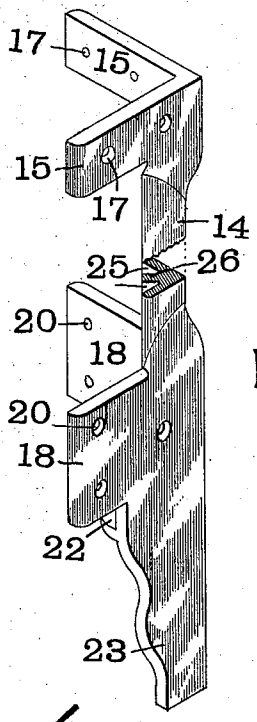

Fig.4.

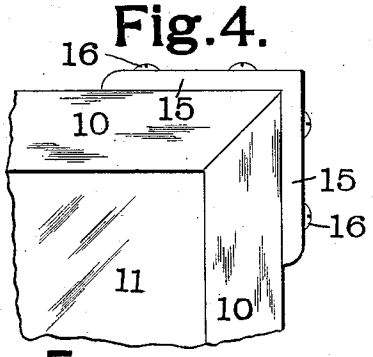

Fig.5.

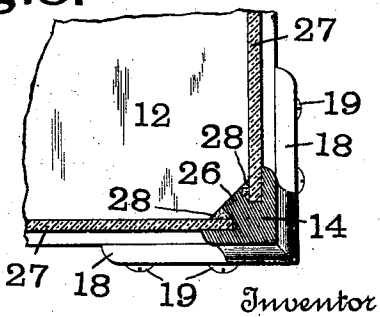

Witnesses

W. A. Alexander

Jessie R. Watkins.

Inventor

M. A. Heimann

By Attorneys Fowler & Bryson.

THE NORRIS PETERS CO., PHOTO-LITHO., WASHINGTON, D. C.

UNITED STATES PATENT OFFICE.

MORRIS A. HEIMANN, OF ST. LOUIS, MISSOURI.

SHOW-CASE.

SPECIFICATION forming part of Letters Patent No. 696,041, dated March 25, 1902.

Application filed August 9, 1901. Serial No. 71,482. (No model.)

To all whom it may concern:

Be it known that I, MORRIS A. HEIMANN, a citizen of the United States, residing at the city of St. Louis, in the State of Missouri, have invented a certain new and useful Show-Case, of which the following is such a full, clear, and exact description as will enable any one skilled in the art to which it appertains to make and use the same, reference being had to the accompanying drawings, forming part of this specification.

One object of my invention is to so construct a show-case that it can be readily packed for shipping and can be secured together without the use of glue or any other means which would require the employment of a skilled workman.

Another object of my invention is to simplify and cheapen the construction of show-cases.

Still another object of my invention is to produce a show-case which will be neat and attractive in appearance.

My invention consists, in part, in the combination, with a top and a bottom, of a pair of wings for attachment to said top, a second pair of wings for attachment to said bottom, an inward offset portion connecting said pairs of wings and supporting said top, and grooves in said offset portion for receiving the side glasses of said show-case.

My invention also consists in various other novel features and details of construction, all of which will be described in the following specification and pointed out in the claims affixed hereto.

In the accompanying drawings, which illustrate one form of show-case made in accordance with my invention, Figure 1 is a perspective view of the complete case. Fig. 2 is an isometric projection of one of the corner-pieces, the middle portion being broken away. Fig. 3 is a view similar to Fig. 2, but looking at the corner-piece in a different direction. Fig. 4 is a top plan view of one corner of the case, and Fig. 5 is a horizontal section through one of the corners of the case.

Like marks of reference refer to similar parts in the several views of the drawings.

The top of the case is preferably formed of a wood frame 10 and a glass 11, carried by the said frame 10. The bottom 12 may be of any desired construction, preferably of wood. The top 10 and bottom 12 are carried by metal corner-pieces 14. Each of the corner-pieces is provided with two integral wings 15, which are secured to the top 10 by means of screws 16, passing through holes 17 in the said wings 15. Each of the corner-pieces 14 is also provided with a second pair of wings 18, which are secured to the bottom 12 by means of screws 19, passing through holes 20 in said wings 18. The upper wings 15 are so arranged that the top of the body portion of the corner-piece 14 will form an offset 21, on which the top 10 rests, thus taking the weight of the top off of the screws 16. Below the lower wings 18 is formed an offset 22, on which the bottom 12 rests, so as to take the weight of the said bottom off of the screws 19. Projecting below the offset 22 is a foot 23, which is formed integral with the corner-piece 14. The central or body portion of the corner-piece 14 is provided with two grooves 25, between which is a projecting rib 26. The grooves 25 are adapted to receive the edges of the glass 27, which forms the sides and ends of the show-case. The glass 27 is preferably secured in the grooves 25 by means of putty 28, as shown in Fig. 5.

It will be evident that in shipping my show-case the bottom and top, together with the glass sides and ends, can be packed flat, and when it is desired to assemble the parts of the show-case the corner-pieces are first attached to the bottom by means of the screws 19. The side glasses are then inserted by sliding them downward into the grooves 25, where they will be held in position by the rib 26 and, if desired, may be sealed with putty 28. After the side glasses are in position the top of the show-case may then be placed upon the offsets 21 and secured in position by the screws 16.

My show-case while strong and durable is neat in appearance and being simple in construction and consisting of but few parts can be manufactured for a small cost.

Having fully described my invention, what I claim as new, and desire to secure by Letters Patent of the United States, is—

1. In a show-case, the combination with a top and a bottom, of a pair of wings for attachment to said top, a second pair of wings for attachment to said bottom, an inwardly-

offset portion connecting said pairs of wings and supporting said top, and grooves in said offset portion for receiving the side glasses of said show-case.

2. In a show-case, the combination with a top and a bottom, of a pair of wings for attachment to said top, a second pair of wings for attachment to said bottom, an offset formed integral with said pairs of wings and supporting said top, grooves in said offset portion for receiving the side glasses of said show-case, and a second offset portion for supporting said bottom and situated below said first-named offset to form a pocket for the reception of said bottom.

3. In a corner-piece for show-cases, a grooved portion for receiving and retaining in position the show-case side glasses, a pair of vertically-disposed wings carried by the upper end of said grooved portion and formed integral therewith, said wings being so placed as to leave a free passage for the downward insertion of said side glasses, and a second pair of wings carried by the lower end of said grooved portion.

In testimony whereof I have hereunto set my hand and affixed my seal in the presence of the two subscribing witnesses.

MORRIS A. HEIMANN. [L. S.]

Witnesses:

LOUIS ROSENBERG,

W. A. ALEXANDER.