Jan. 25, 1938. W. E. SHERBONDY 2,106,577

DISPENSING RECEPTACLE FOR PLASTIC SUBSTANCES

Filed Dec. 16, 1935 2 Sheets-Sheet 1

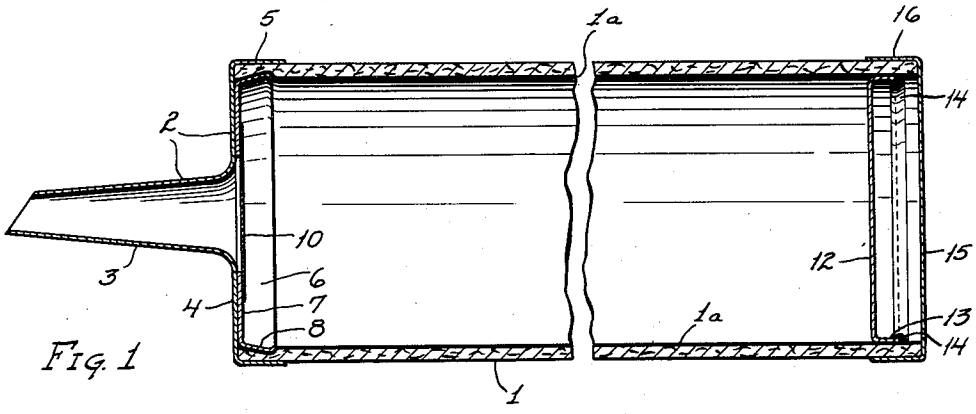

FIG. 1

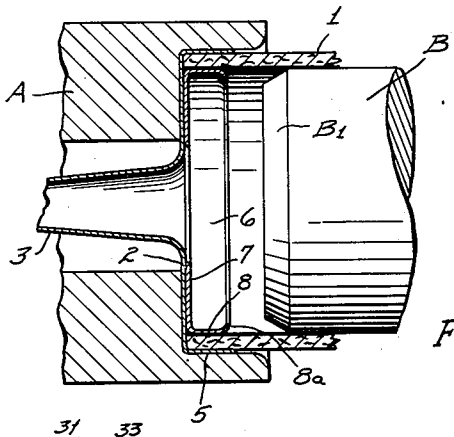

FIG. 2

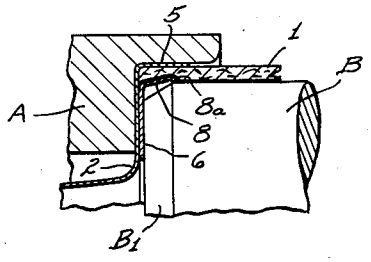

FIG. 3

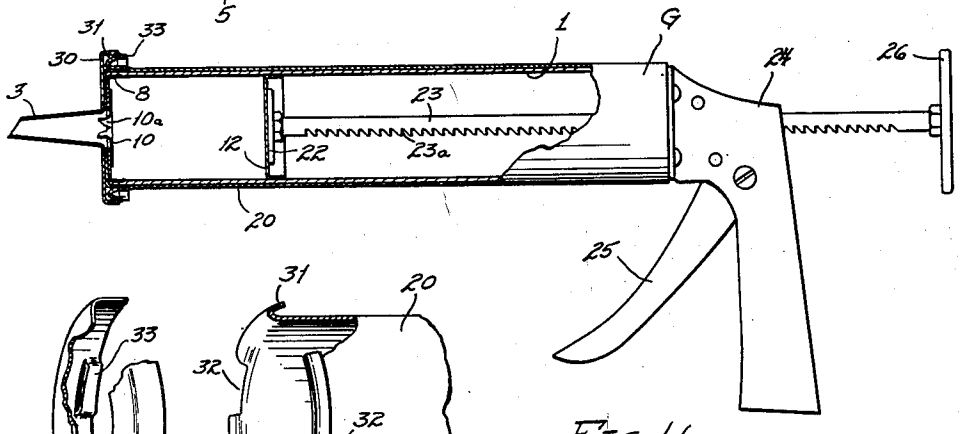

FIG. 4

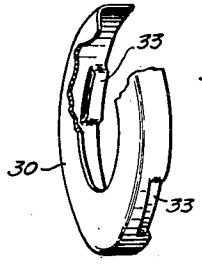

FIG. 5

FIG. 6

INVENTOR.

WILLIAM E. SHERBONDY

BY

Bates, Golrick, & Teare

ATTORNEYS

Jan. 25, 1938. W. E. SHERBONDY 2,106,577

DISPENSING RECEPTACLE FOR PLASTIC SUBSTANCES

Filed Dec. 16, 1935 2 Sheets-Sheet 2

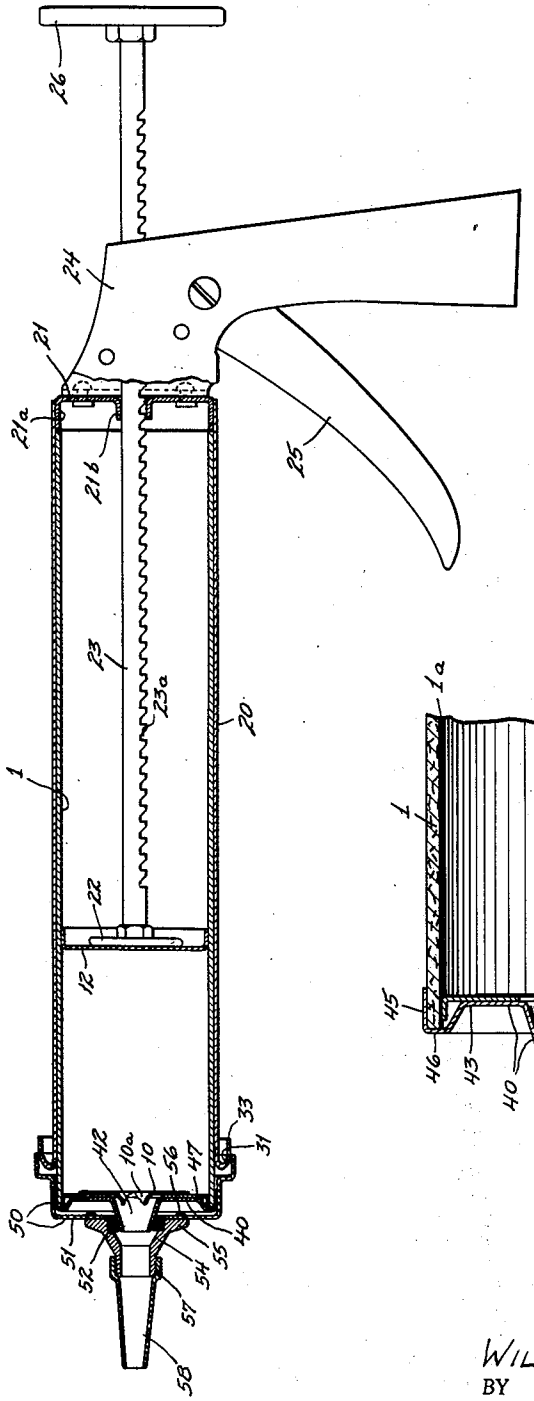

FIG. 8

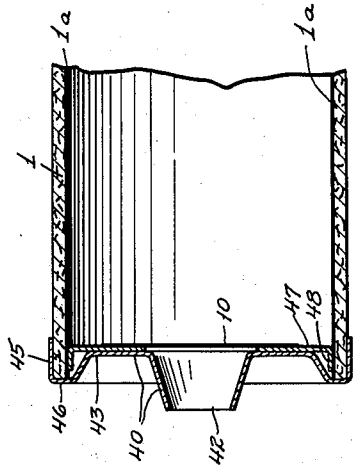

FIG. 7

INVENTOR.

WILLIAM E. SHERBONDY

BY

Bates, Golwick, & Teare

ATTORNEYS

Patented Jan. 25, 1938

2,106,577

UNITED STATES PATENT OFFICE

2,106,577

DISPENSING RECEPTACLE FOR PLASTIC SUBSTANCES

William E. Sherbondy, Shaker Heights, Ohio

Application December 16, 1935, Serial No. 54,616

16 Claims. (Cl. 221—78)

This application is a continuation, in part, of my application Serial No. 36,547, filed August 16th, 1935. The invention relates to a dispensing receptacle or container for plastic substances, such as caulking material, heavy greases and the like.

An object is to provide a dispensing receptacle having advantages over prior devices of its class, with respect to shipping and handling various plastic substances, and to dispensing the same.

A specific object is to provide an improved end sealing arrangement for a tubular dispensing receptacle.

A further object is to provide an improved end closure for a tubular receptacle, wherein the closure or part of it is adapted and arranged to serve as a piston for ejecting plastic material from the receptacle.

Other novel aspects of the invention relate to the method of forming an end closure for a tubular container body made of paper or similar inexpensive light-weight and/or more or less compressible material.

Further objects and features will become apparent from the following description relating to the accompanying drawings showing one practical embodiment.

Referring briefly to the drawings, Fig. 1 is a central longitudinal sectional fragmentary view of the dispensing receptacle; Figs. 2 and 3 are detail sectional views illustrating proposed tools for forming part of an end closure for the main body portion of the receptacle; Fig. 4 is a fragmentary longitudinal sectional view of a suitable holder or gun device, in which the receptacle hereof may be mounted to effect the dispensing operation; Figs. 5 and 6 are fragmentary perspective views, partly broken away, to show details of the construction of the muzzle portion of such gun; Fig. 7 is a fragmentary central sectional view of the discharge end of a modified dispensing receptacle, and Fig. 8 is a view similar to Fig. 4, showing the dispensing receptacle, according to Fig. 7, mounted in a gun or holder device which is also appropriately modified.

Referring to Fig. 1, the tubular body of the receptacle, indicated at 1, and hereinafter referred to as the tube, is preferably made of paper stock, and may be constructed as mailing tubes generally are. The tube may, instead, comprise any other light-weight, inexpensive and preferably compressible material having adequate strength to resist a considerable amount of internal pressure applied to the plastic contents of the tube. The tube may be of any convenient length, is cylindrical in shape, as shown, and both ends are open. The entire inner surface of the tube 1 has an impervious layer, represented at 1*a*, for preventing the plastic contents of the tube from penetrating the body structure of the tube. This impervious layer preferably comprises a membrane, such as "Glassine", adhering to the tube surface through the medium of an applied film, preferably shellac.

In the form shown in Fig. 1, the closure for the front end of the tube, that is, the end through which the plastic contents are to be discharged, comprises, in part, a disc-like cap member 2, say of sheet metal, which may have a hollow spout or applicator 3 on one side of its transverse wall portion 4. The cap has a substantially cylindrical flange 5 projecting in the direction opposite the spout, and the flange fits tightly over the end of the tube 1 in the manner illustrated.

The opposite or rear end of the tube 1 is shown as closed by a movable end closure member 12 and additionally by an outside cap member 15, which parts and their functions will be more fully hereinafter described.

Referring further to the discharge end, it will be noted that inside of the tube 1 and adjacent the cap 2 there is a cup-shaped disc 6, say of sheet-metal, the body portion 7 of which is in face-to-face contact with the body of the cap, and which is apertured opposite the opening in the spout. The disc has a flange 8 lying inside the tube. The front end margin of the wall of the tube 1 is pressed inwardly by the flange 5 of the cap member 2, and outwardly by the flange 8 of the disc 6; in other words, is tightly and continuously pinched between the two flanges, thereby sealing the receptacle at the discharge end against the passage of plastic material therefrom except through the apertures especially provided for its egress.

This sealing arrangement does not require any special shape of flange on the inner member or, in fact, any flange at all, providing the inner member has adequate peripheral surface and the necessary rigidity to effect the above mentioned function. The purpose and advantage of the special flange will be discussed below.

The end closure, just described, preferably includes a frangible disc 10, say of paper, which may be pasted or otherwise secured on either side of the disc 6 over the opening therein, or on the inner side of the cap, to normally block passage of plastic material through the discarge opening. This frangible disc may be fractured in any suitable manner, as by a nail or pencil, thrust into

and through the spout just prior to use of the receptacle for dispensing; or the disc 10 may be fractured by pressure on the contents of the tube incident to dispensing the same. The disc 10 is shown as fractured at 10*a*, Fig. 4.

It is, of course, desired that the joint at the discharge end of the receptacle be especially strong because pressure is concentrated at this region during the dispensing operation. Accordingly, the radial pressure on the margin on the tube 1 is, as shown, increased by radially distorting the flange of the member 6 after assembling the same into the tube. The free edge 8*a* of the flange 8, as shown in Fig. 2, is made slightly rounded, so that said edge extends inwardly toward the axis of the tube from the general peripheral surface of the flange. This facilitates inserting the member 6 into the tube because it avoids likelihood of scuffing the inner surface of the tube, as might a truly cylindrical flange.

After the members 2 and 6 have been placed on and in the end of the tube, the assembled parts may be placed in a suitable holder, such as a hollow block A, Fig. 2, and the rounded edge portion of the flange 8 expanded and at least partially straightened by a suitable tool. Such tool, as shown, comprises a bar B having a rounded or frusto-conical end surface B1, which bar may be thrust into the tube from its opposite open end. As the frusto-conical surface B1 passes the free inturned edge of the flange (see Fig. 3) the flange is somewhat straightened and substantially the entire flange is pressed outwardly so as to continuously indent the material of the tube 1, as shown in Figs. 1 and 3, tightly compressing the material of the tube against the flange 5 of the cap 2 which latter flange is or may be reenforced by the holder and prevented from spreading during the operation described.

Referring again to the closure for the rear end of the tube 1, Fig. 1, the end closure member 12 lies inside the tube and has a flange at 13, the free edge of which is directed rearwardly. The central body portion of the member 12 is imperforate and that of the member 15 preferably is.

The member 12 is designed to act as a piston whereby substantially the entire contents of the tube may be expressed through the spout 4, as by the use of a suitable plunger in a supporting gun device, or otherwise. The member 12, is, of course, inserted after the plastic material (not shown) is placed in the tube, and if pressed from sheet metal in the usual way there is a slight radius joining the central body and the flange, and the radius facilitates insertion of the member 12 into the tube.

After the closure member 12 has been inserted (say to the position shown, wherein the free edge of the flange lies inwardly from the rear end of the tube) the exposed inner marginal surface of the tube receives a sealing application of material preferably shellac, as indicated at 14. This may be applied so that it hardens to form a band or ribbon adjacent the free edge of the flange on the closure member 12, preventing the same from being accidentally dislodged and assisting in preventing the plastic contents of the tube from being squeezed out from between the inner closure member and tube wall, say during rough handling of the receptacle.

The outside closure member 15 is, as shown, in the nature of a cap, the construction of which may be identical with that of the member 12, but, of course, larger so as to fit over the tube instead of inside it. The flange 16 of the member 15 fits the tube opposite the closure member 12, tightly enough so that the members 12 and 15 mutually act to compress between them the material of which the tube 1 is composed. This arrangement, together with the seal 14, is always adequate to hold the plastic contents of the tube against exuding from the thus closed end of the receptacle, notwithstanding a very considerable amount of abuse in handling, and notwithstanding wide variations in temperature. High temperatures, for instance, would tend to lower the viscosity of the plastic contents and increase the burden of the closure.

A suitable type of gun or holder for the dispensing receptacle hereof is shown in both Figs. 4 and 8. Fig. 8 shows substantially the same gun as shown in Fig. 4, but on a somewhat larger scale. The only difference in construction relates to the muzzle portion; the muzzle portion in Fig. 4 being particularly adapted to serve for the form of receptacle shown in Fig. 1 and that of Fig. 8 being adapted to serve in connection with the form of receptacle shown in Fig. 7.

The gun has a barrel 20, which is open at its muzzle end to receive the loaded or charged dispensing container, above described. The rear end closure cap 15 is, of course, taken off the tube 1 to condition the container for mounting it in the gun. The barrel 20 may be formed from a suitable length of metal tubing. In the breech end of the barrel, as shown in Fig. 8, there is a breech closure member 21, having a peripheral flange 21*a* fitting inside the metal tubing and appropriately secured to it as by welding. The forward extremity of the flange 21*a* serves as an abutment for engaging the end of the tube 1 of the receptacle, as shown in Fig. 8. The central portion of the breech member 21 is tubularly formed, as at 21*b*, to provide a guide for the operating rod 23 of a suitable plunger 22.

The plunger 22 is appropriately shaped for engagement with the inside rear-end closure member 12 of the receptacle, so that the latter may be shoved through the receptacle in the manner of a piston for ejecting the plastic contents from the tube. A suitable stock or handle for the gun is indicated at 24, and this may be secured, as by suitable rivets, to the breech member 21.

The actuating mechanism of the gun may include a lever 25 in the nature of a trigger. This trigger-lever may have a releasable ratchet and pawl connection with the operating rod of the plunger, such connection being shown in my above identified application. The rod, as herein shown, has ratchet teeth 23*a* for engagement with such actuating mechanism. The rod 23 may have an appropriate handle 26, at its outer end, by which the plunger 22 may be returned to initial position (within or adjacent the breech member 21), after the receptacle has been emptied.

The muzzle of the gun barrel is provided with suitable means for abutting the front end of the receptacle to hold the same in the gun during the discharge of the plastic contents through the spout. Such means as shown comprises a flanged sheet-metal ring 30, having in effect a bayonet lock connecting with the muzzle, such as illustrated in Figs. 5 and 6. These views, taken with Fig. 4, show a curved flange 31 on the end of the barrel, cut away on opposite sides as at 32, to provide entranceways for radially indented formations 33 on the flange of the ring 30, so that when said formations pass the entranceways and the ring is then turned through an appro-

priate angle, the ring is locked on the barrel. The formations 33 may have slightly inclined inner edges for engagement behind the flange, as is usual in devices of this character for drawing the ring tightly against the barrel and/or the receptacle hereof.

Referring now to Figs. 7 and 8, it will be noted in Fig. 7 that the discharge end closure arrangement for the receptacle differs from the previously described construction in that the cap 40, (corresponding in effect to the cap 2 of Fig. 1) has a relatively short and tapered central discharge spout effect formed thereon as at 42, the disc-like body being relatively indented as at 43 and the tube embracing flange 45 being part of an annular rib effect 46, a portion of which lies inside the end margin of the tube. The flange 45 fits tightly over the end of the tube.

The depressed body 43 of the cap member 40 seats on an inner closure cap 47, (corresponding in effect to the member 6 of the previously described construction) but having a flange 48 which is turned outwardly instead of inwardly, so that insertion of the member 47 into the end of the tube 1 is facilitated. The flanges 45 and 48 of the respective cap members cooperate in pinching the wall of the tube 1 so as to effect a tight seal. The disc-like body of the inner cap member 47 has a central aperture aligned with the short spout effect 42, and this aperture is normally sealed, as in the previously described construction, by a breakable disc 10.

Referring now to the muzzle portion of the gun, Fig. 8, it will be noted that the gun is provided with a detachable end cap 50, which functions essentially as does the ring member 30 of Fig. 5. The member 50 has a bayonet lock type of connection with the flanged end of the barrel 20, and this may be identical with the connection illustrated in Figs. 5 and 6, the parts being similarly indicated.

The transverse wall 51 of the cap member 50, instead of abutting the end of the dispensing receptacle, is provided with a sealing gasket, as of rubber, shown at 52, and this is suitably shaped to sealingly embrace the spout effect 42 when the cap 50 is attached to the gun barrel. It will be remembered that the tube 1 is limited in its rearward movement as by abutting the flange 21*a* of the breech closure 21, so that the gasket material is certain to be compressed by the spout effect when the cap 50 is in final position.

The sealing gasket 52 is preferably contained in a suitable circular recess in a flanged sleeve 54, the flange 55 of which may be rigidly secured to the body 51 of the cap 50, as by projections 56, which enter respective openings in the transverse wall of the cap and which may be riveted over to hold the sleeve 54 in place. The sleeve 54 has external threads, as at 57, on which may be interchangeably mounted hollow spout extension members, one of which is illustrated at 58. These may be of any suitable form and length. It will be seen that the arrangement shown in Figs. 7 and 8 facilitates making the principal parts of the closure device as respective single metal stampings, reference being made, of course, to the members 40 and 47, and that because the spout effect at 42 is short, the dispensing receptacle may be packed in a smaller space and may be handled with less danger of damaging the discharge end of the receptacle. Moreover, the arrangement permits a great variety of spout extensions to be easily attached. The spout extensions 58 may be of any conceivable shape.

The manner of operation of the above described apparatus is obvious from the above description and inspection of the drawings.

It will be seen that the receptacle is extremely simple in construction, and may be made sufficiently inexpensively so that after the plastic contents are discharged, the entire receptacle may be discarded without any substantial loss. Further, notwithstanding the fact that the tube 1 is of more or less frangible material and can easily be collapsed when emptied, it is sufficiently reinforced by the plastic contents of the tube so that damage in shipment or handling is extremely unlikely to occur. The closure arrangements at the two ends, while very simple, have been found extremely satisfactory from the standpoint of shipping and handling, as well as dispensing. The container represents a considerable improvement in the class of apparatus exemplified thereby, it being the usual method to load the plastic material directly into the barrel of a dispensing gun which loading operation is extremely timetaking and after the material has been dispensed from the gun, it is very difficult to clean the gun for a subsequent operation. The latter disadvantage is particularly true after the gun has been standing for only a short time. With the present system there is practically no chance of any of the plastic contents of the tube coming into contact with the gun, or the hands or clothing of the operator.

With respect to the "Glassine" liner attached to the fibrous body material of the tube, as with shellac, this very effectively prevents the passage of fluid or plastic hydrocarbon materials to the outer fibrous body. The shellac alone is effective for the above stated purpose and in cases where a continuous film of shellac is easily maintained on the surface of the tube material, the same may be used alone (without the "Glassine" e. g. film) depending on the character of the material forming the tube, that is, depending on its capacity to absorb the shellac.

I claim:

1. In a dispensing receptacle for plastic material, a tube of relatively yieldable material, rigid annular means, having a flange peripherally and continuously embracing one end of the tube and directly engaging the yieldable material thereof, and closure means concentric with the aforesaid means and disposed inside the tube radially opposite the annular means, the radial distance between the two means being less than the thickness of the tube wall whereby the material of the tube is radially squeezed and compressed between the two means to form a seal.

2. A dispensing receptacle for plastic material, comprising a tube of compressible material, both ends of which are normally substantially closed by wall members inside the tube, and means embracing the tube radially opposite the respective members and compressing the material of the tube thereagainst, one of the members having a dispensing opening for egress of the plastic material, the other said member sealingly fitting the tube when moved substantially its entire length.

3. A dispensing receptacle, comprising an elongated tube of relatively yieldable material, a closure device marginally telescoping one end of the tube and having a dispensing opening, means radially compressing the material of the end of the tube against the closure device to form a peripheral seal, said means and closure device being continuously spaced from each other a dis-

tance less than the thickness of the wall of the tube, and means to close the opposite end of the tube.

4. In a dispensing receptacle for plastic material, a paper tube, a cap having a flange embracing one end of the tube, a movable wall located in the same end radially opposite the flange and adapted to serve as a piston in ejecting material from the tube, the paper tube, in the initial position of said wall, being continuously compressed between the flange and said means to form a peripheral seal.

5. In a dispensing receptacle, an elongated substantially cylindrical tube of relatively compressible material, open at its end, a closure device located interiorly of the tube at said end, a cooperating device externally of the tube radially opposite the aforesaid closure device and continuously spaced from the closure device a distance less than the thickness of the wall of the tube, whereby peripherally and continuously to compress the material of said end of the tube against the closure device, and a hollow dispensing spout carried by one of said devices and projecting outwardly from the tube.

6. A dispensing receptacle comprising an elongated tube of relatively light compressible material, a closure device for one end of the tube, having a dispensing spout thereon and having a flange continuously embracing the end of the tube, a separate device inserted inside the tube opposite the flange and continuously spaced from the flange a distance less than the thickness of the wall of the tube, thereby compressing the wall of the tube against the flange to form a seal, and a movable wall member closing the opposite end of the tube and utilizable as a piston to express the contents of the tube through the spout.

7. In combination with a tubular container body made of relatively yieldable material, substantially non-yielding means peripherally embracing one end of the body, a flanged member adapted to be slid into the body from the same end, the flange having an inturned rounded edge for facilitating insertion thereof into the body, said rounded edge being embedded outwardly radially in the body material in a manner to compress it against the relatively non-yielding means.

8. In a dispensing receptacle, an elongated tube of compressible material, a cap having a discharge opening, and a flange continuously embracing one end of the tube, annular means inside of the tube opposite the flange, said means and flange compressing the material of the tube between them to form a peripheral seal, and a pliable, frangible web extending across and normally closing the discharge opening.

9. In a dispensing receptacle for plastic materials, an elongated tube of relatively yieldable material, a closure device with an axially extending flange for one end of the tube, telescopingly fitting within the same when moved substantially the entire length of the tube, whereby the closure device may be used as a piston for ejecting the plastic contents of the tube, and relatively non-yielding means peripherally embracing the tube radially opposite the said device and forcing the wall of the tube tightly against the peripheral surface of the flange.

10. In a dispensing receptacle for plastic material, a tube, an inner closure device for one end of the tube adapted to tightly peripherally engage the tube wall inwardly from said end, and a continuous ribbon of sealing material lying inside the tube adjacent the periphery of the device and adhering to the inner marginal surface of the tube.

11. In a dispensing receptacle for plastic material, a body formed of a paper tube having lining means impervious to the passage of the plastic material therethrough, an inner closure disc for one end of the tube adapted to serve as a piston in ejecting the plastic contents of the tube therefrom, and a band of sealing material adhering to the inner marginal surface of the tube adjacent the outer surface of the disc.

12. In apparatus for dispensing plastic material, a tube having an end closure provided with a discharge opening, a holder for the tube, and means mounted in the holder arranged to effect a compressible seal continuously about the opening, said means including means abutting the opposite end of the tube and maintaining the sealing means in compression.

13. In apparatus for dispensing plastic material, comprising a tube having an end closure provided with a hollow tapered discharge member, a holder for the tube having an end wall adapted to support a discharge spout, and a compressible gasket radially interposed between the discharge member and end wall, and means on the holder abutting the opposite end of the tube to maintain said gasket peripherally compressed between opposite surfaces of the discharge member and end wall when the tube is mounted in the holder adjacent said end wall.

14. In apparatus for dispensing plastic material, a tube having an end closure provided with an outwardly projecting tapered discharge device, a holder for the tube, and a detachable end wall member for the holder, said member having a sleeve in alignment with the discharge device, and an annular gasket carried by the sleeve arranged to peripherally embrace the tapered discharge device as a seal when the end wall member is attached to the holder.

15. A dispensing receptacle comprising an elongated tube of relatively light compressible material, a spout device associated with one end of the tube, means for closing the opposite end of the tube comprising a wall member inserted into the tube and carrying an axially extending peripheral flange which fits the tube throughout substantially its entire length, and means externally of the tube radially opposite said wall member and continuously spaced therefrom a distance less than the thickness of the walls of the tube whereby to compress the material of the tube continuously against the peripheral surface of said flange and normally hold the same against movement in the tube.

16. In a receptacle of the class described, said receptacle comprising a tube having a dispensing spout at one end, a closure member in the opposite end of the tube having an axially extending flange portion continuously circumferentially engaging the inner wall of the tube, said member being slidable from one end of the tube to the other to express its contents through the spout, a cooperating member continuously externally embracing and squeezing the tube radially opposite the closure member, said cooperating member having a wall extending in abutting relation to the end of the tube.

WILLIAM E. SHERBONDY.