US 20130302179A1

(19) United States

(12) Patent Application Publication

(10) Pub. No.: US 2013/0302179 A1

(43) Pub. Date: Nov. 14, 2013

Bergholz, JR. et al.

(54) **TURBINE AIRFOIL TRAILING EDGE COOLING HOLE PLUG AND SLOT**

(76) Inventors: **Robert Frederick Bergholz, JR.**, Loveland, OH (US); **Daniel Lee Durstock**, Fort Wright, KY (US)

(21) Appl. No.: **13/470,820**

(22) Filed: **May 14, 2012**

Related U.S. Application Data

(60) Provisional application No. 61/644,618, filed on May 9, 2012.

Publication Classification

(51) **Int. Cl.**
F01D 5/18 (2006.01)

(52) **U.S. Cl.**
USPC ..... **416/97 R**

(57) **ABSTRACT**

A turbine airfoil includes pressure and suction sidewalls extending along a span from a base to a tip. Spanwise spaced apart trailing edge cooling holes disposed in pressure sidewall. All or a plurality of cooling holes end at a trailing edge cooling slot extending chordally substantially to an airfoil trailing edge. Each cooling hole includes a curved inlet, a metering section with a constant area and constant width flow cross section, and a spanwise diverging section leading into slot. Axial partitions extend chordally between and radially separate cooling holes along span. Aft ends of partitions include swept boat tails. Upper and lower deck sidewalls spanwise bound a deck of slot and extend outward to an external surface of pressure sidewall. Fillets between sidewalls and deck have fillet radii substantially the same size as bottom corner radii of flow cross section of diverging sections adjacent bottom corner radii.

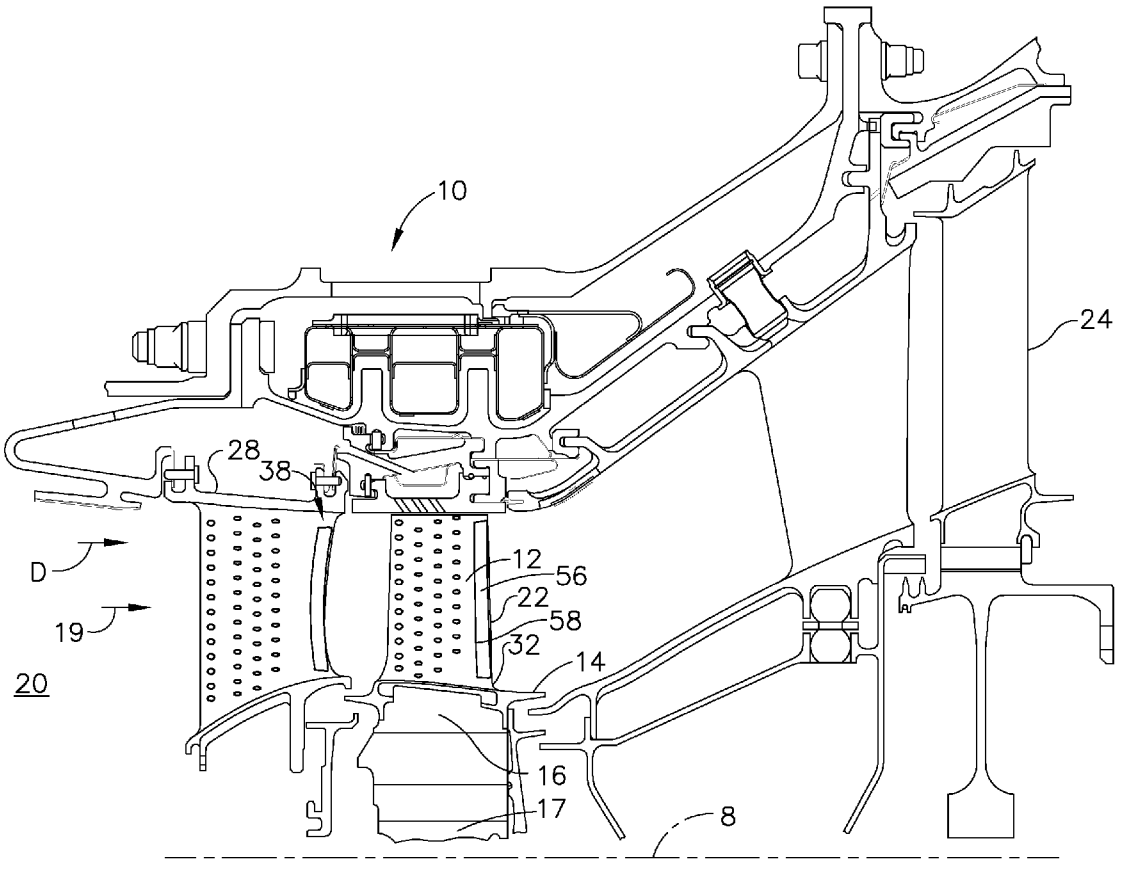

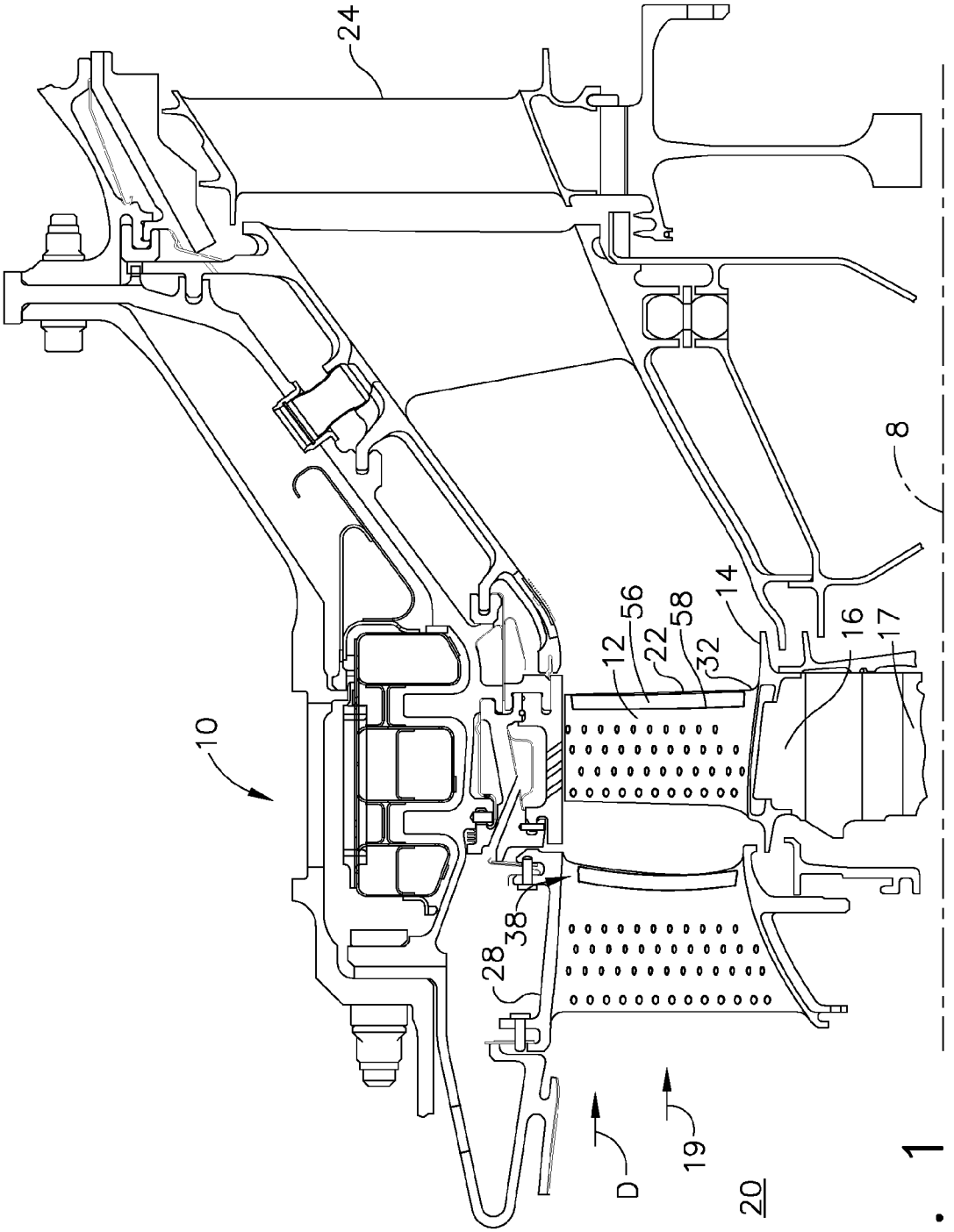

FIG. 1

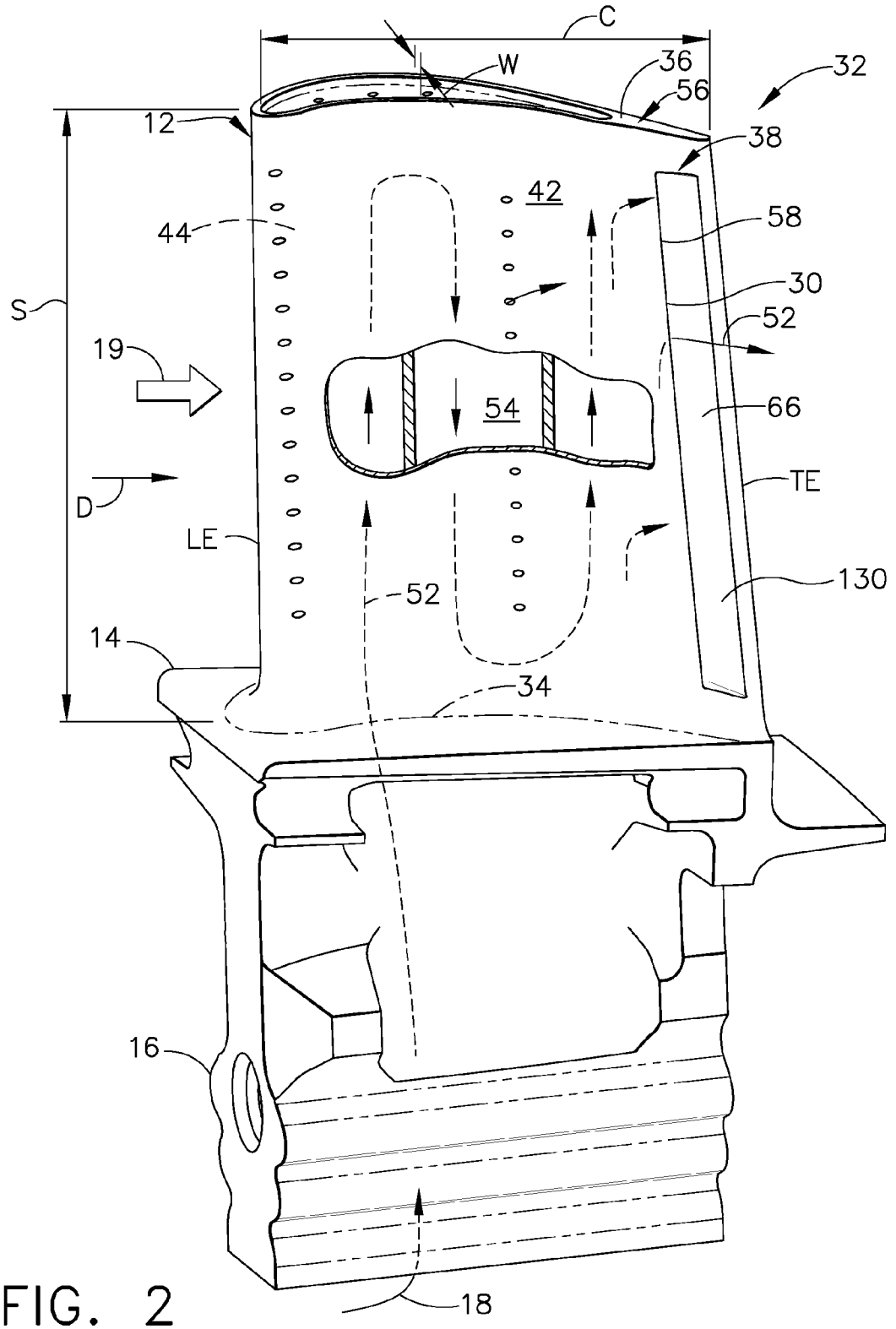

FIG. 2

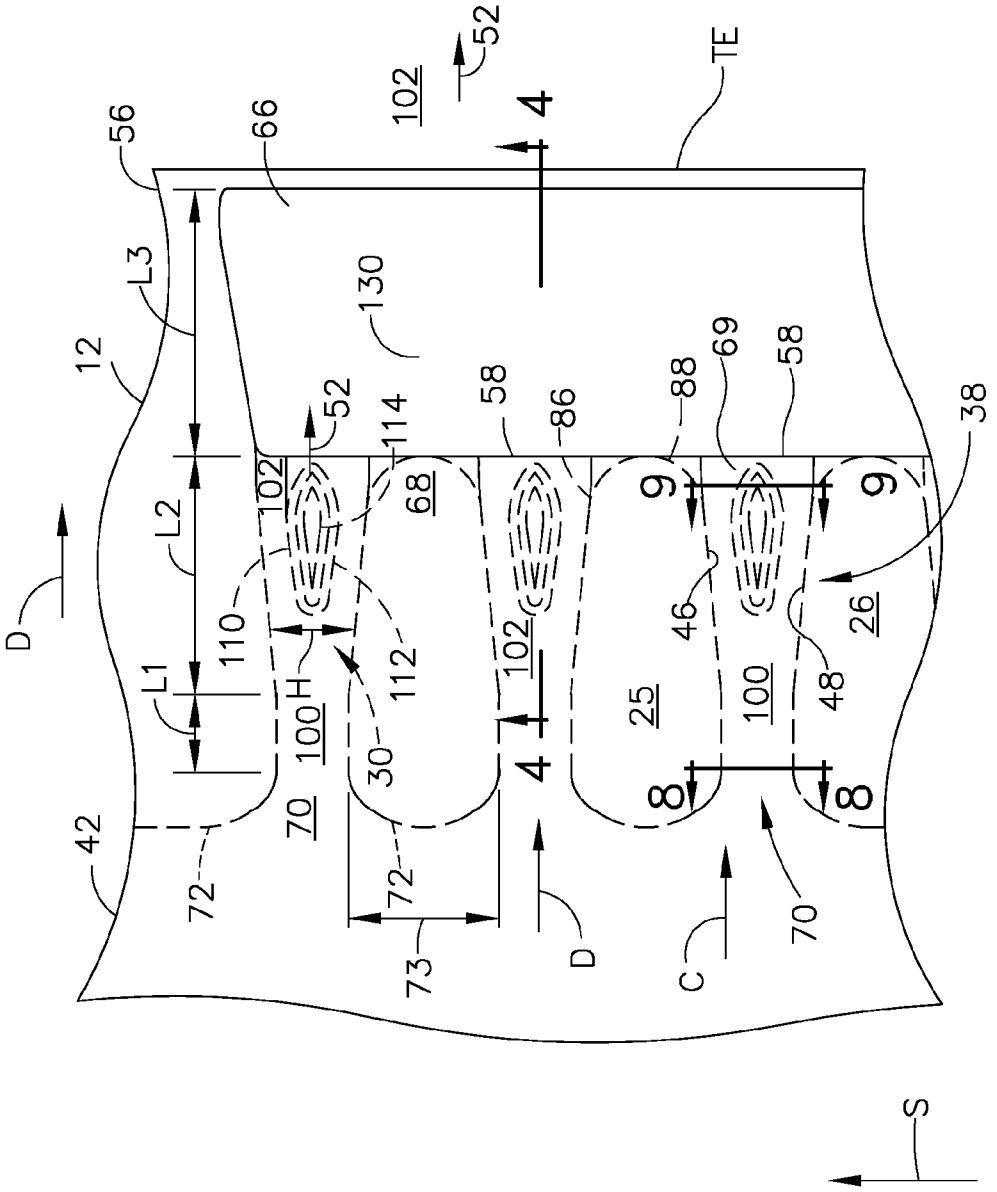

TE
52
102
4
56
66
L3
12
130
52
114
58
86
88
69
58
38
102
68
9
9
L2
D
110
112
102
46
26
L1
H
100
25
100
48
30
4
8
8
42
70
72
72
73
D
C
70
S

FIG. 3

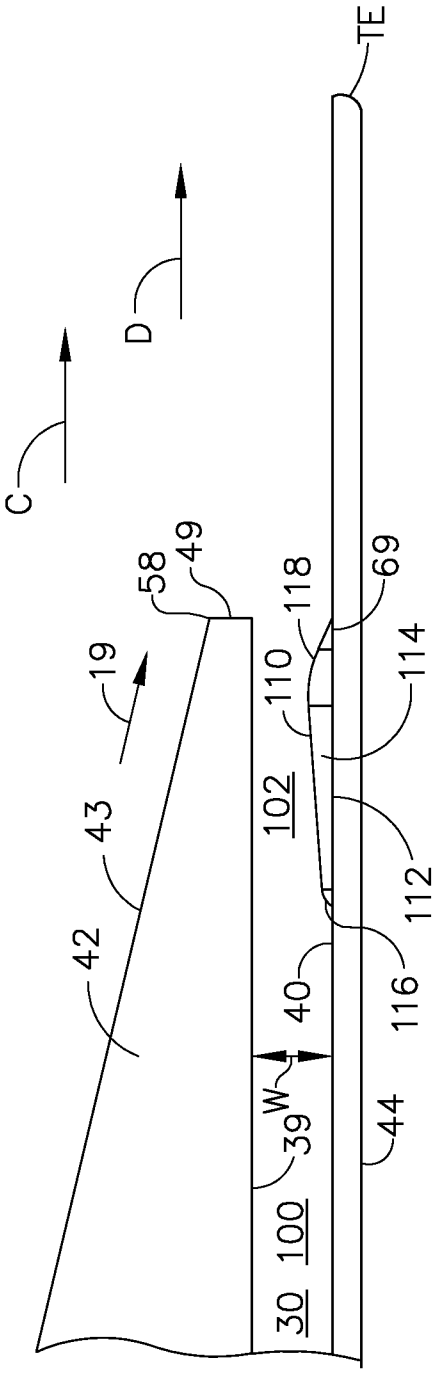

FIG. 4

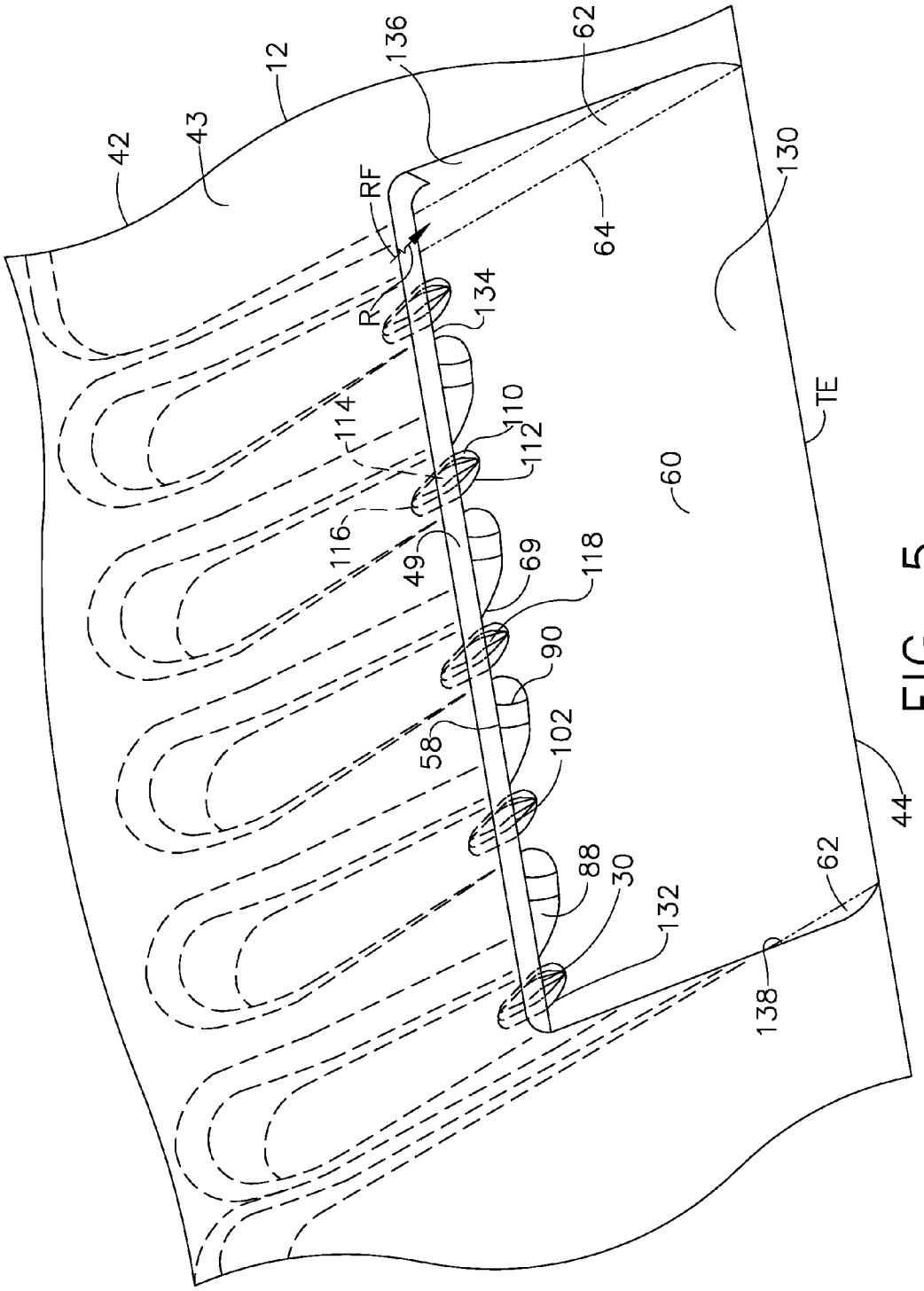
42
43
12
136
62
RF
64
130
R
134
114
110
112
TE
60
116
49
69
118
90
58
102
44
88
30
62
132
138

FIG. 5

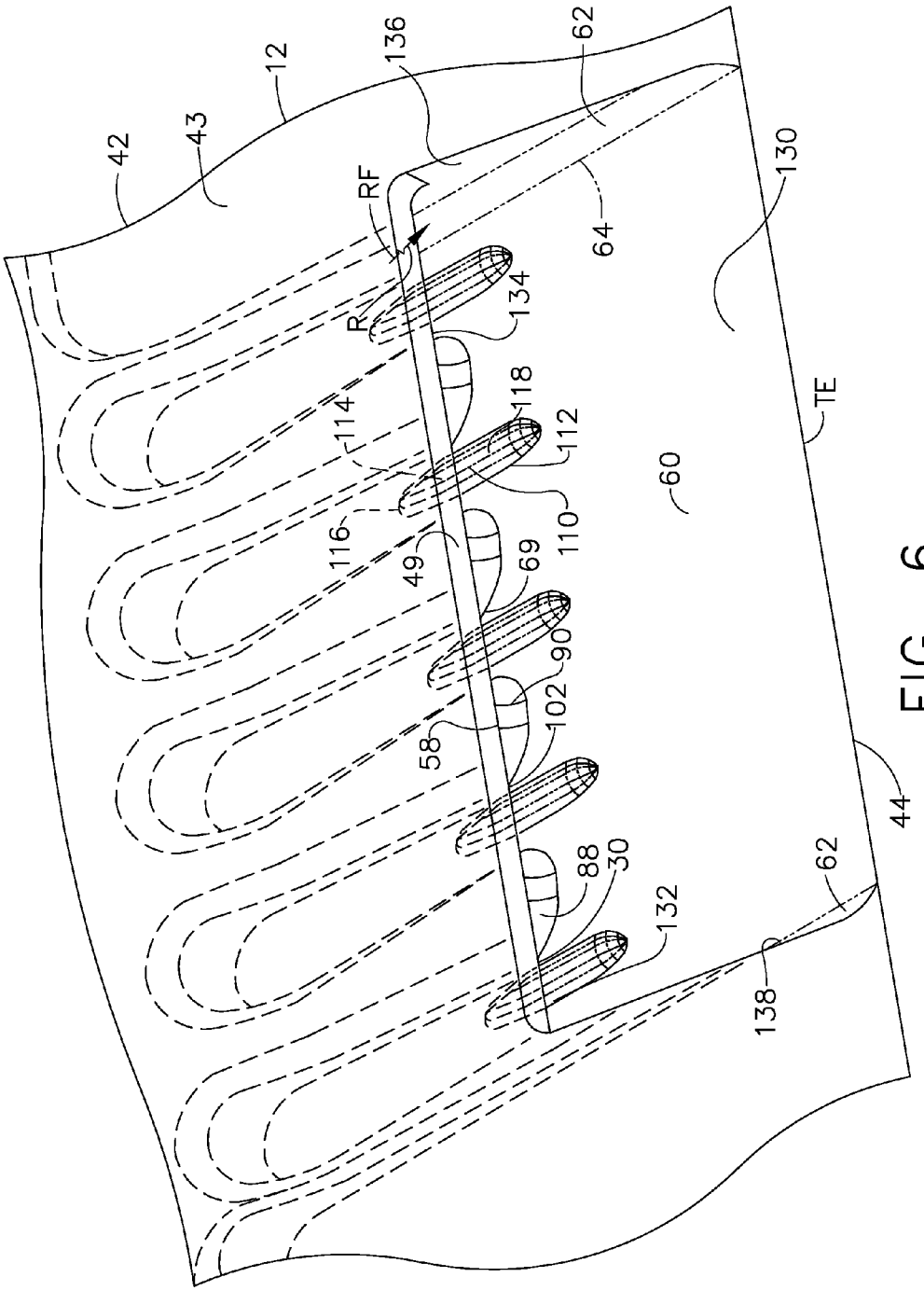
42
43
12
136
62
RF
R
64
130
134
118
114
112
TE
60
116
49
69
110
90
102
58
44
88
30
62
132
138

FIG. 6

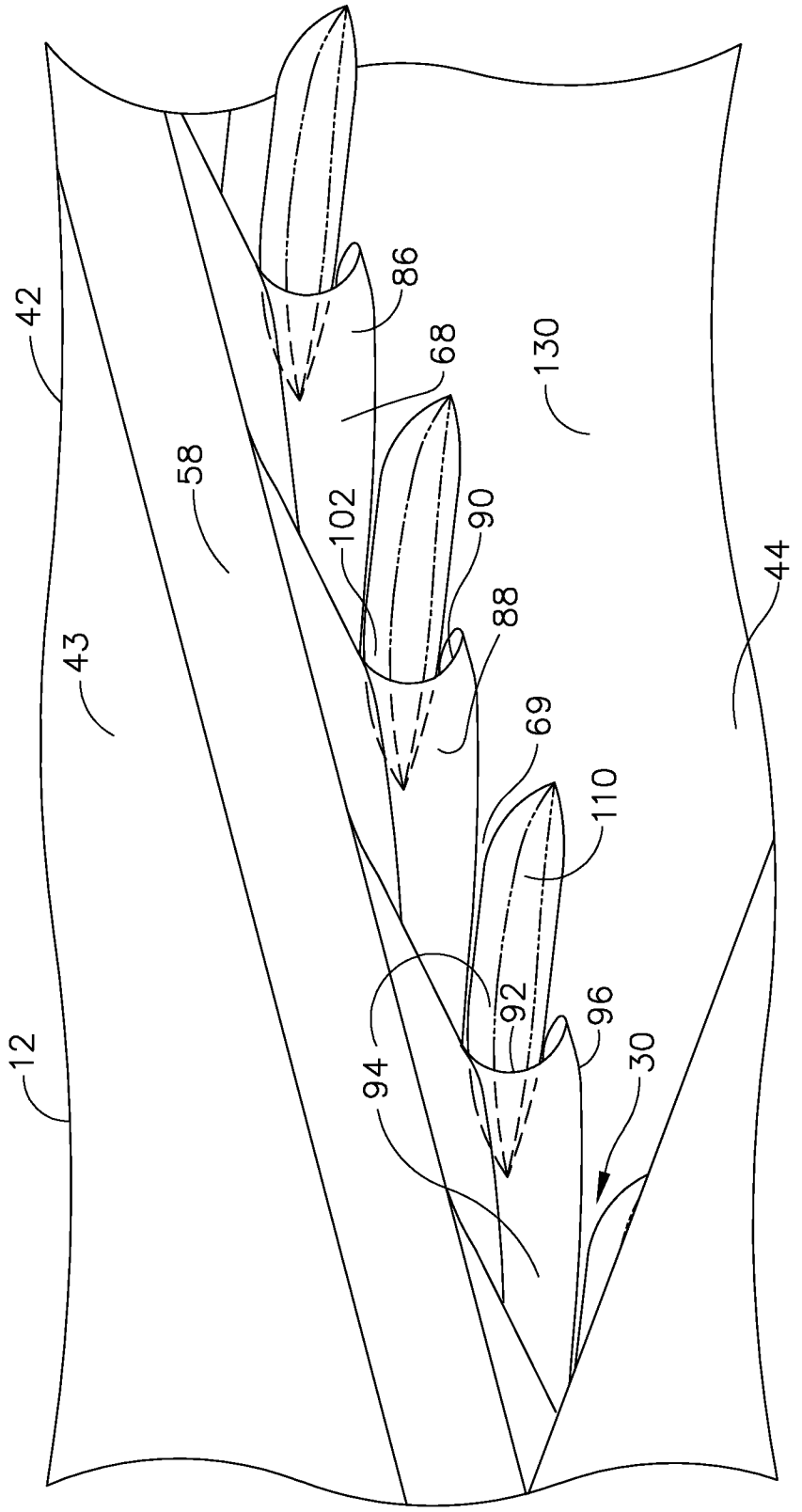

FIG. 7

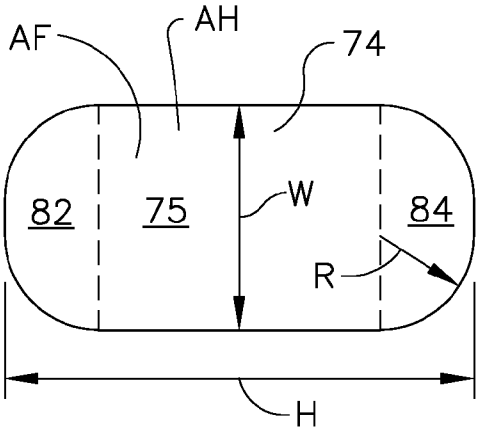

FIG. 8

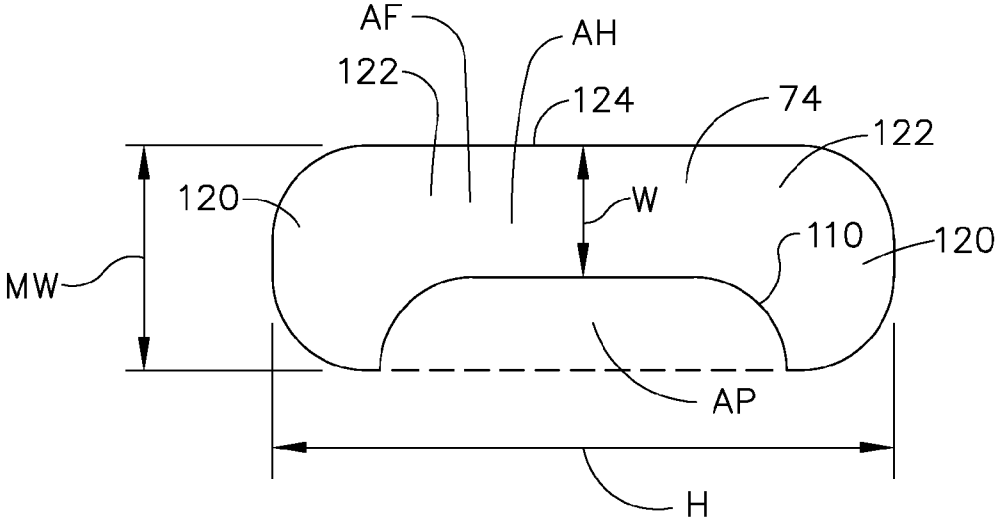

FIG. 9

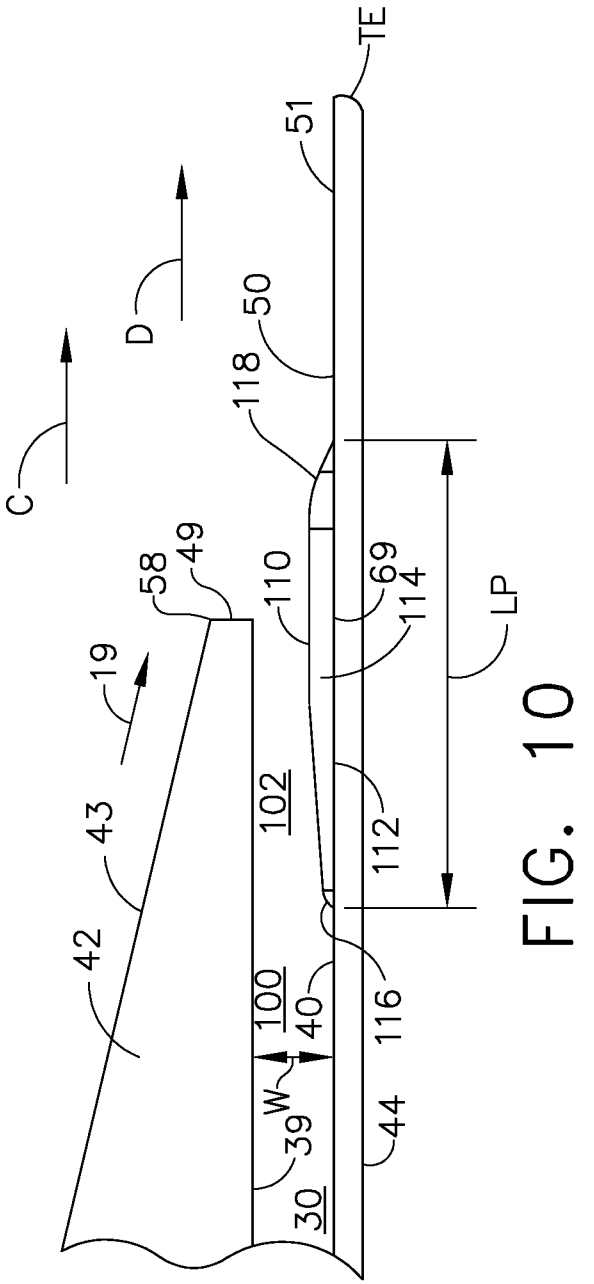
TE
51
D
50
C
118
58
49
110
69
114
LP
19
43
102
112
42
100
40
116
W
39
44
30

FIG. 10

TURBINE AIRFOIL TRAILING EDGE COOLING HOLE PLUG AND SLOT

CROSS-REFERENCE TO RELATED APPLICATIONS

[0001] The present application claims priority to U.S. Provisional Patent Application Ser. No. 61/644,618, entitled "TURBINE AIRFOIL TRAILING EDGE COOLING HOLE PLUG AND SLOT", filed May 9, 2012, the disclosure of which is hereby incorporated by reference.

BACKGROUND OF THE INVENTION

[0002] 1. Field of the Invention

[0003] The present invention relates generally to gas turbine engine turbine airfoil cooling and, more specifically, to turbine airfoil trailing edge cooling holes leading to trailing edge cooling slot.

[0004] 2. Description of Related Art

[0005] In a gas turbine engine, air is pressurized in a compressor and mixed with fuel in a combustor for generating hot combustion gases. The hot gases are channeled through various stages of a turbine which extract energy therefrom for powering the compressor and producing work, such as powering an upstream fan in a typical aircraft turbofan engine application.

[0006] The turbine stages include stationary turbine nozzles having a row of hollow vanes which channel the combustion gases into a corresponding row of rotor blades extending radially outwardly from a supporting rotor disk. The vanes and blades have corresponding hollow airfoils with corresponding cooling circuits therein.

[0007] The cooling air is typically compressor discharge air which is diverted from the combustion process and, therefore, decreases overall efficiency of the engine. The amount of cooling air must be minimized for maximizing the efficiency of the engine, but sufficient cooling air must nevertheless be used for adequately cooling the turbine airfoils for maximizing their useful life during operation. Each airfoil includes a generally concave pressure sidewall and, an opposite, generally convex suction sidewall extending longitudinally or radially outwardly along a span from an airfoil base to an airfoil tip and axially in a chordwise direction between leading and trailing edges. For a turbine blade, the airfoil span extends from a root at the radially inner platform to a radially outer tip spaced from a surrounding turbine shroud. For a turbine vane, the airfoil extends from a root integral with a radially inner band to a radially outer tip integral with an outer band.

[0008] Each turbine airfoil also initially increases in thickness aft of the leading edge and then decreases in thickness to a relatively thin or sharp trailing edge where the pressure and suction sidewalls join together. The wider portion of the airfoil has sufficient internal space for accommodating various forms of internal cooling circuits and turbulators for enhancing heat transfer cooling inside the airfoil, whereas, the relatively thin trailing edge has correspondingly limited internal cooling space.

[0009] Each airfoil typically includes various rows of film cooling holes extending through the sidewalls thereof which discharge the spent cooling air from the internal circuits. The film cooling holes are typically extend in the aft direction toward the trailing edge and create a thin film of cooling air over the external surface of the airfoil that provides a thermally insulating air blanket for additional protection against the hot combustion gases which flow over the airfoil surfaces during operation.

[0010] The thin trailing edge is typically protected by a row of trailing edge cooling slots or a single elongated slot which breach the pressure sidewall at a breakout immediately upstream of the trailing edge for discharging film cooling air thereover from the cooling holes. The single trailing edge cooling slot has an outlet aperture in the pressure side which begins at a breakout at aft ends of axially extending partitions which define the cooling holes.

[0011] The axial partitions may be integrally formed with the pressure and suction sides of the airfoil and themselves must be cooled by the air discharged through the cooling holes defined thereby. The partitions typically converge in the aft direction toward the trailing edge so that the cooling holes diverge toward the trailing edge with a shallow divergence angle that promotes diffusion of the discharged cooling air with little, if any, flow separation along the sides of the partitions.

[0012] Aerodynamic and cooling performance of the trailing edge cooling slot is directly related to the specific configuration of the cooling slots and the intervening partitions. The flow area of the cooling holes and slot regulates the flow of cooling air discharged through the cooling slot and the geometry of the cooling slots affects cooling performance thereof.

[0013] Accordingly, it is desired to provide a turbine airfoil having improved trailing edge cooling and cooling holes and cooling slot for improving airfoil durability and engine performance. It is also desired to minimize the amount of cooling flow used for trailing edge cooling in order to maximize fuel efficiency of the turbine and the engine.

SUMMARY OF THE INVENTION

[0014] A gas turbine engine turbine airfoil includes widthwise spaced apart pressure and suction sidewalls extending outwardly along a span from an airfoil base to an airfoil tip and extending in a chordwise direction between opposite leading and trailing edges. A spanwise row of spanwise spaced apart trailing edge cooling holes encased in the airfoil between the pressure and suction sidewalls. At least a plurality of the trailing edge cooling holes end at a single spanwise extending trailing edge cooling slot extending chordally substantially to the trailing edge. Each of the cooling holes includes in downstream serial cooling flow relationship, a curved inlet, a metering section with a constant area and constant width flow cross section, and a spanwise diverging section leading into the trailing edge cooling slot. Axial partitions extend chordally between and radially separate the cooling holes along the span. Aft ends of the partitions include swept boat tails.

[0015] The boat tails may be swept with each of the boat tails including a boat tail trailing edge having an apex spanwise located between the pressure and suction sidewalls. The boat tail trailing edge sweeps aftwardly or downstream from the apex. The boat tail trailing edge sweeps from the apex spanwise or radially outwardly to the pressure sidewall and inwardly to the suction sidewall from the apex. The swept boat tails may further include rounded cross sections through the aft ends of the partitions between spanwise pairs of adjacent cooling holes.

[0016] The pressure and suction sidewalls may include pressure and suction sidewall surfaces respectively in the hole

and the pressure sidewall surface may be planar through the entire metering and diverging sections. The width may be constant through the metering and diverging sections of the hole.

[0017] The airfoil may include a deck in the slot extending chordwise or downstream from the diverging sections of the cooling holes substantially to the airfoil trailing edge and extending spanwise or radially outwardly from a bottommost one to a topmost one of the trailing edge cooling holes. Upper and lower deck sidewalls spanwise bound the deck and extend from the deck to an external surface of the pressure sidewall. Fillets in slot corners between the upper and lower deck sidewalls and the deck have fillet radii substantially the same size as bottom corner radii of the flow cross section of the diverging sections adjacent the bottom corner radii.

BRIEF DESCRIPTION OF THE DRAWINGS

[0018] The foregoing aspects and other features of the invention are explained in the following description, taken in connection with the accompanying drawings where:

[0019] FIG. **1** is a longitudinal, sectional view illustration of an exemplary embodiment of turbine vane and rotor blade airfoils having cooling holes culminating at a spanwise extending trailing edge cooling slot.

[0020] FIG. **2** is a partially cutaway perspective view illustration of a blade illustrated in FIG. **1**.

[0021] FIG. **3** is a pressure side sectional view of cooling holes with plugs in cooling holes with metering and diffusing sections leading into the trailing edge cooling slot illustrated in FIG. **2**.

[0022] FIG. **4** is a cross sectional schematical view illustration of one of the cooling holes with the plug in the diffusing section leading into the trailing edge cooling slot taken through **4-4** in FIG. **3**.

[0023] FIG. **5** is an upstream looking perspective view illustration of the cooling holes, the plugs, and the trailing edge cooling slot illustrated in FIG. **3**.

[0024] FIG. **6** is a perspective view of the cooling holes and alternative plugs extending into the trailing edge cooling slots illustrated in FIG. **3**.

[0025] FIG. **7** is an enlarged perspective view illustration of boat tail aft ends of axial partitions between the cooling holes illustrated in FIG. **6**.

[0026] FIG. **8** is a cross sectional schematical view illustration of a flow cross section in the metering section taken through **8-8** in FIG. **3**.

[0027] FIG. **9** is a cross sectional schematical view illustration of a flow cross section in the diverging section taken through **9-9** in FIG. **3**.

[0028] FIG. **10** is a cross sectional schematical view illustration of one of the cooling holes with the alternative plug illustrated in FIG. **6**.

DETAILED DESCRIPTION OF THE INVENTION

[0029] Illustrated in FIG. **1** is an exemplary gas turbine engine high pressure turbine stage **10** circumscribed about an engine centerline axis **8** and positioned between a combustor **20** and a low pressure turbine (LPT) **24**. The combustor **20** mixes fuel with pressurized air for generating hot combustion gases **19** which flows downstream D through the turbines.

[0030] The high pressure turbine stage **10** includes a turbine nozzle **28** upstream of a high pressure turbine (HPT) **22** through which the hot combustion gases **19** are discharged into from the combustor **20**. The exemplary embodiment of the high pressure turbine **22** illustrated herein includes at least one row of circumferentially spaced apart high pressure turbine blades **32**. Each of the turbine blades **32** includes a turbine airfoil **12** integrally formed with a platform **14** and an axial entry dovetail **16** used to mount the turbine blade on a perimeter of a supporting rotor disk **17**.

[0031] Referring to FIG. **2**, the airfoil **12** extends radially outwardly along a span S from an airfoil base **34** on the blade platform **14** to an airfoil tip **36**. During operation, the hot combustion gases **19** are generated in the engine and flow downstream D over the turbine airfoil **12** which extracts energy therefrom for rotating the disk supporting the blade for powering the compressor (not shown). A portion of pressurized air **18** is suitably cooled and directed to the blade for cooling thereof during operation.

[0032] The airfoil **12** includes widthwise spaced apart generally concave pressure and convex suction sidewalls **42**, **44**. The pressure and suction sidewalls **42**, **44** extend longitudinally or radially outwardly along the span S from the airfoil base **34** to the airfoil tip **36**. The sidewalls also extend axially in a chordwise direction C between opposite airfoil leading and trailing edges LE, TE. The airfoil **12** is hollow with the pressure and suction sidewalls **42**, **44** being spaced widthwise or laterally apart between the airfoil leading and trailing edges LE, TE to define an internal cooling cavity or circuit **54** therein for circulating pressurized cooling air or coolant flow **52** during operation. The pressurized cooling air or coolant flow **52** is from the portion of pressurized air **18** diverted from the compressor.

[0033] The turbine airfoil **12** increases in width W or widthwise from the airfoil leading edge LE to a maximum width aft therefrom and then converges to a relatively thin or sharp airfoil trailing edge TE. The size of the internal cooling circuit **54** therefore varies with the width W of the airfoil, and is relatively thin immediately forward of the trailing edge TE where the two sidewalls integrally join together and form a thin trailing edge portion **56** of the airfoil **12**. A spanwise extending trailing edge cooling slot **66** is provided at or near this thin trailing edge portion **56** of the airfoil **12** to cool it.

[0034] Illustrated in FIGS. **3-7**, is a spanwise row **38** of spanwise spaced apart trailing edge cooling holes **30** encased or buried and formed in the airfoil **12** between the pressure and suction sidewalls **42**, **44**. All or a plurality of the cooling holes **30** terminate or end at the trailing edge cooling slot **66** to supply coolant cooling air or coolant flow **52** to the slot **66**. The trailing edge cooling slot **66** extends chordally substantially to the trailing edge TE. The trailing edge cooling holes **30** are disposed along the span S of the trailing edge TE in flow communication with the internal cooling circuit **54** for discharging the coolant flow **52** therefrom during operation. A floor or deck **130** of the slot **66** extends chordwise or downstream from the diverging sections **102** of the cooling holes **30** substantially to the airfoil trailing edge TE. The deck **130** extends spanwise or radially outwardly from a bottommost one **132** to a topmost one **134** of the trailing edge cooling holes **30**. The deck **130** is spanwise bound by upper and lower deck sidewalls **136**, **138** which extend from the deck **130** to an external surface **43** of the pressure sidewall **42**. A slot surface **60** extends widthwise between the upper and lower deck sidewalls **136**, **138** along the deck **130**. Fillets **62** in slot corners **64** between the upper and lower deck sidewalls **136**, **138** and the deck **130** have fillet radii RF that may be substantially the same size as bottom corner radii R of the flow cross

section **74** of the diverging sections **102** adjacent the bottom corner radii R (illustrated in FIG. **9**). The fillet radii RF helps with castability of the trailing edge cooling slot **66**.

[0035] The trailing edge cooling holes **30** are illustrated in more particularity in FIG. **3**. Each cooling hole **30** includes, in downstream serial cooling flow relationship, a downstream converging or bellmouth shaped curved inlet **70**, a constant area and constant width flow cross section metering section **100**, and a spanwise diverging section **102** which leads into the trailing edge cooling slot **66** and supplies the slot with cooling air or coolant flow **52**. Referring to FIGS. **3-6**, the trailing edge cooling slot **66** begins at a breakout **58** located at downstream ends **69** of the diverging sections **102**. The diverging sections **102** of the cooling holes **30** lead into the trailing edge cooling slot **66** which breaches the external surface **43** of the pressure sidewall **42** at a breakout lip **49** spaced forward or upstream from the trailing edge TE.

[0036] The cooling holes **30** are separated radially along the span S from each other by corresponding axial partitions **68** which extend downstream toward the trailing edge TE. The curved inlet **70** is illustrated herein as downstream converging or, more particularly, a bellmouth inlet. The inlet **70** is defined at and between forward ends **72** of the partitions **68**. The partitions **68** include semi-circular forward ends **72** having diameters **73** that define the bellmouth inlet **70**. Each of the cooling holes **30** includes spanwise spaced apart upper and lower hole surfaces **46**, **48** along a corresponding adjacent pair of upper and lower ones **25**, **26** of the axial partitions **68**. A spanwise height H of the hole **30** is defined between the upper and lower hole surfaces **46**, **48** of the upper and lower ones **25**, **26** of the axial partitions **68** as illustrated in FIG. **3**. The metering section **100**, the diverging section **102**, and the trailing edge cooling slot **66** have downstream extending first, second, and third lengths L**1**, L**2**, and L**3** respectively as illustrated in FIG. **3**.

[0037] Referring to FIGS. **3** and **5-7**, aft ends **86** of the partitions **68** have aerodynamically-shaped swept boat tails **88** design and shaped to reduce aerodynamic losses due to flow separation wakes at the aft ends **86**. The swept boat tails **88** are also designed to facilitate flow spreading past the slot breakout **58** at the downstream end **69** of the diverging section **102**. Each of the swept boat tails **88** include a boat tail trailing edge **90** extending spanwise between the pressure and suction sidewalls **42**, **44** and having an apex **92** spanwise located between the breakout lip **49** or the pressure sidewall **42** and the suction sidewall **44** as illustrated in FIG. **6**. The boat tail trailing edge **90** sweeps aftwardly or downstream from the apex **92**. The boat tail trailing edge **90** sweeps from the apex **92** spanwise or radially outwardly to the breakout lip **49** or the pressure sidewall **42** and inwardly to the suction sidewall **44** from the apex **92**. Each of the swept boat tails **88** includes rounded cross sections **96** through the aft ends **86** of the partitions **68** between spanwise pairs **94** of adjacent cooling holes **30**. The boat tail trailing edges **90** provide additional strength at the breakout lip **49** and merges the flows of the different cooling holes **30** at the floor or deck **130** upstream of the breakout **58** which is an exit of the cooling holes **30**.

[0038] Referring to FIGS. **3-5**, aerodynamically shaped plugs **110** are disposed in the cooling holes **30**. The plugs **110** extend downstream through at least a portion of the diverging section **102**. The plugs **110** include a plug dome **114** rising up from a plug base **112**. The plug dome **114** includes widthwise and spanwise rounded upstream and downstream dome ends **116**, **118**. The spanwise height H of the plug base is less than the spanwise height H of the cooling hole along a plug length LP of the plug **110**. The plug **110** is spanwise centered in the hole **30**. The plug bases **112** are illustrated herein as extending along the suction sidewall surfaces **40** of the suction sidewalls **44**. Alternatively, the plug bases **112** may extend along the pressure sidewall surfaces **39** of the pressure sidewalls **42**. The plug **110** provides control of the rate of expansion of the area flow cross section **74** in the diverging section **102** of the cooling hole **30**. The plug **110** helps maintain stable diffuser flow along the cooling hole surfaces i.e prevents or reduces flow separation and turbulence along the pressure and suction sidewall surfaces **39**, **40** of the pressure and suction sidewalls **42**, **44** respectively in the diverging section **102**. The plug **110** allows the divergence of the upper and lower hole surfaces **46**, **48** of the upper and lower ones **25**, **26** of the axial partitions **68** in the diverging section **102** to be greater than without the plug, and still maintain attached and stable coolant flow **52** through the diverging section **102**. The flow cross section **74** increases in area through the entire second length L**2** of the diverging section **102** but the rate of this increase is controlled by the plug **110**. The plug **110** is three dimensionally shaped or contoured to maintain attached and stable coolant flow **52** and prevent separation along the upper and lower hole surfaces **46**, **48** of the upper and lower ones **25**, **26** of the axial partitions **68** through the diverging section **102**.

[0039] Referring to FIG. **12**, the cooling hole **30** has a cross sectional hole area AH and the plug **110** has a cross sectional plug area AP. The flow cross section **74** between the plug **110** and the cooling hole **30** has a cross sectional flow area AF equal to the difference between the hole area AH and the plug area AP. The cross sectional flow area AF of the flow cross section **74** in the diverging section **102** increases in the downstream direction. The cross sectional flow area AF of the flow cross section **74** in the metering section **100** and in any portion of the diverging section **102** upstream of the plug **110** is the cross sectional hole area AH of the cooling hole **30**.

[0040] The embodiment of the flow cross section **74** in the metering section **100** and in any portion of the diverging section **102** upstream of the plug **110** is illustrated in FIGS. **8** and **11** as having a race track shaped flow cross section **74** with the rectangular section **75** between spanwise or radially spaced apart rounded or semi-circular inner and outer end sections **82**, **84**. The race track shaped flow cross section **74** illustrated herein is spanwise elongated, has four equal corner radii R, and has a preferred width to height ratio W/H in a range of 0.15-0.50.

[0041] The embodiment of the flow cross section **74** in a portion of the diverging section **102** having the plug **110** illustrated in FIG. **12** may generally be described as having two relatively wide rounded lobes **120** at distal ends **122** of a relatively narrow rectangular middle section **124**. The height H of the flow cross section **74** increases through the entire length of the diverging section **102**. The width W of the flow cross section **74** is constant where there is no plug **110** and varies across the height H of the flow cross section **74** where there is a plug **110** as illustrated in FIG. **4**. The lobes **120** have a maximum width MW equal to the width W of the diverging section **102** as measured between the pressure and suction sidewall surfaces **39**, **40** of the pressure and suction sidewalls **42**, **44** respectively.

[0042] The lobes **120** extend between the pressure and suction sidewall surfaces **39**, **40** of the pressure and suction sidewalls **42**, **44** respectively in the diverging section **102**. The lobes **120** are substantially wider than the middle section **124**.

The lower hole surface **48** of the lower ones **26** of the axial partitions **68** is substantially wider than the plug base **112** along the diverging section **102** where the plug **110** is located. This provides for the coolant flow **52** to pass between and cool the plug **110** and the pressure and suction sidewall surfaces **39**, **40** of the pressure and suction sidewalls **42**, **44** respectively in the diverging section **102**.

[0043] The cooling holes **30**, the trailing edge cooling slot **66**, and the swept boat tails **88** are designed to provide a spanwise deck **130** film effectiveness over the entire slot deck **130** all the way downstream or aft to the terminus of the deck **130** the airfoil trailing edge TE, even at significantly reduced cooling flow. Airfoil cooling design studies have shown a potential cooling flow reduction of about 10 percent of stage 1 blade flow. The study also indicated at the same time, trailing edge temperatures are still 80 to 90 degrees F. lower that more conventional slot designs, so further flow reductions are possible. This is a significant benefit to engine performance.

[0044] Referring to FIGS. **3-5**, a hole width W of the hole **30** is defined between pressure and suction sidewall surfaces **39**, **40** of the pressure and suction sidewalls **42**, **44** respectively as illustrated in FIG. **4**. The trailing edge cooling slot **66** and the deck **130** are open and exposed to the hot combustion gases **19** that pass through the high pressure turbine **22**. The deck **130** extends for the entire third length L**3** along the suction sidewall **44**.

[0045] The cooling holes **30** and trailing edge cooling slot **66** are cast in cooling features. Casting these features provides good strength, low manufacturing costs, and durability for the airfoil and blades and vanes. The race track shaped flow cross section **74** with the rectangular section **75** between spanwise or radially spaced apart rounded or semi-circular inner and outer end sections **82**, **84** provides good cooling flow characteristics which reduces the amount of the coolant flow **52** needed to cool the airfoils. The bottom corner radii R contribute to good cooling, castability, and strength of these cooling features.

[0046] The spanwise elongated metering section **100** with the constant width W is sized to control the quantity of coolant flow **52** to benefit the engine cycle. The spanwise elongated metering section **100** and diverging section **102** expand the flow coverage at the breakout **58**, evenly distributes coolant flow **52** in the trailing edge cooling slot **66**. The constant width W metering section **100** upstream of the diverging section **102** of the hole **30** helps keep the coolant flow **52** fully attached in the diverging section **102**. The constant width W metering section **100** with the racetrack shaped area and flow cross section **74** reduces trailing edge cooling flow **52**.

[0047] The planar pressure sidewall surface **39** of the cooling hole **30** helps keep a coolant velocity of the coolant flow **52** and a gas velocity of the hot combustion gases along the external surface **43** of the pressure sidewall **42** at the breakout about equal to minimize aero losses which could result in a negative effect on turbine efficiency. These two features also help keep the coolant flow **52** flow attached in the slot **66**.

[0048] Referring to FIGS. **6**, **7**, and **10**, the aerodynamically shaped plugs **110** disposed in the cooling holes **30** are extended plugs which extend further downstream through at least a portion of the diverging sections **102** and at least a portion of the trailing edge cooling slots **66**.

[0049] The plug creates an aerodynamic flow blockage in the diffusing section, i.e., reduced flow area for a given coolant flow rate. This allows the diffuser expansion angle to be increased, and still maintain stable, attached flow in the diffuser. The higher diffuser expansion results in a smaller hot land surface area and larger cold slot floor surface area. The plug also keeps the coolant velocity up at the slot exit. For the same coolant flow rate, a diffuser without a plug has a lower slot exit velocity than one with a plug. This is important for limiting the aerodynamic losses due to mixing of the hot gas and coolant streams, which is a function of the ration of coolant velocity to external gas velocity. The closer this ratio is to 1, the lower the mixing loss. The plug aids in keeping cooling flow velocity high, while still reducing the cooling flow. The plug sets up a very favorable flow angle and vortex condition for pushing coolant flow onto the deck giving much higher land film effectiveness. The extended plug accentuates this effect.

[0050] The plug **110** is designed to improve the diffuser performance of the diverging sections **102** of the cooling holes **30**. The plug helps stabilize internal flow in the diverging sections. The plug have many aerodynamic shapes including lobed shapes with side trenches below the mean level of the slot floor, depending on design needs and the intended flow area variation, to maintain internal flow attachment. The diffusing diverging section maintains stable flow expansion at a specific combination of wall diffusion angle, diffusion length, and shape of the internal part of the plug.

[0051] The diverging sections **102** of the cooling holes **30** set up a spreading exit flow angle at cooling hole exit to the slot **66**. The deck **130** eliminates conventional lands, which tend to be the hottest parts of the trailing edge. Hence, the cold slot floor area is maximized. The swept boat tails **88** are designed to reduced aerodynamic losses and facilitate flow spreading past the breakout **58**.

[0052] The present invention has been described in an illustrative manner. It is to be understood that the terminology which has been used is intended to be in the nature of words of description rather than of limitation. While there have been described herein, what are considered to be preferred and exemplary embodiments of the present invention, other modifications of the invention shall be apparent to those skilled in the art from the teachings herein and, it is, therefore, desired to be secured in the appended claims all such modifications as fall within the true spirit and scope of the invention.

Accordingly, what is desired to be secured by Letters Patent of the United States is the invention as defined and differentiated in the following claims:

1. A gas turbine engine turbine airfoil comprising:

widthwise spaced apart pressure and suction sidewalls extending outwardly along a span from an airfoil base to an airfoil tip;

the pressure and suction sidewalls extending chordwise between opposite leading and trailing edges;

a spanwise row of spanwise spaced apart trailing edge cooling holes encased in the pressure sidewall;

all or a plurality of the cooling holes ending at a single spanwise extending trailing edge cooling slot extending chordally substantially to the trailing edge;

each of the cooling holes including in downstream serial cooling flow relationship, a curved inlet, a metering section with a constant area and constant width flow cross section, and a spanwise diverging section leading into the trailing edge cooling slot;

axial partitions extending chordally between and radially separating the cooling holes along the span; and

aft ends of the partitions including swept boat tails.

2. The airfoil as claimed in claim 1 further comprising a spanwise heights substantially greater than hole widths through the cooling holes.

3. The airfoil as claimed in claim 1 further comprising pressure and suction sidewall surfaces of the pressure and suction sidewalls respectively in the hole and the pressure sidewall surface being planar through the entire metering and diverging sections.

4. The airfoil as claimed in claim 3 further comprising the width being constant through the metering and diverging sections of the hole.

5. The airfoil as claimed in claim 1 further comprising:

a deck in the slot extending chordwise or downstream from the diverging sections of the cooling holes substantially to the airfoil trailing edge,

the deck extending spanwise or radially outwardly from a bottommost one to a topmost one of the trailing edge cooling holes,

upper and lower deck sidewalls spanwise bounding the deck and extending from the deck to an external surface of the pressure sidewall, and

fillets in slot corners between the upper and lower deck sidewalls and the deck.

6. The airfoil as claimed in claim 5 further comprising the fillets having fillet radii substantially the same size as bottom corner radii of the flow cross section of the diverging sections adjacent the bottom corner radii.

7. The airfoil as claimed in claim 4 further comprising:

the diverging section having a race track shaped flow cross section,

the race track shaped flow cross section including a rectangular section between spanwise spaced apart rounded or semi-circular inner and outer end sections having radii,

a deck in the slot extending chordwise or downstream from the diverging sections of the cooling holes substantially to the airfoil trailing edge,

the deck extending spanwise or radially outwardly from a bottommost one to a topmost one of the trailing edge cooling holes, upper and lower deck sidewalls spanwise bounding the deck and extending from the deck to an external surface of the pressure sidewall,

fillets in slot corners between the upper and lower deck sidewalls and the deck, and

the fillets having fillet radii substantially the same size as the radii of the flow cross section.

8. The airfoil as claimed in claim 1 further comprising:

the boat tails being swept,

each of the boat tails including a boat tail trailing edge having an apex spanwise located between the pressure and suction sidewalls,

the boat tail trailing edge sweeping aftwardly or downstream from the apex, and

the boat tail trailing edge sweeping from the apex spanwise or radially outwardly to the pressure sidewall and inwardly to the suction sidewall from the apex.

9. The airfoil as claimed in claim 8 further comprising the swept boat tails including rounded cross sections through the aft ends of the partitions between spanwise pairs of adjacent cooling holes.

10. The airfoil as claimed in claim 9 further comprising the metering and diverging sections having a hole height to hole width ratio of the spanwise height and the hole width in a range of about 2:1 to 10:1.

11. The airfoil as claimed in claim 9 further comprising pressure and suction sidewall surfaces of the pressure and suction sidewalls respectively in the hole and the pressure sidewall surface being planar through the entire metering and diverging sections.

12. The airfoil as claimed in claim 11 further comprising the width being constant through the metering and diverging sections of the hole.

13. The airfoil as claimed in claim 12 further comprising the inlet being downstream converging or bellmouth shaped.

14. A gas turbine engine turbine airfoil comprising:

widthwise spaced apart pressure and suction sidewalls extending outwardly along a span from an airfoil base to an airfoil tip;

the pressure and suction sidewalls extending chordwise between opposite leading and trailing edges;

a spanwise row of spanwise spaced apart trailing edge cooling holes encased in the pressure sidewall and ending at a single spanwise extending trailing edge cooling slot extending chordally substantially to the trailing edge;

each of the cooling holes including in downstream serial cooling flow relationship, a curved inlet, a metering section, and a spanwise diverging section leading into the trailing edge cooling slot;

axial partitions extending chordally between and radially separating the cooling holes along the span; and

aft ends of the partitions including swept boat tails.

15. The airfoil as claimed in claim 14 further comprising:

the boat tails being swept,

each of the boat tails including a boat tail trailing edge having an apex spanwise located between the pressure and suction sidewalls,

the boat tail trailing edge sweeping aftwardly or downstream from the apex, and

the boat tail trailing edge sweeping from the apex spanwise or radially outwardly to the pressure sidewall and inwardly to the suction sidewall from the apex.

16. The airfoil as claimed in claim 15 further comprising the swept boat tails including rounded cross sections through the aft ends of the partitions between spanwise pairs of adjacent cooling holes.

17. The airfoil as claimed in claim 16 further comprising:

a deck in the slot extending chordwise or downstream from the diverging sections of the cooling holes substantially to the airfoil trailing edge,

the deck extending spanwise or radially outwardly from a bottommost one to a topmost one of the trailing edge cooling holes, upper and lower deck sidewalls spanwise bounding the deck and extending from the deck to an external surface of the pressure sidewall, and

fillets in slot corners between the upper and lower deck sidewalls and the deck.

18. The airfoil as claimed in claim 17 further comprising the fillets having fillet radii substantially the same size as bottom corner radii of the flow cross section of the diverging sections adjacent the bottom corner radii.

19. The airfoil as claimed in claim 16 further comprising:

the diverging section having a race track shaped flow cross section,

the race track shaped flow cross section including a rectangular section between spanwise spaced apart rounded or semi-circular inner and outer end sections having radii,

a deck in the slot extending chordwise or downstream from the diverging sections of the cooling holes substantially to the airfoil trailing edge,

the deck extending spanwise or radially outwardly from a bottommost one to a topmost one of the trailing edge cooling holes, upper and lower deck sidewalls spanwise bounding the deck and extending from the deck to an external surface of the pressure sidewall,

fillets in slot corners between the upper and lower deck sidewalls and the deck, and

the fillets having fillet radii substantially the same size as the radii of the flow cross section.

20. The airfoil as claimed in claim **19** further comprising the metering and diverging sections having a hole height to hole width ratio of the spanwise height and the hole width in a range of about 2:1 to 10:1.

* * * * *