(No Model.)

R. D. SHAFER.

FIGURE TOY.

No. 590,339. Patented Sept. 21, 1897.

Fig. 1.

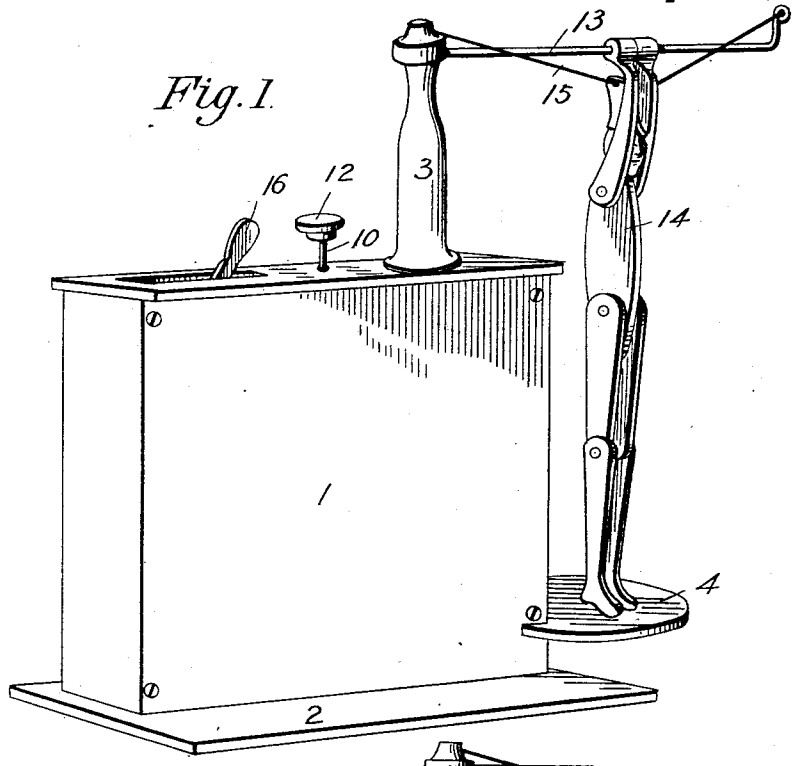

Fig. 2.

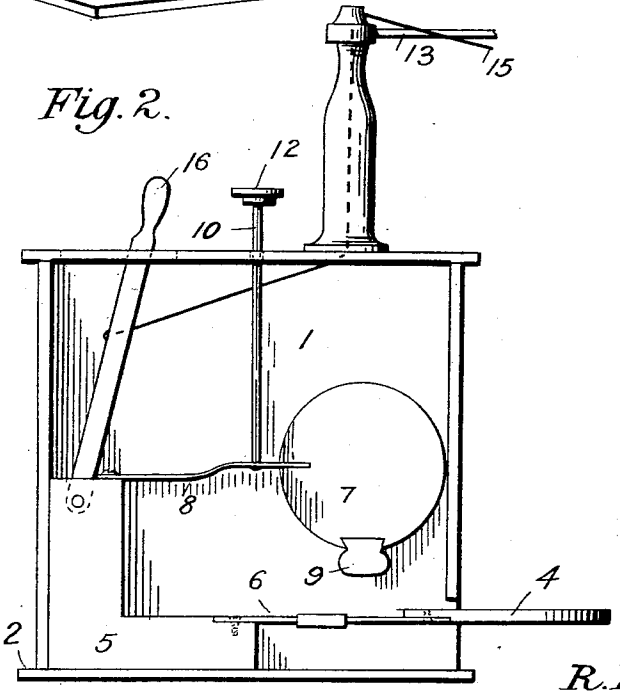

Witnesses:
J. S. Borrew
J. Allison

Inventor:
R. D. Shafer,
By A. B. Wilson
Attorney

THE NORRIS PETERS CO., PHOTO-LITHO., WASHINGTON, D. C.

UNITED STATES PATENT OFFICE.

ROBERT D. SHAFER, OF FAYETTE, OHIO.

FIGURE TOY.

SPECIFICATION forming part of Letters Patent No. 590,339, dated September 21, 1897.

Application filed May 28, 1897. Serial No. 638,581. (No model.)

To all whom it may concern:

Be it known that I, ROBERT D. SHAFER, a citizen of the United States, residing at Fayette, in the county of Fulton and State of Ohio, have invented certain new and useful Improvements in a Combined Dancing and Performing Toy; and I do declare the following to be a full, clear, and exact description of the invention, such as will enable others skilled in the art to which it appertains to make and use the same.

My invention has relation to toys; and the object of the invention is to provide a combined acrobatic and dancing toy which will prove amusing to both young and old.

With this object in view the invention consists in certain features of construction and combination of parts, which will be hereinafter fully set forth.

In the accompanying drawings, Figure 1 is a perspective view of my improved toy, and Fig. 2 is a side elevation with one of the sides of the frame removed.

In said drawings, 1 denotes a casing having a supporting-base 2, and provided at its top with a hollow standard 3.

4 denotes a platform which is secured to a block 5 within the casing by a flat spring 6.

7 denotes a weight which is connected to the block by a spring 8 above the spring 6 and is provided with a rubber knocker 9, adapted to engage the spring 6.

10 denotes a push-rod which is connected to the spring 8 and extends upwardly through a hole 11 in the top of the casing and is provided with a push-button 12.

13 denotes a horizontal bar secured to the post and projecting over the spring-platform, and pivoted to this bar is a jointed figure 14, the feet of which barely touch the platform when it is in a state of rest.

By reciprocating the weight back and forth against the spring 6 the platform will be given a quick vibratory motion, which will cause the jointed figure to dance, and the movements of this figure very much resemble those of a clog-dancer.

15 denotes a cord or wire which is secured to the outer upturned end of the horizontal bar, passes through holes in the arms of the jointed figure, thence downwardly through the post, and is connected to the pivoted lever 16, which when operated will cause the jointed figure to perform acrobatic feats.

A toy thus constructed is simple and comparatively inexpensive of production and will prove very amusing to both the young and old.

Although I have specifically described the construction and relative arrangement of the several elements of my invention, I do not desire to be confined to the same, as such changes or modifications may be made as clearly fall within the scope of my invention without departing from the spirit thereof.

Having thus described my invention, what I claim, and desire to secure by Letters Patent, is—

1. A combined dancing and performing toy, comprising the following essential elements, to wit: a casing provided with a hollow post having a horizontal bar, a jointed figure hung upon said horizontal bar, a lever pivoted in said casing, a cord or wire connected to the other end of said bar and to the pivoted figure and having its opposite end connected to the lever, a platform arranged below the jointed figure, a spring secured to said platform and to the casing, a knocker within said casing and connected thereto by a spring, and a push-rod connected with the flat spring and projecting upward through the top of the casing, substantially as described.

2. In a toy, the combination with a casing having a hollow post, a horizontal bar, a jointed figure hung upon said horizontal bar, a cord or wire connected to the outer upturned end of the horizontal bar and to the jointed figure, passed downwardly through the hollow post, and connected to a lever, substantially as set forth.

In testimony whereof I hereunto affix my signature in presence of two witnesses.

ROBERT D. SHAFER.

Witnesses:

D. A. BAKER,

M. DEMEBARGER.