R. W. NAZEL.

CORRUGATING MACHINE.

APPLICATION FILED DEC. 11, 1914.

1,161,510.

Patented Nov. 23, 1915.

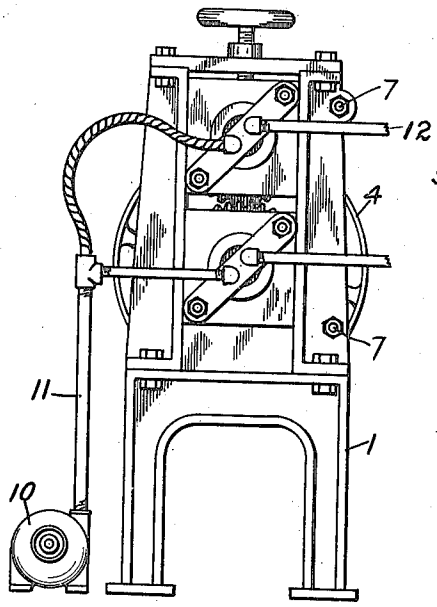

Fig. 1

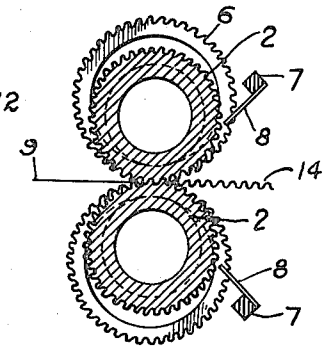

Fig. 3

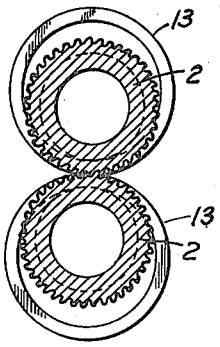

Fig. 6

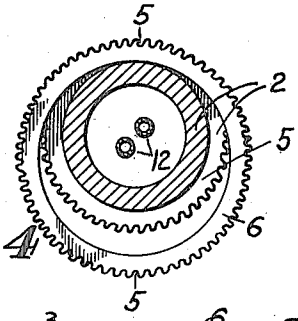

Fig. 4

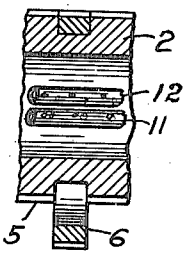

Fig. 5

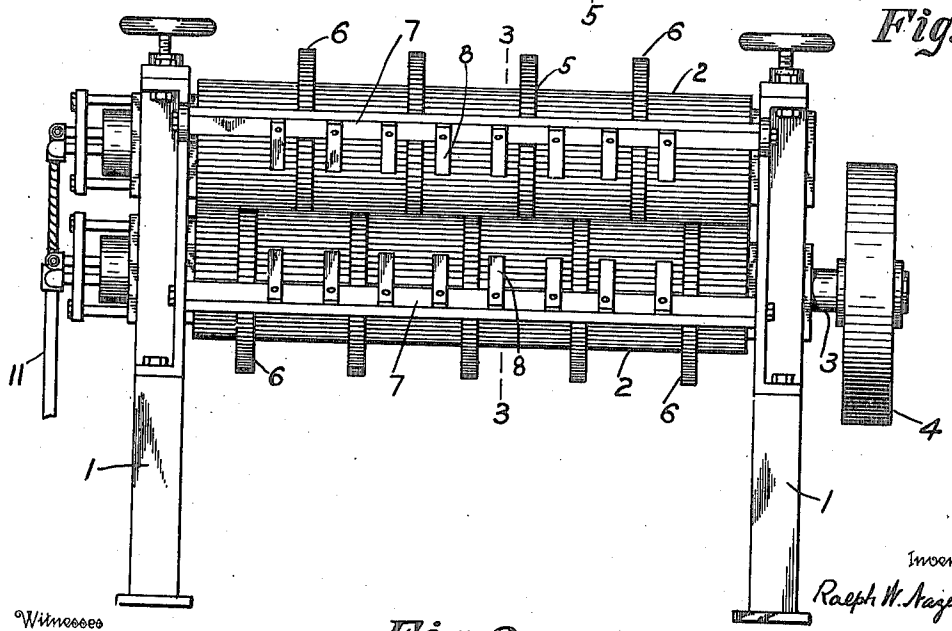

Fig. 2

Witnesses

Jos. S. Denny Jr.

Marjory D. Graf

Inventor

Ralph W. Nazel

By

Chas. A. Butler

Attorney

UNITED STATES PATENT OFFICE.

RALPH W. NAZEL, OF PHILADELPHIA, PENNSYLVANIA.

CORRUGATING-MACHINE.

1,161,510. Specification of Letters Patent. Patented Nov. 23, 1915.

Application filed December 11, 1914. Serial No. 876,603.

To all whom it may concern:

Be it known that I, RALPH W. NAZEL, a citizen of the United States, residing at Philadelphia, in the county of Philadelphia and State of Pennsylvania, have invented certain Improvements in Corrugating-Machines, of which the following is a specification.

My invention is a machine designed to provide improved means for corrugating sheeted material, particularly paper. In the use of corrugating machines, the moisture of the paper and the tendency of the corrugations formed therein to expand frequently cause the product to stick to one of the rolls through which it is passed.

It is a primary object of my invention to provide a machine having efficient means for preventing this sticking tendency by positively detaching the paper from the rolls as it passes therethrough.

The characteristic features of my improvements will more fully appear in the following description and the accompanying drawings.

In the accompanying drawings, Figure 1 is an end elevation of a machine embodying my invention; Fig. 2 is a rear elevation of the same; Fig. 3 is a sectional view taken on the line 3—3 of Fig. 2; Fig. 4 is an enlarged sectional view taken transversely through one of the rolls in the plane of a circular channel thereof; Fig. 5 is a sectional view taken on the line 5—5 of Fig. 4; and Fig. 6 is a sectional view taken transversely through the roll axes of a modified construction.

The machine illustrated in the drawings comprises the housings 1 having the meshing corrugated rolls 2 journaled therein, the lower roll having a shaft 3 with a driving pulley 4 fixed thereon. These rolls are provided with the respective staggered circular channels 5 forming tracks or ways for guiding corrugated planetary rings 6 of larger diameter than the respective rolls and having planetary movements relative thereto, the rings having corrugations similar to those of the rolls and being kept in proper registry therewith by reason of their meshing relations thereto. Bars 7 are carried by the housings and are provided with the stationary fingers 8 projecting toward the bight of the rolls to supplement the action of the rings in detaching the paper 9 from the rolls as it is passed therethrough. As the sheet 9 is passed through the rolls 2, the rings 6 coact with the rolls to form continuous corrugating ribs along the lines of contact, and, by reason of their greater diameters, provide means beyond the bight of the intermeshing ribs for carrying the corrugated material away from each of the rolls to which it might otherwise stick. The fingers 8, which lap the rings on the opposite sides thereof, supplement this action. The rolls are hollow and suitably heated by a flame formed by gas introduced through the pipe 12 and air introduced through the pipe 11 by the pump 10.

Those skilled in the art will understand that various modifications may be made in the machine without departing from the spirit of my invention. For illustration, in Fig. 6, the rolls 2 are provided with plain differential rings 13, of larger diameters than the respective rolls, which run in the channels 5 in lieu of the corrugated rings 6 for the purpose of detaching the corrugated section of the sheet 14 from the corrugations of the rolls 2.

Having described my invention, I claim:

1. In a corrugating machine, a corrugated roll and a ring of larger diameter than said roll, said ring being carried on said roll and revoluble therewith.

2. In a corrugating machine, a corrugated roll provided with a circular way and a corrugated ring of larger diameter than said roll and controlled by said way.

3. In a corrugating machine, a pair of meshing corrugated rolls respectively provided with circular ways, in combination with similarly corrugated rings of larger diameter than said rolls respectively and controlled by said ways.

4. In a corrugating machine, a housing, meshing corrugated rolls journaled in said housing, said rolls being respectively provided with circular channels, and corrugated rings engaged in the channel or channels of the respective rolls, respectively meshing with the opposite roll and having planetary movements relative to the rolls on which they are mounted.

5. In a corrugating machine, intermesh-

ing corrugated rolls, means revolving with said rolls for detaching corrugated material therefrom, and stationary devices coacting with said means for detaching said material.

In testimony whereof I have hereunto set my name this 10th day of December, 1914, in the presence of the subscribing witnesses.

RALPH W. NAZEL.

Witnesses:
Jos. G. DENNY, JR.,
C. N. BUTLER.