March 6, 1956 P. A. TOENSMEIER 2,737,326

CAN CARRIER

Filed March 2, 1955 2 Sheets-Sheet 1

FIG. 1

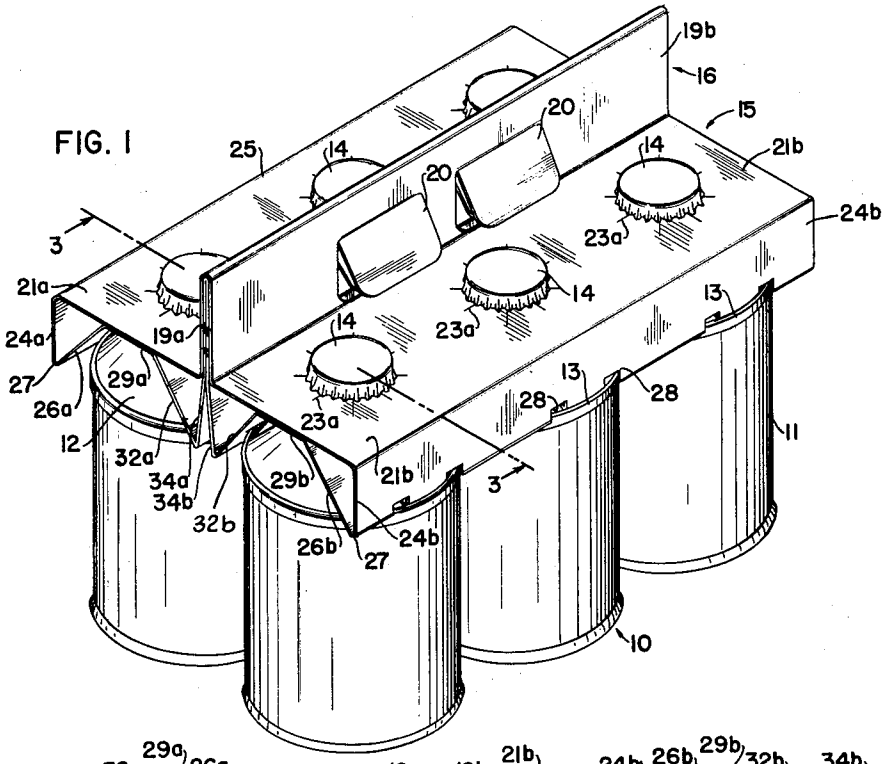

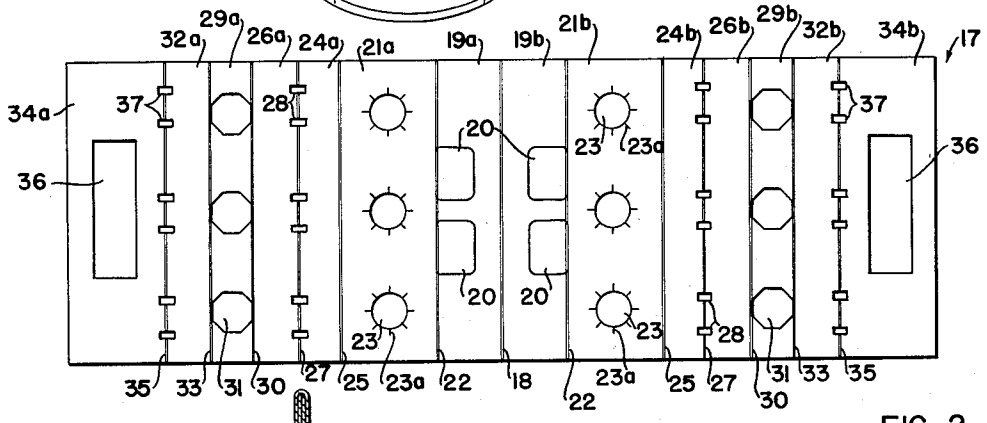

FIG. 2

FIG. 3

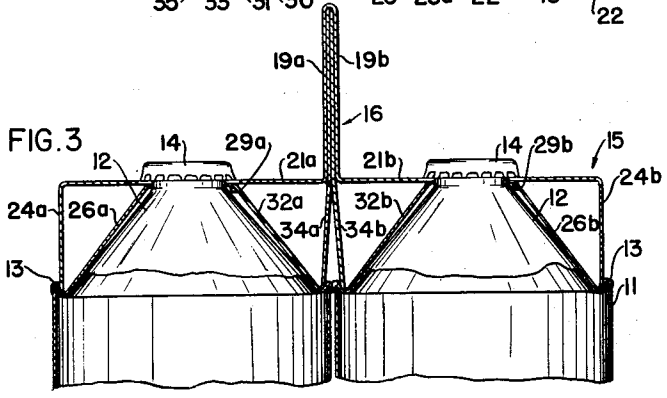

INVENTOR.
Patrick A. Toensmeier
BY Pennie Edmonds Morton Barrows & Taylor
ATTORNEYS

March 6, 1956 P. A. TOENSMEIER 2,737,326

CAN CARRIER

Filed March 2, 1955 2 Sheets-Sheet 2

FIG. 4

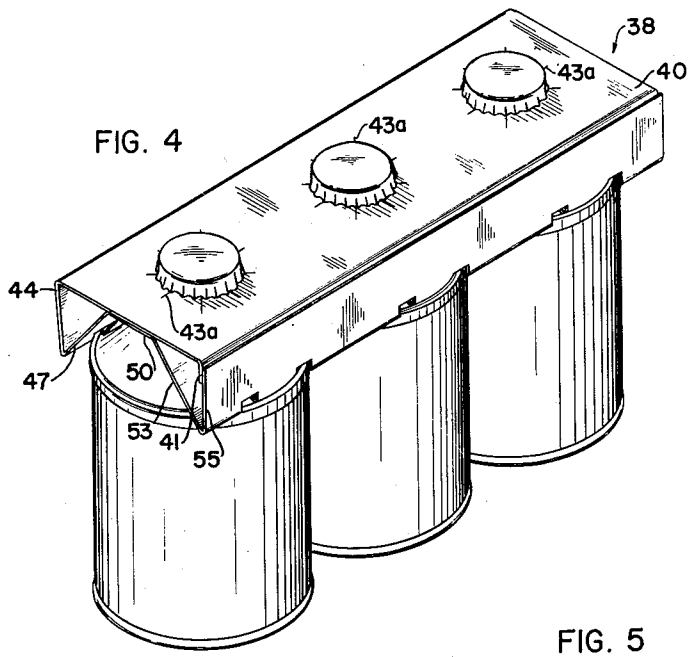

FIG. 5

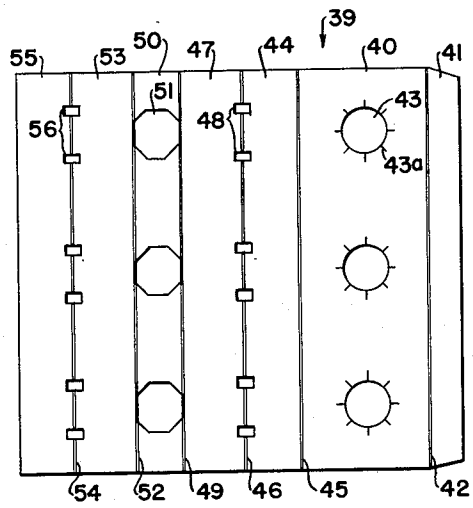

FIG. 6

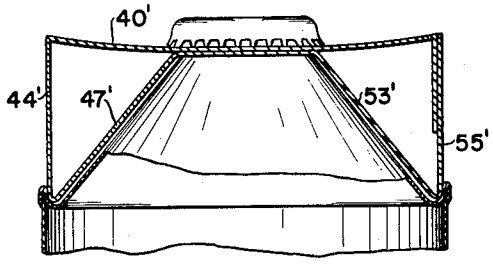

INVENTOR.
Patrick A. Toensmeier
BY
Pennie Edwards Morton
Barrows & Taylor,
ATTORNEYS

United States Patent Office 2,737,326 Patented Mar. 6, 1956

2,737,326

CAN CARRIER

Patrick A. Toensmeier, Hamden, Conn., assignor to The New Haven Board & Carton Company, New Haven, Conn., a corporation of Connecticut

Application March 2, 1955, Serial No. 491,604

12 Claims. (Cl. 224—45)

This invention relates to carriers for a plurality of cans and is concerned more particularly with a novel carrier for cans of the type having a chime and a cone top extending upward from the chime and terminating in a neck closed by a cap. The new carrier is formed from a single blank of paperboard and is constructed to grip the cans beneath their caps and, at the same time, to interlock with the chimes of the cans, so that the cans are firmly held. The carrier is of simple construction and requires a relatively small amount of board and the cans can be quickly placed in it and removed from it.

For a better understanding of the invention, reference may be made to the accompanying drawings, in which

Fig. 1 is a view in perspective of one form of the new carrier;

Fig. 2 is a plan view of the blank employed in forming the carrier of Fig. 1;

Fig. 3 is a sectional view on the line 3—3 of Fig. 1;

Fig. 4 is a view in perspective of another form of the new carrier;

Fig. 5 is a plan view of the blank employed in forming the carrier of Fig. 4; and

Fig. 6 is a transverse sectional view of a modified form of the carrier of Fig. 4.

The carrier of Fig. 1 is constructed to carry six cans **10**, each of which has a cylindrical body **11** and a cone top **12** connected to the body by a seam forming an upstanding chime **13**. The cone top terminates in a neck closed by a cap **14**, which is shown as of the crown type held in place by crimping. Such a cap has a fluted lower edge, which projects outwardly and forms a shoulder.

The carrier **15** is constructed to carry the cans in two rows of three each and provides a handle **16** projecting upwardly between the rows. The carrier is formed from the blank **17** by a series of folding operations.

The blank is symmetrical about a central crease line **18** and is made up of a group of sections or panels as follows. Panels **19***a*, **19***b* connected together along the central crease line are plies of the handle, and, in the erected carrier, the panels lie face to face. Each panel is formed with a pair of tabs **20** lying in openings through the panel and, when the panels lie face to face, the tabs therein lie in registry, so that the tabs on one panel can be pushed through the openings through the other panel to displace the tabs therein. The pairs of tabs may then be turned upwardly against the face of the second panel to provide finger openings through the handle **16**. The tabs provide smooth surfaces at the tops of the finger openings and help to maintain the plies of the handle in tight contact.

The panels **21***a*, **21***b* lying outwardly from panels **19***a*, **19***b*, respectively, and connected thereto by crease lines **22** are upper top walls of the carrier and each panel **21***a*, **21***b* has a row of three openings **23**, through which the necks of cans may be passed. The diameter of each opening is less than the diameter of the lower fluted edge of a can cap and, in order that the caps may be passed through the openings when placing the bottles in the

carrier, the wall of each opening is formed with a group of radial cuts **23***a*. Adjacent cuts define tongues, which are flexible and may be sprung aside to permit a cap to pass through the opening, after which the tongues snap back into place beneath the fluted edge of the cap.

Outer vertical wall panels **24***a*, **24***b* are connected to panels **21***a*, **21***b*, respectively, by crease lines **25**. The panels **24***a*, **24***b* have a width equal to or slightly greater than the vertical distance between a plane through the fluted edge of a cap and a similar plane through the inner bottom edge of the chime of the can.

Outer inclined wall panels **26***a*, **26***b* are connected to panels **24***a*, **24***b*, respectively, by crease lines **27**. Each inclined wall panel has a width approximately equal to the distance in a plane containing the axis of a can from the fluted edge of the can cap to the inner bottom edge of the can chime. The vertical wall panels **24***a*, **24***b* and the inclined wall panels **26***a*, **26***b* connected thereto have cut-out openings **28** extending across the line **27**. The openings **28** are in pairs and each opening has a length equal to or slightly greater than about twice the height of the chime of a can.

Lower top wall panels **29***a*, **29***b* are connected to panels **26***a*, **26***b* by crease lines **30** and each of the lower top wall panels has a row of three openings **31**, which are sufficiently large to permit the cap on a can to be passed freely therethrough. Inner inclined wall panels **32***a*, **32***b* are connected to panels **29***a*, **29***b*, respectively, by crease lines **33** and are of the same width as wall panels **26***a*, **26***b*.

The panels **34***a*, **34***b* forming inner plies of the handle are connected to panels **32***a*, **32***b* by crease lines **35** and have a width equal to or slightly greater than the width of a handle panel **19***a* or **19***b* plus the vertical distance between a plane through the fluted edge of a cap and a similar plane through the inner bottom edge of the chime of a can. Panels **34***a*, **34***b* have openings **36**, which are large enough to permit the pairs of tabs **20** on the handle plies **19***a*, **19***b* to be passed freely therethrough. The panels **32***a*, **32***b* and panels **34***a*, **34***b* have cut-outs **37**, which extend across crease lines **35** and are long enough to receive the chime of a can. Cut-outs **37** are arranged in pairs.

In erecting the blank to form the carrier, the blank is folded along the crease line **18**, so that the panels **19***a*, **19***b* are brought face to face. The two parts of the blank at opposite sides of the central crease line **18** are then folded outwardly away from each other along the crease lines **22**, so that these parts of the blank lie at right angles to the handle panels **19***a*, **19***b*. The two parts of the blank are next folded on the crease lines **25**, so that the outer vertical wall panels **24***a*, **24***b* lie at right angles to the upper top wall panels **21***a*, **21***b* and parallel to each other. The outer end portions of the blank are folded toward each other on crease lines **27** and folded in the opposite direction on crease lines **30**. The lower top walls **29***a*, **29***b* are brought into contact with the under surfaces of the upper top walls **21***a*, **21***b* and openings **31** are brought into registry with openings **23**. The outer portions of the blank are next folded on crease lines **33** and **35** and the inner handle panels **34***a*, **34***b* are inserted into the space between panels **19***a*, **19***b*. The tabs **20** on one panel **19***a*, **19***b* may be pushed through the openings in the other panel, the tabs passing through openings **36** in panels **34***a*, **34***b* in such movement.

The cans may now be mounted in the carrier by passing their caps upwardly through openings **31** in the lower top walls and through the corresponding openings **23** in the upper top walls. As the cans are thus moved into place, the chimes enter the recesses in the lower edges of the pairs of walls **24***a*, **26***a* and **24***b*, **26***b* formed by the openings **28**, which extend across the crease lines

27 between the walls of each pair. The chimes also enter the recesses formed in the lower edges of the pairs of walls 32*a*, 34*a* and 32*b*, 34*b* formed by the openings 37, which extend across the crease lines 35 between the walls of each pair. When the chime of a can enters adjacent recesses across one of the crease lines 27 or 35, parts of the crease line lie on opposite sides of the chime and are interlocked with the chime so that the chimes of the cans hold the vertical walls 24*a*, 24*b* and 34*a*, 34*b* from being displaced away from the can axes. At the same time, the inner and outer inclined walls 26*a*, 26*b* and 32*a*, 32*b* extending from the opposite edges of the bottom top walls to the bases of the chimes act as braces to prevent sagging of the top walls when the carrier is lifted and the weight of the cans is applied to the upper top walls through the can caps. When the carrier is filled, the upper chimes of corresponding cans in the two rows lie in contact between the inner vertical walls 34*a*, 34*b* of the carrier and the cans are otherwise out of contact.

The carrier 38 shown in Fig. 4 is for carrying three cans in a single row. The carrier is not provided with a handle, since the carrier has an overall width slightly less than the width of the cans and may be easily gripped by the hand. The blank 39 employed in forming the carrier 38 comprises an upper top panel wall 40 having a glue flap 41 secured along one edge and separated therefrom by a crease line 42. Panel 40 is formed with three openings 43, which are of sufficient diameter to permit insertion of the neck of a can but of less diameter than that of the fluted end of the cap of a can. The wall of each opening is formed with radial cuts 43*a* defining flexible tongues, which may be sprung aside to permit passage of the cap on a can. At the side opposite that along which the glue flap 41 extends, panel 40 is connected to a vertical wall panel 44 by a crease line 45 and panel 44 is connected along a crease line 46 to an inclined wall panel 47. Panels 44 and 47 are provided with pairs of openings 48 extending across the crease line 46 and adapted to form recesses in the erected carrier for receiving the chimes of cans.

The inclined wall panel 47 is connected by a crease line 49 to a lower top wall panel 50 having three openings 51, which are sufficiently large to permit the free passage of the cap of a can therethrough. Panel 50 is connected along a crease line 52 to an inclined wall panel 53, which is in turn connected along a crease line 54 to a vertical wall panel 55. Panels 53 and 55 are provided with pairs of openings 56 extending across crease line 54 and adapted to form recesses in the erected carrier for receiving the chimes of cans. The inclined wall panels 47, 53 have a width approximately equal to the distance in a plane containing the axis of a can from the fluted edge of the can cap to the inner bottom edge of the can chime.

In converting the blank 39 into the carrier 38, the panels of the blank are folded along the crease lines, so that the vertical wall panels 44 and 55 lie at right angles to the top wall panels 40 and 50 and the two top wall panels lie in contact with openings 51 registering with openings 43. The glue flap 41 is then folded at right angles to upper top wall panel 40 and secured by adhesive to the inner surface of the vertical wall panel 55. If preferred, the glue flap 41 may be secured to the inner surface of the vertical wall panel 55 as the first step, after which the blank may be folded along the crease lines, as described. The necks of three cans are then passed through aligned openings 51 and 43 with the caps displacing the tongues defined by cuts 43*a* and forming the walls of openings 43. When the caps have passed through openings 43, the tongues spring back beneath the lower edges of the caps and the cans are then held in place in the carrier. As the cans are being inserted, their chimes enter the recesses formed by the pairs of openings 48, 56 crossing the crease lines 46, 54, along

which the inclined and vertical walls are joined. The chimes thus lock the vertical walls and inclined walls in position and the inclined walls become effective as braces to hold the bottom top wall panel against the upper top wall panel and prevent the top wall panels from sagging when the carrier is lifted and the weight of the cans is imposed on the panels.

In the carrier shown in Figs. 4 and 5, the vertical wall panels 44 and 55 have a width approximately equal to the distance between planes through the fluted edge of the cap of a can and through the inner bottom edge of a chime of a can but, if desired, panels 44 and 55 may be made slightly wider with the advantageous results indicated in Fig. 6. In the carrier of Fig. 6, the vertical wall panels 44′ and 55′ are slightly wider than the distance between the planes described, while the width of the inclined wall panels 47′ and 53′ is approximately equal to the distance from the fluted edge of the cap to the inner bottom edge of a chime. When the caps of cans are inserted through the aligned openings through the upper and lower top walls of the carrier and the chimes enter the openings in the lower edges of the inclined and vertical wall panels, the extra width of the vertical wall panels causes the outer edges of the upper top wall panel 40′ to spring up. When the loaded carrier is picked up, the weight of the cans causes the central areas of the upper and lower top wall panels to sag with the result that the lower edges of the inclined and vertical wall panels are more firmly wedged against the chimes and the cans are securely held.

The results obtained in the carrier of Fig. 4 by increasing the width of the vertical wall panels may also be obtained in the carrier of Fig. 1. In the latter case, the width of the outer vertical wall panels 24*a*, 24*b* is made slightly greater than the vertical distance between the planes through the fluted edge of the can cap and through the inner bottom edge of the can chime and the panels 34*a*, 34*b*, the lower parts of which serve as inner vertical walls, are given a width slightly greater than the distance between the planes mentioned plus the width of a handle panel 19*a* or 19*b*. When the carrier so made is loaded, the upper top wall panels 21*a*, 21*b* are sprung upwardly at their inner and outer edges in the manner of the wall panel 40′ and the carrier is put under stress such that the cans are tightly gripped.

As will be apparent from the foregoing, the new carrier can be made economically, since no board is wasted, and it is simple to erect and load. The cans are held securely in the carrier and substantially all of the cans except the cone tops are exposed. The printed labels on the cans are thus in full view and confusion in purchasing is avoided.

I claim:

1. A carrier for a plurality of cans in a row, each can having a chime and a cone top extending upward therefrom and terminating in a neck closed by a cap, which comprises upper and lower top walls having registering openings receiving the necks of the cans with the openings in one wall normally of less diameter than the maximum diameter of the can caps, inclined walls secured to the opposite edges of the lower top wall and having a width substantially equal to the distance in a plane containing the axis of a can from the fluted edge of the can cap to the inner bottom edge of the can chime, and vertical walls connected to the lower edges of the respective inclined walls and extending to the opposite edges of the upper top wall, the inclined and vertical walls having recesses in their lower edges for receiving the chimes of the cans at diametrically spaced points.

2. The carrier of claim 1, in which each connected edge of an inclined and a vertical wall has a pair of recesses for receiving the chime of each can at two places relatively close together.

3. The carrier of claim 1, in which at least one of the

vertical walls is connected to an edge of the upper top wall.

4. The carrier of claim 1, in which the walls of the openings, which are of less diameter than the maximum diameter of the caps, are cut radially to form tongues distortable to permit passage of the caps.

5. The carrier of claim 1, in which the upper top wall has openings normally of less diameter than the maximum diameter of the caps and the lower top wall has openings, through which the caps may pass freely.

6. The carrier of claim 1, in which the vertical walls are connected to the opposite edges of the upper top wall.

7. The carrier of claim 6, in which the vertical walls have a width slightly greater than the vertical distance between planes through the fluted edge of the cap of a can and the inner bottom edge of the can chime.

8. A carrier for a plurality of cans in two parallel rows, each can having a chime and a cone top extending upward therefrom and terminating in a neck closed by a cap, which comprises a pair of upper top walls, each extending along a row of cans and having openings for the necks of the cans, a handle formed of a pair of reversely folded panels connected together at their outer edges and having their inner edges connected to the inner edges of the upper top walls, a pair of lower top walls having openings registering with those in respective upper top walls, the openings in one pair of top walls being normally of less diameter than the maximum diameter of the caps of the cans, inclined walls connected to the opposite edges of each lower top wall and having a width substantially equal to the distance in a plane containing the axis of a can from the fluted

edge of a can cap to the inner bottom edge of the can chime, and vertical walls connected to the lower edges of the respective inclined walls, the connected edges of the inclined and vertical walls having recesses for receiving the chimes of the cans at diametrically spaced points and the outer vertical walls being connected to the outer edges of the upper top walls while the inner vertical walls extend upwardly between the panels of the handle.

9. The carrier of claim 8, in which each connected edge of an inclined and a vertical wall has a pair of recesses for receiving the chime of each can at two places relatively close together.

10. The carrier of claim 8, in which the walls of the openings, which are of less diameter than the maximum diameter of the caps, are cut radially to form tongues distortable to permit passage of the caps.

11. The carrier of claim 9, in which the upper top walls have the openings with radial tongues and the lower top walls have openings, through which the caps may pass freely.

12. The carrier of claim 8, in which the outer vertical walls have a width slightly greater than the vertical distance between planes through the fluted edge of the cap of a can and the inner bottom edge of the can chime and the inner vertical walls have a width slightly greater than said distance plus the width of a handle panel.

References Cited in the file of this patent

UNITED STATES PATENTS

2,330,699	Flamm	Sept. 28, 1943
2,603,923	Chidsey, Jr.	July 22, 1952
2,680,038	Gray	June 1, 1954