Dec. 19, 1939. J. A. ZUBLIN 2,184,067

DRILL BIT

Filed Jan. 3, 1939

Fig. 1.

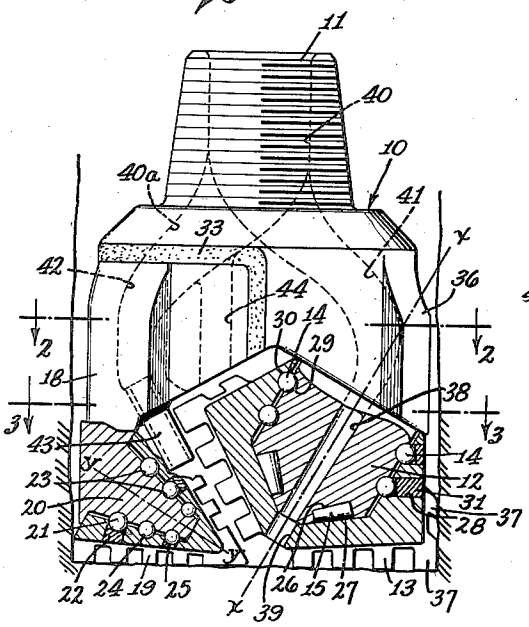

Fig. 2.

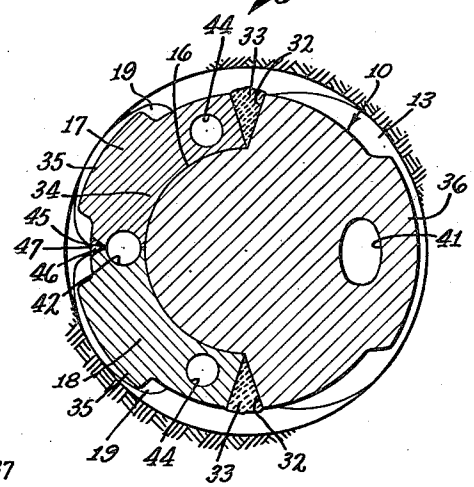

Fig. 3.

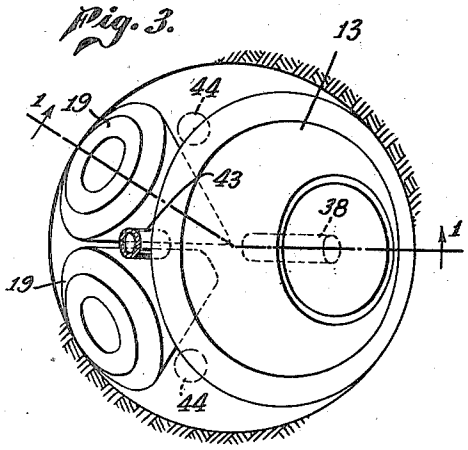

Fig. 4.

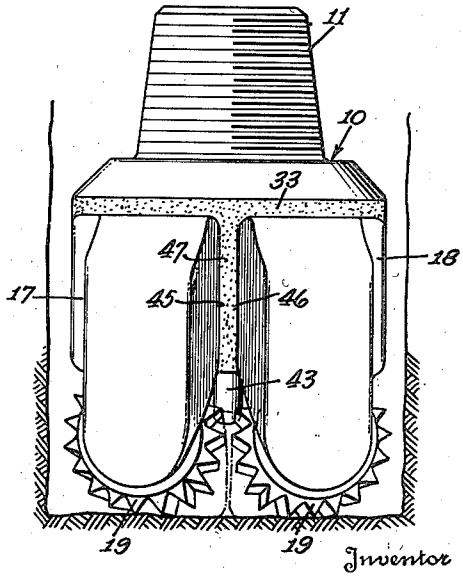

Inventor

JOHN A. ZUBLIN,

By Bernard Kriegel

Attorney

Patented Dec. 19, 1939 2,184,067

UNITED STATES PATENT OFFICE

2,184,067

DRILL BIT

John A. Zublin, Los Angeles, Calif.

Application January 3, 1939, Serial No. 248,994

11 Claims. (Cl. 255—71)

This invention relates generally to drill bits, and particularly to that type of bit adapted for the rotary drilling of bore holes, such as oil wells and the like.

It is an object of the present invention to provide a bit having a plurality of roller cutters, at least one of which is of large size compared with the diameter of the other cutters, in order that it can have ample bearing area on its supporting body and a correspondingly great extent of cutting or tooth surface for operation upon the formation.

A further object of the invention resides in the provision of a bit having a plurality of roller cutters, at least one of which is of large diameter compared with the diameter of the other cutters, and rotatable about an axis of much steeper pitch than the other cutters, to provide cutting elements for operation upon a large area of the bottom of the hole, and also an increased extent of cutting elements for reaming action upon the sides of the hole, to maintain its gauge.

Still another object of the invention is to conduct circulating fluid through a drill bit cutter for direct action upon the bottom of a hole and also upon a plurality of other cutters.

Another object of the invention is to provide an improved arrangement of fluid conducting and discharging means, whereby to clean the hole and bit of cuttings.

Another object of the invention is to provide a bit whose component parts are readily assembled and disassembled, to obviate the need for discarding an entire used bit, permitting salvage of unworn or easily repaired parts.

This invention possesses many other advantages and has other objects that will become apparent from a consideration of an embodiment of the invention. For this purpose, a form is shown in the drawing accompanying and forming part of the present specification, which embodiment will now be described in detail, illustrating the general principles of the invention. However, it is to be understood that this detailed description is not to be taken in a limited sense, since the scope of the invention is best defined by the appended claims.

In the drawing:

Figure 1 is an elevation of one form of drill bit, parts being in section taken generally along the line 1—1 of Figure 3;

Figure 2 is a cross-section taken along the plane 2—2 in Figure 1;

Figure 3 is a diagrammatic exemplification of the relative positions occupied by the roller cutters and fluid conduit means, taken generally along the plane 3—3 of Figure 1; and

Figure 4 is a side elevation of the drill bit, as seen from the left of Figure 1.

The drilling tool includes a main bit body 10 having a tapered threaded pin 11 at its upper end for attachment of the tool to a drilling string (not shown). This body portion carries a spindle 12, preferably integrally therewith, on which is rotatably mounted a roller cutter 13 of generally conical form. Antifriction balls 14 and tapered rollers 15 are preferably interposed between the spindle and cutter to insure their free relative rotation.

The main bit body is set back below its tapered pin portion to provide a circumferential recess 16 extending approximately half way therearound. A plurality of supports 17, 18 is adapted to fit in this recess and to be welded therein to the main bit body, thereby producing a functionally integral shank capable of rotatably carrying not only the cone cutter 13 previously described, but also other cone cutters 19, each of which is rotatably carried by a spindle 20 extending from each support through the medium of the anti-friction bearing balls 21.

The bit can be assembled by placing each of the small cones 19 on its spindle 20 and inserting the bearing balls 21 through the respective holes 22 and into the respective raceways 23, 24 provided on the periphery of the spindle and the inner bearing portion of each cutter. Thereafter, the holes 22 can be filled with suitable plugs 25, welded or otherwise secured in place, having inner portions completing the continuity of the raceways in the cutter. The large cone 13 can be mounted on its spindle 12 by inserting the tapered rollers 15 in the spindle raceway 26 and then placing the cutter over the spindle with its raceway 27 in engagement with the rollers. The bearing balls 14 can then be inserted through the respective holes 28 in the cutter into the respective raceways 29, 30 in the outer and inner portions of the spindle and cutter. Thereafter, the holes can be suitably filled in by plugs 31, welded or otherwise suitably secured in the cutter.

Upon assembly of the large cone 13 on its spindle and the assembly of each of the small cones 19 on its associated spindle, the supports 17, 18 for the smaller cones can be placed against the main bit body 10 and welded thereto by filling in the groove 32 between the supports and the body with welding material 33, which groove extends along the sides of the supports and also

along their top portions. The portions 34 of the supports welded to the bit body in this manner are arcuate in shape in order to fit snugly against the curved back surface of the set back portion of the body. The supports also have an outer reinforcing rib 35 permitting the use of a larger spindle 20 for mounting the small cone cutters 19 and thereby adding to the sturdiness and strength of the bit as a whole. Similarly, the main bit body 10 is provided with a reinforcing rib 36, serving to increase the load carrying capacity of the tool.

It is to be noted that the conical cutter 13 is mounted on the main bit body spindle 12 to rotate about an axis x—x of relatively steep pitch. This arrangement permits the use of a cutter of large base diameter mounted upon a spindle of large diameter. As a result, the cutter 13 has a large bearing area on its supporting spindle and also a large extent of cutting or tooth surface for operation upon the bottom of the hole being produced. In addition, a large extent of cutting teeth 37 can be arranged around the back cone portions of the cutter for operation upon the sides of the hole, functioning as a reamer to maintain the bore to gauge.

The smaller cone cutters 19 are preferably arranged circumferentially adjacent one another, their central plane being substantially diametrically opposite the large cone cutter 13. These smaller cutters are therefore in a position to counterbalance inwardly directed side wall thrusts of the formation against the large cone. Moreover, they will assist in the removal of the formation at the bottom of the hole by virtue of the ability of their cutter teeth to penetrate this region. At least one of these small cutters extends substantially to the axis of the hole to prevent a small core from remaining at the hole axis. In any event, the cutter teeth on the large cone would disintegrate any core since the inner row of teeth overlaps the axis of the hole as the cutter rotates on its spindle.

The small cone cutters 19 also have back cone portions tending to maintain the proper bore diameter. However, its reaming effectiveness will not be as great as that of the large cone since the latter, by being mounted at a steeper pitch, can have a much greater length of teeth acting upon the side walls of the hole. For that matter, an additional row of reaming teeth could be provided on the back portion of the large cone above the two rows of reaming teeth illustrated.

The large spindle 12 for the large cone provides ample space for a fluid passage 38 extending through this spindle and through an opening 39 at the apex portion of the cone 13. The main bit body 10 has an internal passage 40 from which drilling mud or other fluid can be conveyed through an interconnecting channel 41 in the bit body to the spindle passageway 38 and through the cutter opening 39 for discharge against the bottom of the hole at an angle which will cause a jet of cleaning fluid to sweep transversely across the bore to remove all cuttings therefrom. The instantaneous plane of discharge from the large cone is preferably such that the jet of fluid will also sweep between the adjacent cone cutters 19 and clean their teeth of adhering matter in order that they can effectively penetrate the formation.

Circulating fluid is also conducted from the shank passageway 40 through a channel 42 and through a nozzle 43 inclined toward the shank axis and extending between the two small cutters and the large cutter. This nozzle can extend as close to the bottom of the hole as the cones permit, being capable of directing a discharge of fluid onto the teeth of the two small cutters and also effecting cleaning of the teeth on the large cone. Additional fluid circulating means can extend through the bit for action upon the cutters. Channels 44 on opposite sides of the nozzle channel 42 can extend substantially vertically through the arcuate cutter supports 17, 18 and into communication with the bit channel 40. These last-mentioned fluid discharge means will direct fluid against the back cone portions of the large cutter and also partially toward the bottom of the hole and the teeth on the small cutters. By reason of the fluid circulating and discharge system disclosed, assurance is had that the entire bit and the bottom of the hole will be maintained free from cuttings during the effective life of the tool.

The nozzle 43 positioned between the cutters is held in place by the two small cutter supports 17, 18, its communicating channel 42 being formed in abutting side edges 45, 46 of each support, these edges cooperating with one another to provide the necessary enclosure. The upper portion of this channel is aligned with a channel 40a in the main bit body. Similarly, the side channels 44 extend through the cutter supports with their upper portions adjacent channels in the main bit body forming a continuation thereof.

When the nozzle arrangement between the two small cutter supports is used, the supports 17, 18 can be integrated after inserting the nozzle 43 in the conduit 42 formed between the abutting edges 45, 46, by welding in material 47 in a groove formed between those edges. The nozzle 43 can also be welded to the bottom of the supports 17, 18. These two supports can then be placed on the main bit body within the circumferential recess 16 and the welding material 33 deposited to secure the parts together, in the manner aforementioned. All of the fluid channels in the small cutter supports will fall into proper alignment with their continuations in the main bit body.

While the large cone rotates about a steeply pitched axis x—x, the smaller cones rotate about axes y—y making a much smaller angle with the bottom of the hole. The different angular extents of these axes permit the use of the large cone since ample portions of it can extend on the same side of the center line of the bit as the small cone. The steeper pitch of the large cone axis also means that inwardly directed thrusts by the formation on the reaming teeth 37 of the cutter due to their engagement with the walls of the hole are predominantly radial of the large spindle, being absorbed through a plurality of bearing elements and over a larger bearing surface. The unit load on these bearing portions is therefore less than when a smaller spindle is used and the life of the bearings is correspondingly increased. In the specific illustration in the drawing, the inclination of the axis x—x of the large cone is about twice the angular extent of that of the smaller cones.

The manner of welding the component parts of the bit together permits use of the main bit body for several runs. Disassembly can take place through burning or otherwise cutting away the welds 33 in the groove between the small cutter supports and the main bit body. Removal of the plugs 25, 31 filling the holes in the cutters will permit disassembly of the cutters and their

replacement with new units, which can be assembled onto the spindles, and the small cutter supports re-welded to the main bit body.

I claim:

1. An earth boring drill including supporting means carrying a generally conical roller cutter for rotation about a steeply pitched axis and one or more generally conical roller cutters for rotation about respective axes of much lesser pitch, said first-mentioned cutter having cutting portions on a conical surface thereof engageable with the bottom of the bore, and reamer cutting portions engageable with the walls of the bore, the pitch of said first-mentioned axis being such that thrust between said reamer cutting portions and the walls of the bore will be directed predominantly radially of said axis.

2. An earth boring drill including supporting means carrying a generally conical roller cutter for rotation about a steeply pitched axis and a pair of circumferentially adjacent generally conical roller cutters substantially diametrically opposite said cutter and mounted for rotation about respective axes of much lesser pitch, said first-mentioned cutter having cutting portions on a conical surface thereof engageable with the bottom of the bore and reamer cutting portions on a back cone surface thereof engageable with the walls of the bore, the pitch of said first-mentioned axis being such that thrust between said reamer cutting portions and the walls of the bore will be directed predominantly radially of said axis.

3. An earth boring drill as defined in claim 2, the pitch of the axis of said first-mentioned cutter being substantially twice as great as the pitch of the axes of the other cutters.

4. An earth boring drill including supporting means carrying a pair of circumferentially adjacent generally conical roller cutters and a single generally conical roller cutter substantially diametrically opposite said pair of cutters, a fluid channel in said supporting means opening through said single cutter and adapted to direct discharge of fluid against the bottom of the bore and between said circumferentially adjacent cutters.

5. An earth boring drill including a shank having a plurality of spindles, a pair of circumferentially adjacent generally conical cutters each rotatably mounted on a spindle, a single generally conical cutter substantially diametrically opposite said pair of cutters and rotatably mounted on another spindle, a fluid passage in said shank, said single cutter having an opening through its apex registering with a fluid conduit in its supporting spindle communicating with said fluid passage, fluid exiting said cutter apex being adapted to act against the bottom of the bore, to be deflected thereby across the bore for passage between the adjacent cutters.

6. An earth boring drill including a shank carrying a pair of circumferentially adjacent generally conical roller cutters and a single generally conical roller cutter substantially diametrically opposite said pair of cutters, a fluid passage in said shank, and a nozzle communicating with said passage and extending from said shank between said adjacent cutters and generally parallel to their adjacent conical surfaces to direct a stream of fluid against the cutters and the bottom of the hole.

7. An earth boring drill including a main body having a spindle extending therefrom, said body having a set back providing a recess with an arcuate base, a plurality of adjacent detachable supports in said recess, each having an arcuate portion abutting said base and welded to the walls of said recess, a spindle extending from each support, and cutters rotatably mounted on said spindles.

8. An earth boring drill including a main body having a threaded connector on one end thereof and a spindle extending therefrom, said body having a set back forming a recess below said connector provided with an arcuate base and top and side walls, a plurality of adjacent detachable supports in said recess, each having an arcuate surface abutting said base and welded to the top and side walls defining said recess, a spindle extending from each support, and cutters rotatably mounted on said spindles.

9. An earth boring drill including a main body having a spindle extending therefrom, said body having a set back forming a recess defined by a base, top and side walls, a plurality of adjacent detachable supports in said recess, each welded to said walls and having a surface abutting said base, one or more channels in at least one of said supports adapted to discharge fluid into the bore, fluid conducting means in said main body communicating with said channels, and a spindle extending from each support, and cutters rotatably mounted on said spindles.

10. An earth boring drill including a main body having a spindle extending therefrom, said body having a set back forming a recess defined by a base, top and side walls, a plurality of mutually abutting detachable supports in said recess, each welded to said walls and having a surface abutting said base, a fluid channel formed by abutting support end portions, said supports being welded together in their abutting regions, a spindle extending from each support, and cutters rotatably mounted on said spindles.

11. An earth boring drill as defined in claim 10, a nozzle extending from said channel and secured to said supports.

JOHN A. ZUBLIN.