Sept. 1, 1931. V. J. MOHLER 1,821,108

PRINTING DEVICE

Filed Nov. 1, 1929

Fig. 6.

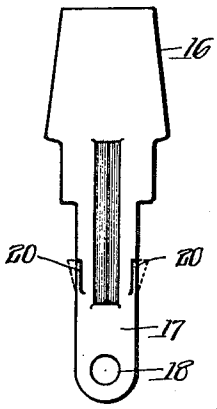

Fig. 1.

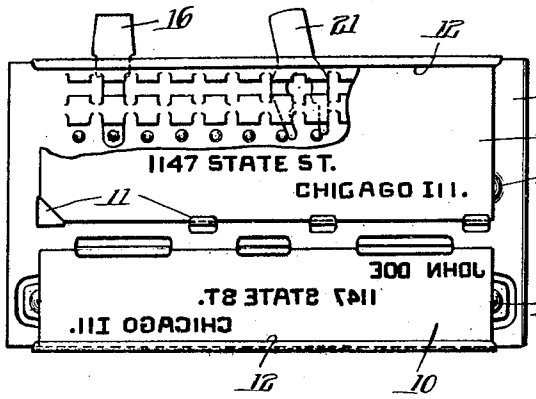

Fig. 7.

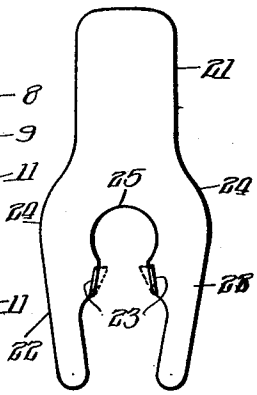

Fig. 2.

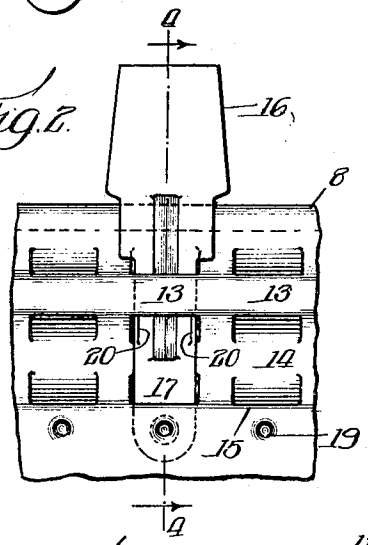

Fig. 3.

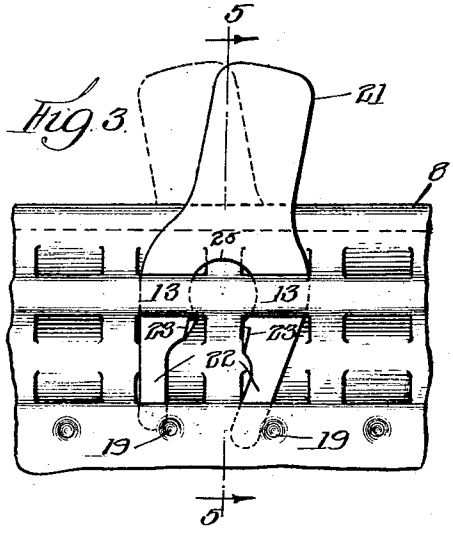

Fig. 4.

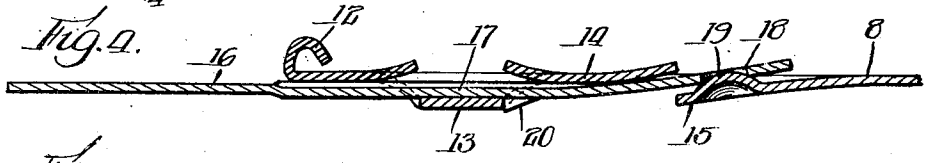

Fig. 5.

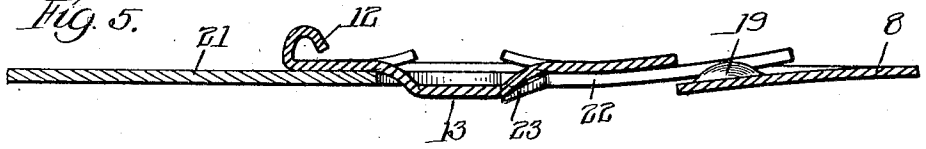

Inventor—
Valentine J. Mohler
By M. O. Belk Atty.

Patented Sept. 1, 1931 1,821,108

UNITED STATES PATENT OFFICE

VALENTINE J. MOHLER, OF RIVER FOREST, ILLINOIS, ASSIGNOR TO ADDRESSOGRAPH COMPANY, OF CHICAGO, ILLINOIS, A CORPORATION OF DELAWARE

PRINTING DEVICE

Application filed November 1, 1929. Serial No. 404,182.

This invention relates to printing devices of the kind which are adapted to be stored in cabinets according to a predetermined classification and to be run through addressing or printing machines and returned to storage position in the drawers of the cabinet without disturbing their classified arrangement. It has been the practice to provide the frame of the printing device with a plurality of keepers adapted to receive a detachable tab in a selected position, but there is always the liability that a detachable tab may become separated from its frame while the devices are being handled or while they are running through an addressing or printing machine and thus confuse the classification. It has also been the practice to equip some of these printing devices with switch tabs which can be swung from one position to another for general classification or for giving the printing device temporarily a special classification. These switch tabs have been pivotally mounted on the frames of the printing devices and the frames have been constructed specially at certain locations to receive the switch tabs which adds to the cost of manufacture. If the customer desires the switch tab in a special location the cost of manufacture is correspondingly increased.

One of the objects of the invention is to enable the frame to be made with standard keepers adapted to receive single tabs or switch tabs and to provide a novel tab which is adapted to be inserted by anyone in the keepers and to be permanently retained therein after insertion against removal.

A further object of the invention is to provide a tab of novel construction having one or more parts to interlock with the keeper on the frame of a printing device after it has been inserted therein to permanently secure the tab to the printing device frame.

And a still further object of the invention is to provide a separate switch tab which can be easily inserted in the keepers of a printing device frame by anyone and which upon insertion will automatically become locked against removal but at the same time be capable of a limited pivotal or swinging switching movement in the keepers.

In the accompanying drawings I have illustrated selected embodiments of the invention and referring thereto,

Fig. 1 is a front view of a printing device wherein the card is broken away to show more fully the single tab and the switch tab with which the device is equipped.

Fig. 2 is a detail enlarged back view showing a portion of the frame of the printing device with the single tab engaged therewith.

Fig. 3 is a similar view showing the switch tab.

Fig. 4 is an enlarged sectional view on the line 4—4 of Fig. 2.

Fig. 5 is an enlarged sectional view on the line 5—5 of Fig. 3.

Fig. 6 shows a single tab.

Fig. 7 shows a switch tab.

The printing device selected here for illustrating the invention comprises a sheet metal frame 8, an information card 9, a plate 10 having printing characters embossed thereon, and retaining devices 11 and beads 12 for detachably holding the card and plate on the frame. The frame is slit and struck up to provide sets of aligned keepers 13, 14, 15 to receive the tab, and any number of these keepers may be provided as the frame will accommodate. The single tab 16 has a stem 17 which is adapted to engage the keepers. It is customary to provide the frames with a stud 19 for each set of keepers to engage an opening 18 in the end of the stem of the tab to detachably secure the tab in place on the frame. While the stud and opening are not required for single tabs of this invention, the tabs are preferably provided with such openings so that they may be used on frames equipped with studs which are now in use or which may be sold for use. It will be understood that my single tabs may be used in the same frames and interchangeably with known single tabs in general use. But the studs are desirable for the switch tabs as hereinafter explained. The single tab 16 has two shoulders 20 at the side edges of its stem to engage the lower edge of the keeper 13. These shoulders project at right-angles to the stem and face toward the upper end of the tab to engage the lower edge of the keep-

er 13 to prevent the tab from being withdrawn from the keepers. The tab is inserted in the keepers in the usual way, sufficient force being used to cause passage of the shoulders past the keepers, and the shoulders are tapered so that they will not materially retard the insertion of the tab. One shoulder may be sufficient but I prefer to provide a shoulder at each side edge of the stem to lock the tab to the frame. The switch tab 21 is bifurcated to provide two stems 22 which fit in adjacent keepers, and these stems have integral tapered shoulders 23 which project outward at right-angles to the stems to engage the lower edges of the keepers 13 and lock the switch tab to the frame. The switch tab is widest at the top of the stems and it has curved side edges 24 which engage the outer edges of the upper keeper openings in which the tab is secured and serve to guide the tab in its switching movement and to hold the tab against bodily movement lengthwise of the printing device. The crotch 25 of the switch tab between the stems is preferably made circular in shape to straddle that part of the frame between the adjacent keepers 13, 13 and to permit free switching movement of the tab. In switching the tab from one position to another the edges 24 slide against the ends of the upper keeper openings and thereby serve as guides to control the movement of the tab and the engagement of these edges with said ends serves to laterally confine the tab in the keepers. The lower ends of the stems ride over the studs 19 and the parts are shaped and proportioned so that the tab may be switched with a swinging or rocking movement from one position to another as indicated in Fig. 3 across the studs 19. In one position of the switch tab the stems will be located on one side of two adjacent studs, in the other position of the switch tab the stems will be located on the other side of these studs, and in each position the engagement of the stems with the studs will hold the tab in its adjusted position. The provision of the shoulders on the tabs is a simple addition to the tabs but it is of prime importance because it enables a single tab to be made in every other respect the same as it has been made heretofore and to be used in every way the same as it has been used heretofore except that it cannot be removed from the frame after being once inserted therein, and also because it enables a switch tab to be inserted by anyone in any desired location on a standard frame without the use of any tools and in substantially the same manner that single tabs have been inserted heretofore. When the single and the switch tab are inserted they become automatically locked to the frame so that they cannot thereafter be detached therefrom. I have shown the single tab and the switch tab on one printing device in the drawings for convenience in illustration and while they may be used on the same printing device it is not to be understood that they must be so used in practicing my invention. Furthermore I do not limit the invention to this particular printing device which has been selected as one of many to which the invention may be applied, nor do I limit the invention to the particular size or shape of the tabs for it will be appreciated that variations may be made therein for different printing devices; and therefore I reserve the right to make all such changes in the form, construction and arrangement of parts as may be necessary or desirable in adapting the invention for different printing devices or for other purposes within the scope of the following claims.

I claim:

1. A printing device tab having a stem, and an integral shoulder at one edge of the stem extending substantially at right-angles to the face of the stem.

2. A printing device tab having a stem, and a tapered integral lug on the stem having a shoulder extending substantially at right-angles to the face of the stem.

3. The combination of a printing device having a keeper, and a tab having a stem insertable in said keeper and provided with an integral shoulder extending substantially at right-angles to the stem, said shoulder adapted to interlockingly engage the keeper when the stem is inserted therein to permanently secure the tab to the printing device.

4. The combination of a printing device having a plurality of keepers, and a switch tab having spaced stems entered in adjacent keepers, said stems having shoulders thereon to interlockingly engage the keepers when the stems are inserted therein and prevent removal of the tab while permitting the tab to be switched from one position to another.

5. The combination of a printing device having a plurality of keepers, a switch tab having spaced stems entered in adjacent keepers, said stems having shoulders thereon to interlockingly engage the keepers when the stems are inserted therein and prevent removal of the tab while permitting the tab to be switched from one position to another, and means engaging the stems for holding the tab in switched position.

6. The combination of a printing device having a plurality of keepers, and a bifurcated switch tab having spaced stems entered in adjacent keepers, said stems having a limited movement in said keepers, and shoulders on the stems projecting angularly thereto to engage the keepers and prevent disengagement of the tab from the printing device while permitting a switching movement of the tab from one position to another.

7. The combination of a printing device frame having a plurality of keepers, and a switch tab having two stems entered in a

pair of adjacent keepers and straddling that portion of the printing device between said keepers, said stems being arcuately movable in said keepers, and means on the tab to engage the keepers and prevent the tab from being detached from the frame.

8. The combination of a printing device frame having a plurality of keepers, and a switch tab having two stems movably entered in a pair of adjacent keepers and straddling that portion of the printing device between said keepers, the edges of the switch tab at the top of the stems being curved to engage the adjacent edges of the keepers in the switching movements of the tab.

9. The combination of a printing device frame having a plurality of keepers, a switch tab having two stems movably entered in a pair of adjacent keepers and straddling that portion of the printing device between said keepers, the edges of the switch tab at the top of the stems being curved to engage the adjacent edges of the keepers in the switching movements of the tab, and means on the frame engaging the stems for retaining the tab in adjusted position.

10. The combination of a printing device frame having a plurality of keepers, a switch tab having two stems movably entered in a pair of adjacent keepers and straddling that portion of the printing device between said keepers, the edges of the switch tab at the top of the stems being curved to engage the adjacent edges of the keepers in the switching movements of the tab, and spaced studs on the frame arranged in the path of movement of the stems when the tab is switched and adapted to engage the stems to hold the tab in either switched position.

11. The combination of a printing device frame having a plurality of keepers, a switch tab having two stems movably entered in a pair of adjacent keepers and straddling that portion of the printing device between said keepers, the edges of the switch tab at the top of the stems being curved to engage the adjacent edges of the keepers in the switching movements of the tab, means for retainign the tab in adjusted position, and means for locking the tab in the keepers against separation from the printing device.

VALENTINE J. MOHLER.