US010043436B2

(12) **United States Patent**
Wang et al.

(10) **Patent No.: US 10,043,436 B2**
(45) **Date of Patent: Aug. 7, 2018**

(54) **DISPLAY DEVICE**

(71) Applicant: **InnoLux Corporation**, Miao-Li County (TW)

(72) Inventors: **Li-Jin Wang**, Miao-Li County (TW); **Yao-Lien Hsieh**, Miao-Li County (TW); **Chan-Feng Chiu**, Miao-Li County (TW); **Chung-Yi Wang**, Miao-Li County (TW)

(73) Assignee: **INNOLUX CORPORATION**, Miao-Li County (TW)

(*) Notice: Subject to any disclaimer, the term of this patent is extended or adjusted under 35 U.S.C. 154(b) by 93 days.

(21) Appl. No.: **15/184,561**

(22) Filed: **Jun. 16, 2016**

(65) **Prior Publication Data**

US 2017/0076652 A1 Mar. 16, 2017

(30) **Foreign Application Priority Data**

Sep. 11, 2015 (CN) 2015 1 0577707

(51) **Int. Cl.**
G09G 3/20 (2006.01)

(52) **U.S. Cl.**
CPC ... ***G09G 3/2003*** (2013.01); *G09G 2300/0452* (2013.01); *G09G 2310/08* (2013.01); *G09G 2320/0242* (2013.01)

(58) **Field of Classification Search**
None
See application file for complete search history.

(56) **References Cited**

U.S. PATENT DOCUMENTS

2003/0067458 A1* 4/2003 Anzai G09G 3/3225 345/204
2012/0044275 A1* 2/2012 Kobayashi G09G 3/20 345/690

* cited by examiner

Primary Examiner — Joseph Haley
(74) *Attorney, Agent, or Firm* — McClure, Qualey & Rodack, LLP

(57) **ABSTRACT**

A display device including a first pixel, a second pixel, and a control unit is provided. The first and second pixels are coupled to a data line. The control unit generates a first original image signal and a second original image signal required by the first and second pixels in a frame time according to an analog image and generates a first output image signal and a second output image signal according to the difference between the first and second original image signals. In the frame time, the control unit sequentially provides the first and second output image signals to the first and second pixels via the data line.

8 Claims, 12 Drawing Sheets

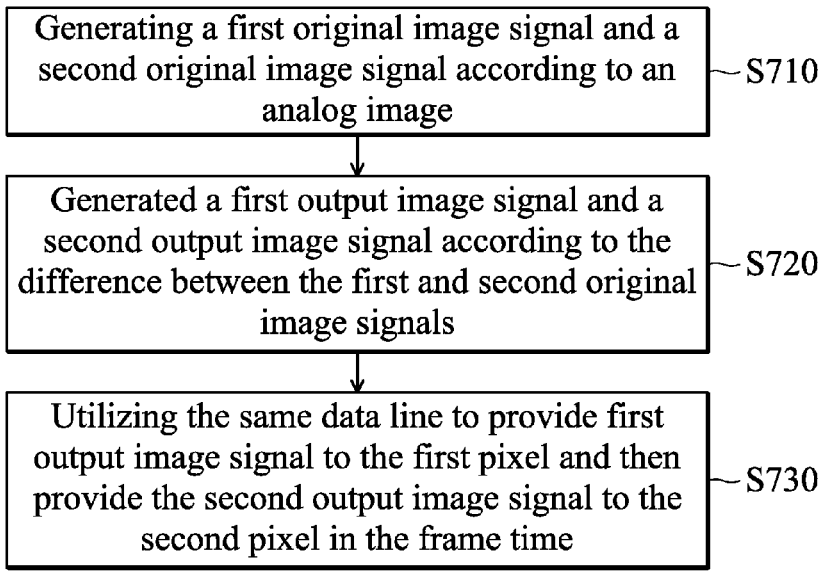

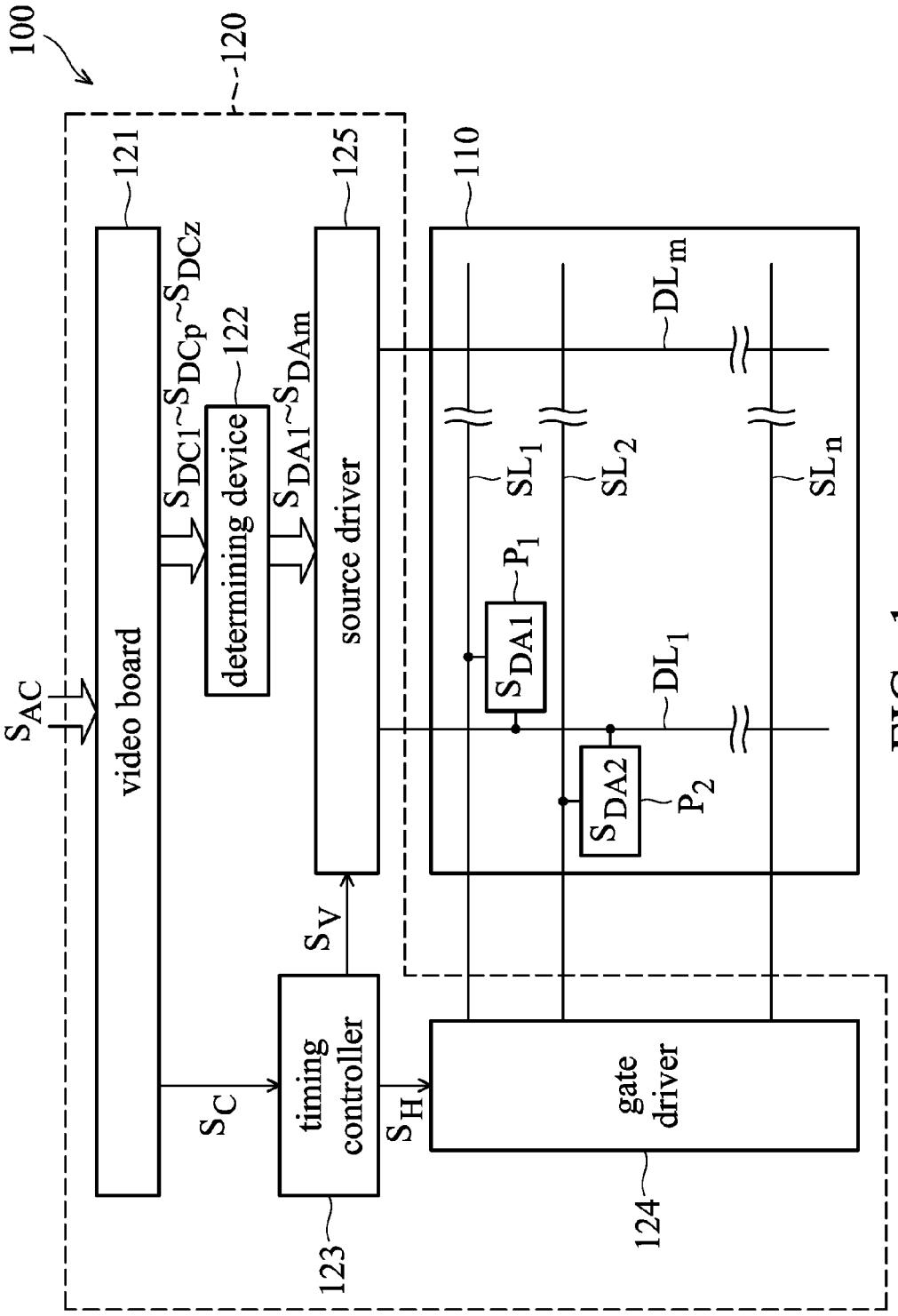
100
120
121
video board
S_{AC}
S_{DC1}~S_{DCp}~S_{DCz}
122
determining device
S_{DA1}~S_{DAm}
125
source driver
110
DL_m
SL_1
SL_2
SL_n
P_1
S_{DA1}
DL_1
S_{DA2}
P_2
S_V
timing controller
S_C
S_H
gate driver
123
124

FIG. 1

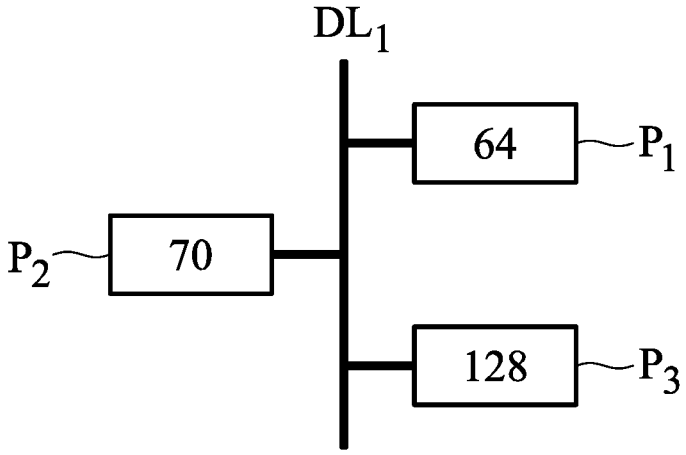

FIG. 2A

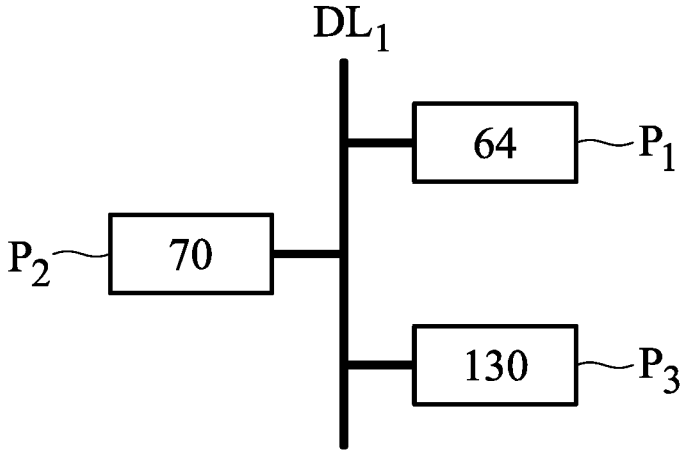

FIG. 2B

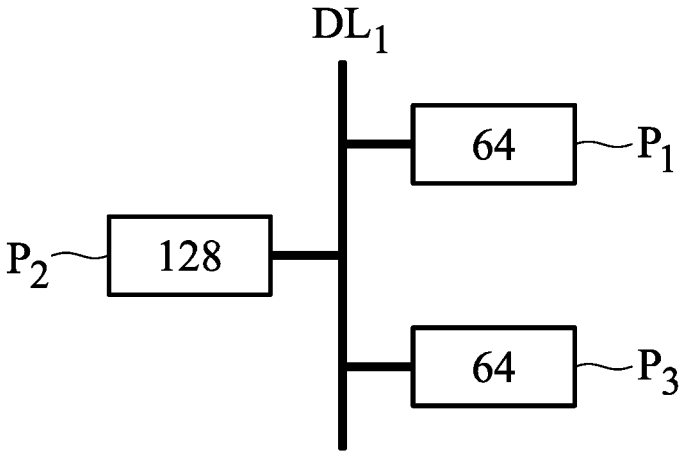

FIG. 3A

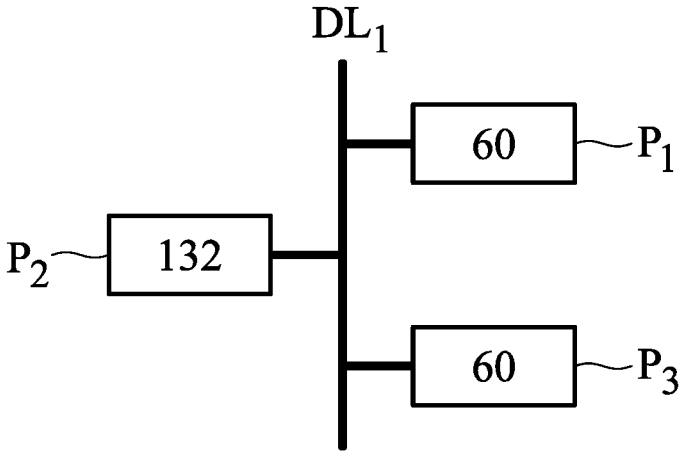

FIG. 3B

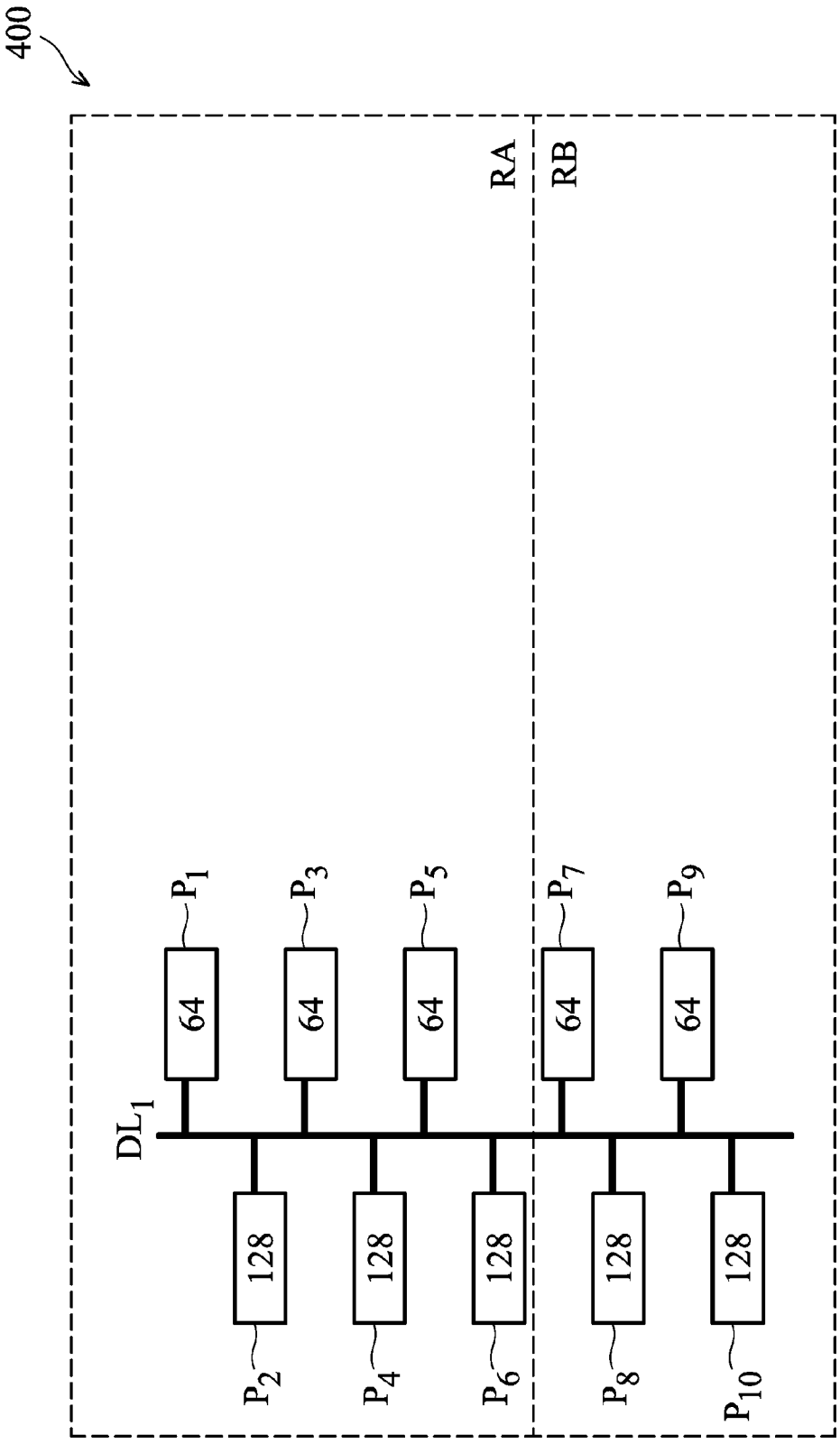
400
RA
RB
DL_1
P_1
P_3
P_5
P_7
P_9
64
64
64
64
64
128
128
128
128
128
P_2
P_4
P_6
P_8
P_{10}

FIG. 4A

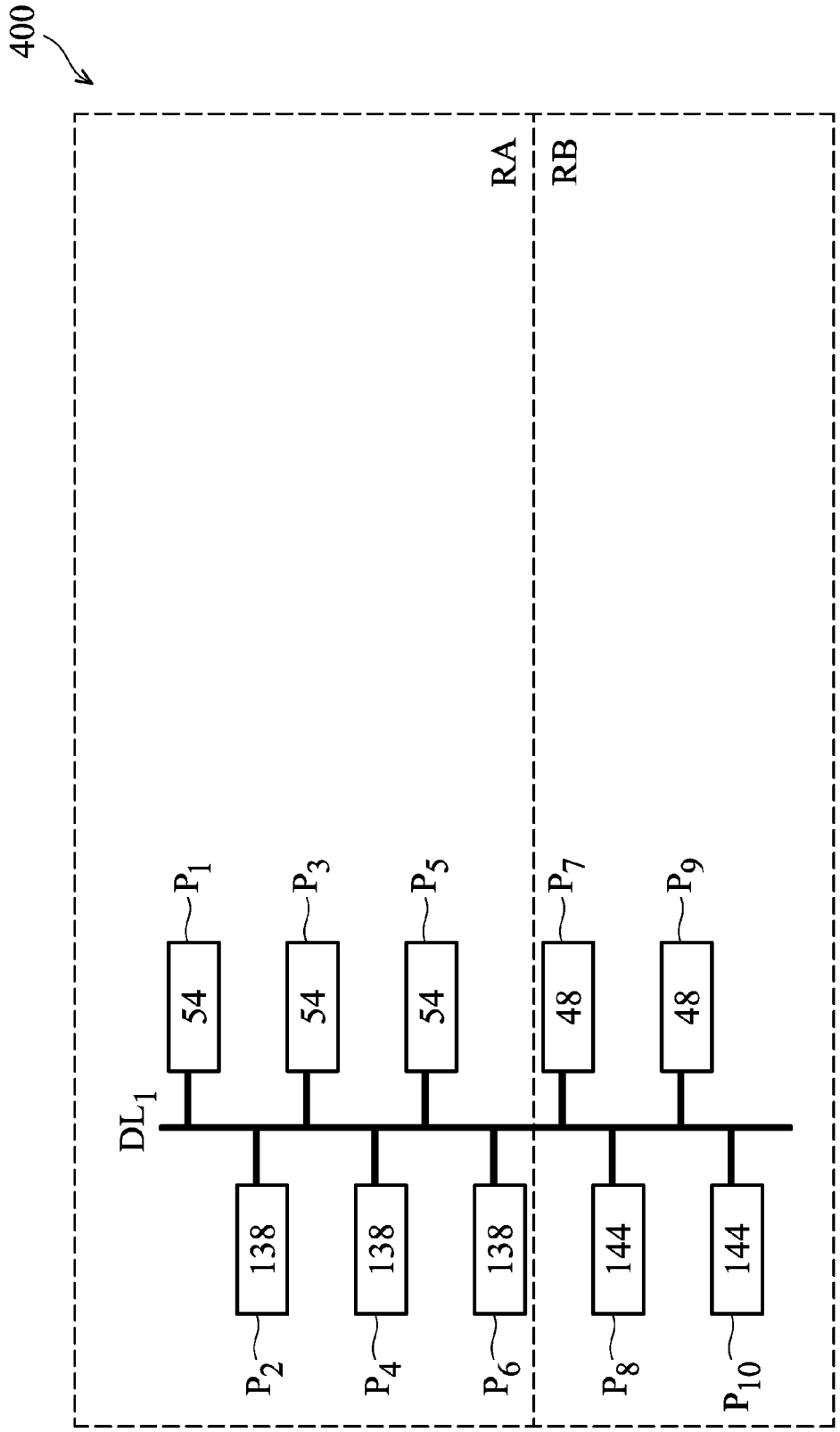
400
RA
RB
DL_1
P_1
P_3
P_5
P_7
P_9
54
54
54
48
48
138
138
138
144
144
P_2
P_4
P_6
P_8
P_{10}

FIG. 4B

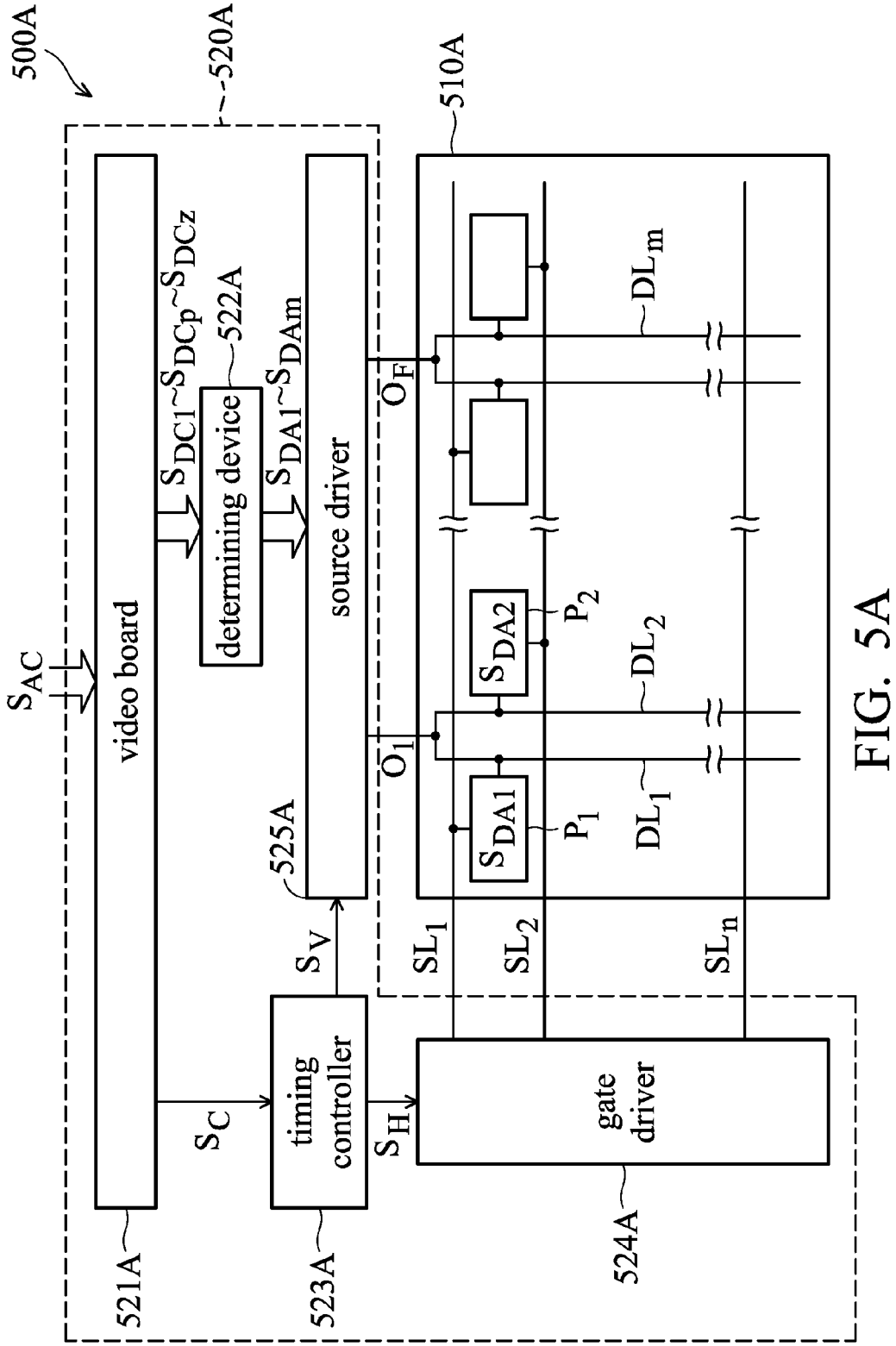
500A
520A
510A
video board
determining device
source driver
timing controller
gate driver
521A
522A
523A
524A
525A
S_{AC}
S_{DC1}~S_{DCp}~S_{DCz}
S_{DA1}~S_{DAm}
S_C
S_V
S_H
O_F
O_1
S_{DA1}
S_{DA2}
P_1
P_2
DL_1
DL_2
DL_m
SL_1
SL_2
SL_n

FIG. 5A

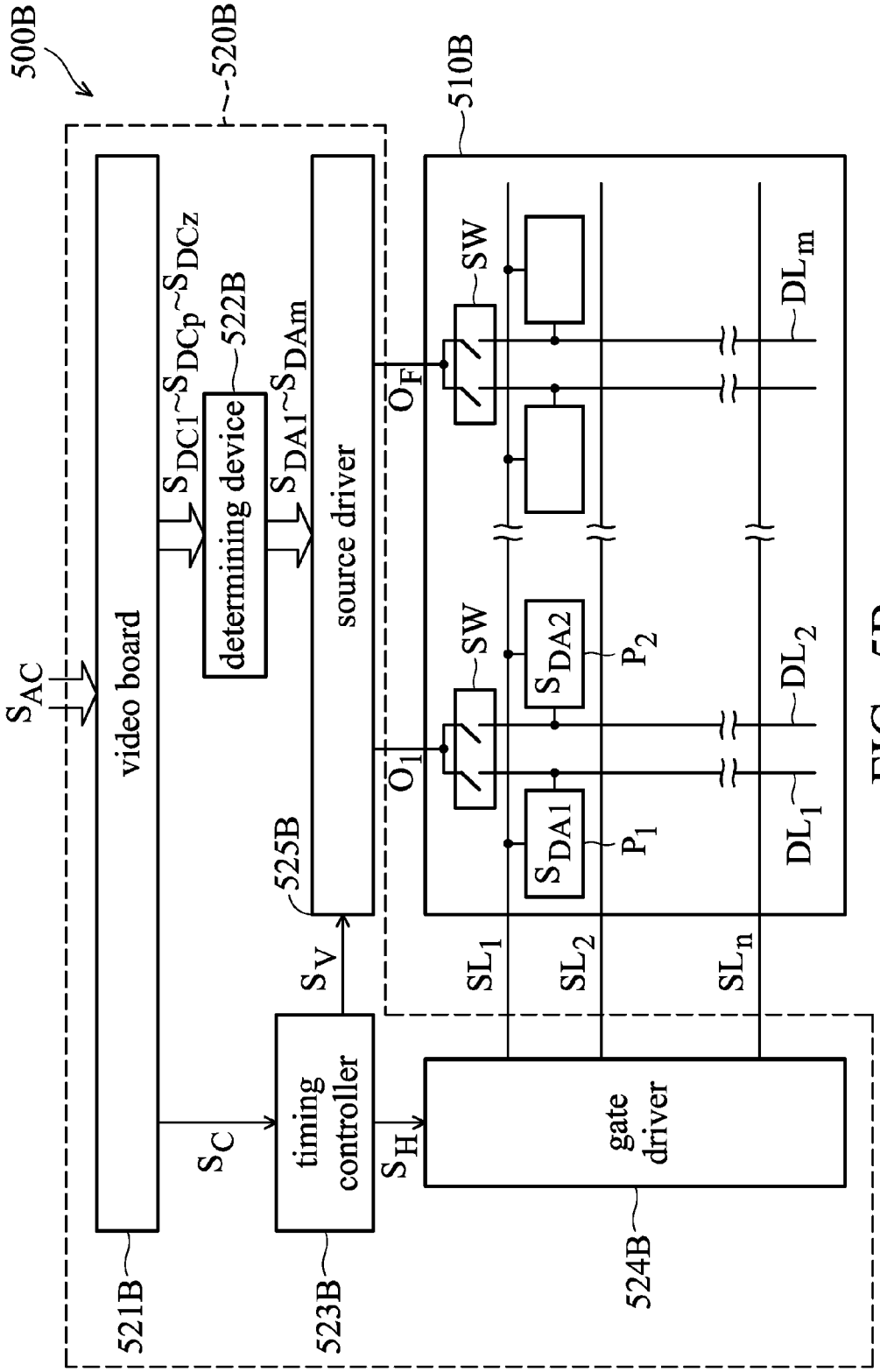
500B
520B
510B
S_{AC}
video board
S_{DC1}~S_{DCp}~S_{DCz}
522B
determining device
S_{DA1}~S_{DAm}
source driver
525B
O_F
O_1
SW
SW
S_{DA1}
S_{DA2}
P_1
P_2
DL_1
DL_2
DL_m
S_V
SL_1
SL_2
SL_n
S_C
timing controller
S_H
gate driver
521B
523B
524B

FIG. 5B

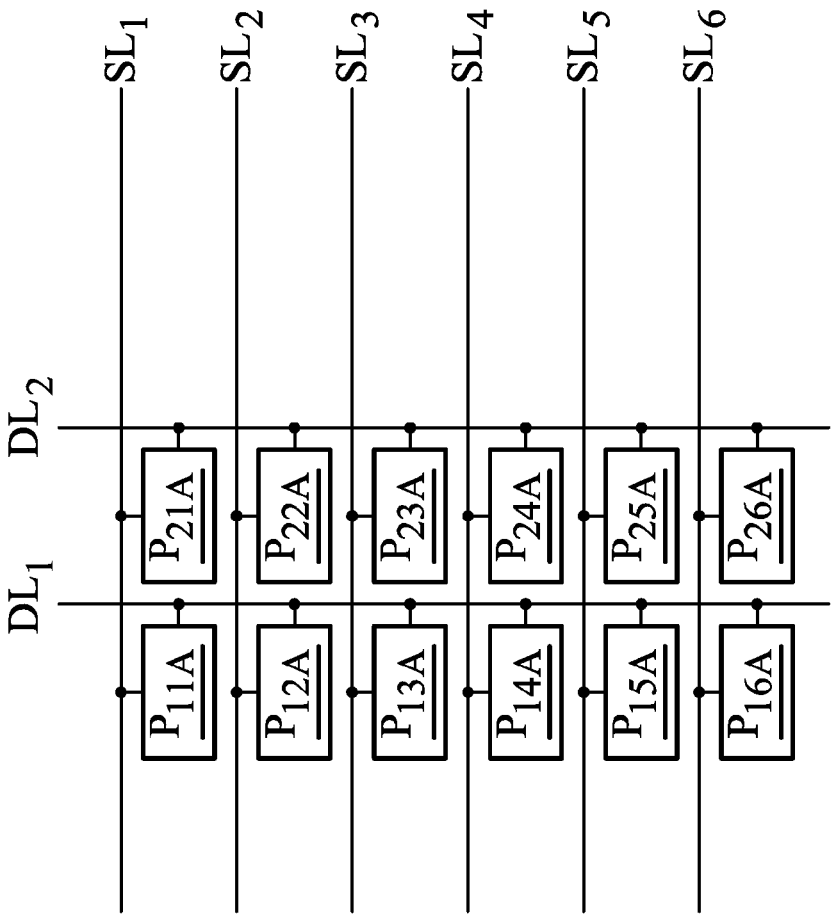
SL1
SL2
SL3
SL4
SL5
SL6
DL2
DL1
P21A
P22A
P23A
P24A
P25A
P26A
P11A
P12A
P13A
P14A
P15A
P16A

FIG. 6A

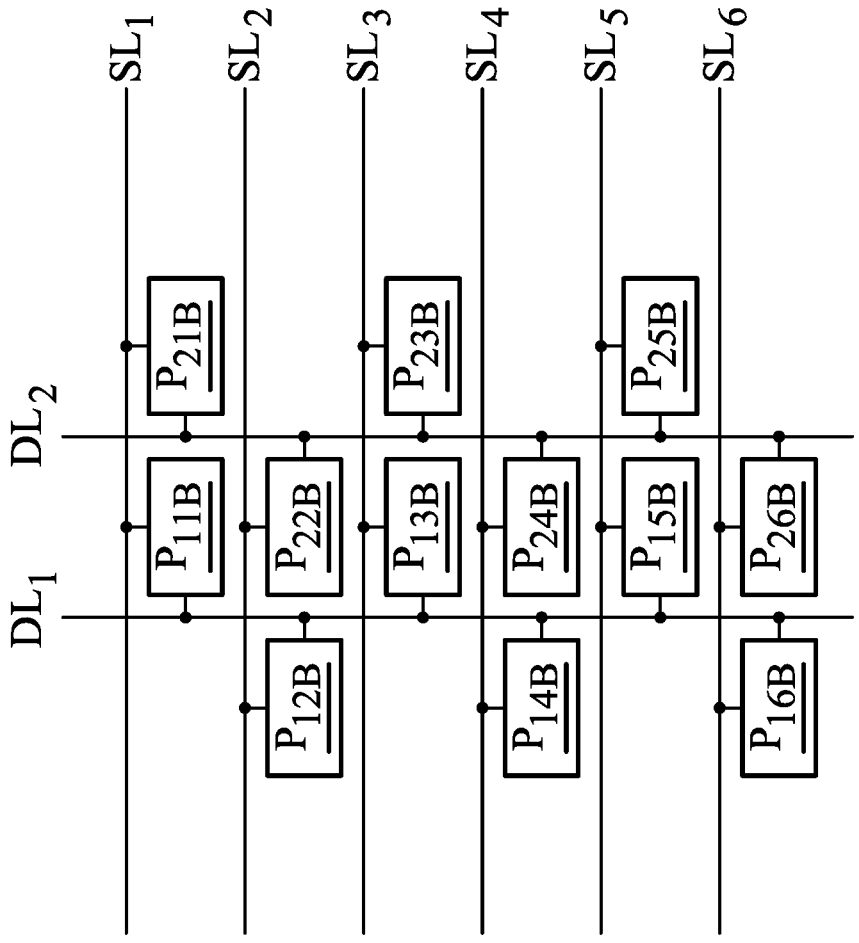
SL1
SL2
SL3
SL4
SL5
SL6
DL2
DL1
P21B
P11B
P12B
P22B
P23B
P13B
P14B
P24B
P25B
P15B
P16B
P26B

FIG. 6B

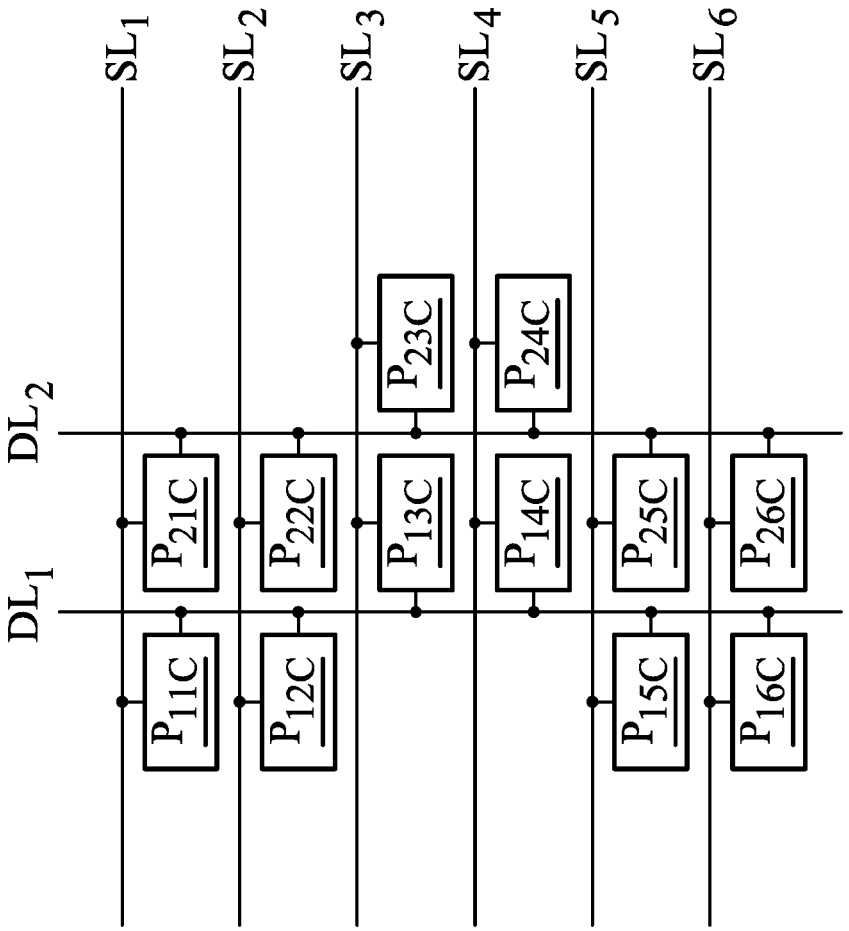
SL1
SL2
SL3
SL4
SL5
SL6
DL2
DL1
P11C
P12C
P13C
P14C
P15C
P16C
P21C
P22C
P23C
P24C
P25C
P26C

FIG. 6C

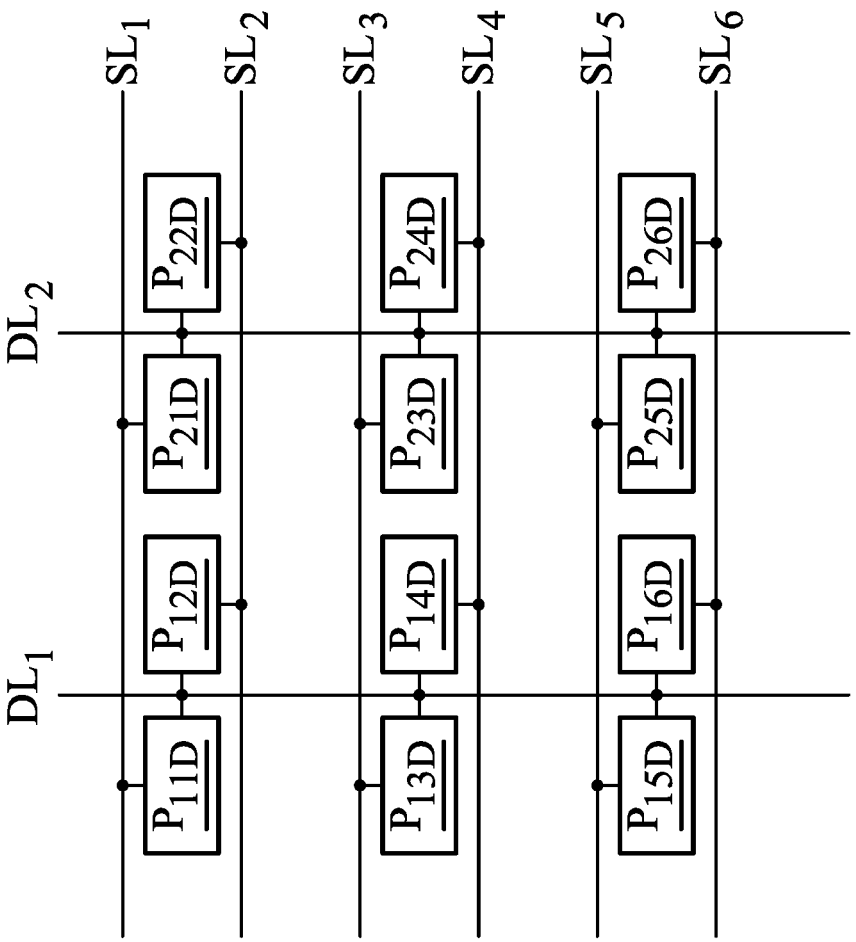
SL1
SL2
SL3
SL4
SL5
SL6
DL2
DL1
P22D
P21D
P12D
P11D
P24D
P23D
P14D
P13D
P26D
P25D
P16D
P15D

FIG. 6D

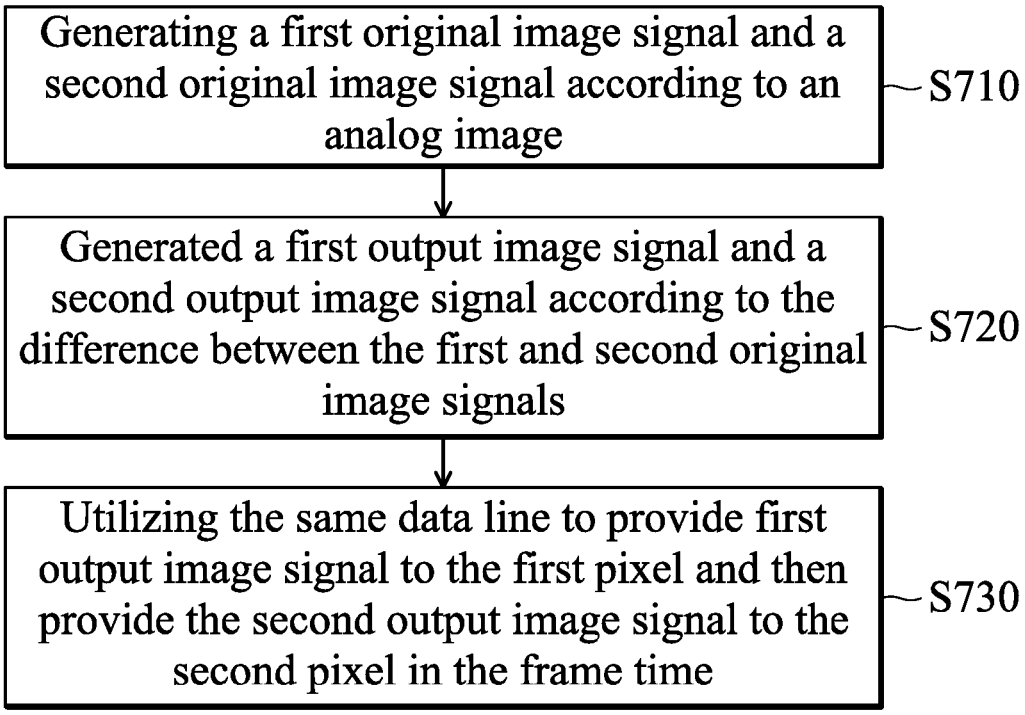
Generating a first original image signal and a second original image signal according to an analog image
S710
Generated a first output image signal and a second output image signal according to the difference between the first and second original image signals
S720
Utilizing the same data line to provide first output image signal to the first pixel and then provide the second output image signal to the second pixel in the frame time
S730

FIG. 7

DISPLAY DEVICE

CROSS REFERENCE TO RELATED APPLICATIONS

This Application claims priority of China Patent Application No. 201510577707.3, filed on Sep. 11, 2015, the entirety of which is incorporated by reference herein.

BACKGROUND OF THE INVENTION

Field of the Invention

The invention relates to an electronic device, and more particularly to a display device.

Description of the Related Art

Flat panel displays are widely used because they possess such favorable advantages as having a thin profile, light weigh, and low radiation. Generally, each display comprises various pixels. The color of each pixel can be controlled according to scan lines, which are horizontally extended, and data lines, which are vertically extended. However, the lengths of the data lines of the display increase as the size of the display increases. Therefore, the equivalent impedances of the data lines are increased. When one data line transmits the same data signals to different pixels, the different pixels may display different colors and cause low display quality .

BRIEF SUMMARY OF THE INVENTION

In accordance with an embodiment, a display device comprises a first pixel, a second pixel, and a control unit. The first and second pixels are coupled to a data line. The control unit generates a first original image signal and a second original image signal required by the first and second pixels in a frame time according to an analog image and generates a first output image signal and a second output image signal according to the difference between the first and second original image signals. In the frame time, the control unit sequentially provides the first and second output image signals to the first and second pixels via the data line.

A control method for a display panel device is provided. The display panel comprises a data line, a first pixel, and a second pixel. The first and second pixels are coupled to the data line. An exemplary embodiment of a control method for a display panel is described in the following. A first original image signal and a second original image signal required by the first and second pixels in a frame time are generated according to an analog image. A first output image signal and a second output image signal are generated according to the difference between the first and second original image signals. The first output image signal is first provided to the first pixel and then the second output image signal is provided to the second pixel via the data line in the frame time.

A detailed description is given in the following embodiments with reference to the accompanying drawings.

BRIEF DESCRIPTION OF THE DRAWINGS

The invention can be more fully understood by referring to the following detailed description and examples with references made to the accompanying drawings, wherein:

FIG. **1** is a schematic diagram of an exemplary embodiment of a display device, according to various aspects of the present disclosure;

FIGS. **2**A and **2**B show relationships between the original image signals and the output image signals, according to various aspects of the present disclosure;

FIGS. **3**A and **3**B show relationships between the original image signals and the output image signals, according to various aspects of the present disclosure;

FIGS. **4**A and **4**B show relationships between the original image signals and the output image signals, according to various aspects of the present disclosure;

FIGS. **5**A and **5**B are schematic diagrams of exemplary embodiments of the display device, according to various aspects of the present disclosure;

FIGS. **6**A~**6**D are arrangement schematic diagrams of exemplary embodiments of the pixels, according to various aspects of the present disclosure;

FIG. **7** is a flowchart schematic diagram of exemplary embodiments of a control method, according to various aspects of the present disclosure.

DETAILED DESCRIPTION OF THE INVENTION

The following description is of the best-contemplated mode of carrying out the invention. This description is made for the purpose of illustrating the general principles of the invention and should not be taken in a limiting sense. The scope of the invention is best determined by reference to the appended claims.

FIG. **1** is a schematic diagram of an exemplary embodiment of a display device, according to various aspects of the present disclosure. As shown in FIG. **1**, the display device **100** comprises a display panel **110** and a control unit **120**. In the present invention, the kind of display device **100** is not limited. In one embodiment, the display device **100** is a personal digital assistant (PDA), a cellular phone, a digital camera, a television, a global positioning system (GPS), a car display, an avionics display, a digital photo frame, a notebook computer (NB), or a personal computer (PC).

The display panel **110** comprises a plurality of scanlines SL_1~SL_n, a plurality of data lines DL_1~DL_m, and a plurality of pixels. Each pixel is coupled to a corresponding scan line and a corresponding data line, receives the data signal transmitting by the corresponding data line according to the scan signal transmitting by the corresponding scan line, and then displays a corresponding color according to the data signal. In a frame time, each scan line is activated one time so that each pixel receives the corresponding data signal. In the next frame time, each scan line is activated again and each pixel receives a new data signal. For brevity, FIG. **1** only shows the pixels P_1 and P_2, however, without limitation to the present invention.

In the present invention, the arrangement of the pixels is not limited. In this embodiment, the pixels P_1 and P_2 are coupled to the same data line DL_1 and coupled to different scan lines, such as SL_1 and SL_2, but the disclosure is not limited thereto. In other embodiments, the pixels P_1 and P_2 may be coupled to different data lines, or they may be coupled to the same scan line. In some embodiments, the scan line coupled to the first pixel is not the neighbor of the scan line coupled to the second pixel. In other words, at least one scan line is disposed between one scan line coupled to the first pixel and another scan line coupled to the second pixel.

In FIG. **1**, the pixel P_1 is disposed on the right side of the data line DL_1 and the pixel P_2 is disposed on the left side of the data line DL_1, but the disclosure is not limited thereto. In other embodiments, both of the pixels P_1 and P_2 may be

disposed on the right or left side of the data line DL_1. In addition, the present invention does not limit the colors displayed by the pixels P_1 and P_2. The color displayed by the pixel P_1 may be the same as or different from the color displayed by the pixel P_2.

The control unit **120** generates a plurality of original image signals S_{DC1}~S_{DCz} according to an analog image S_{AC}, wherein the original image signals S_{DC1}~S_{DCz} are the data signals required by all of the pixels of the display panel **110** in a frame time. In one embodiment, the original image signals S_{DC1}~S_{DCz}, are gray levels. To compensate for the delay effect caused by the equivalent impedances of the data lines, the control unit **120** adjusts the original image signals S_{DC1}~S_{DCz} to generate output image signals S_{DA1}~S_{DAm}.

For example, the control unit **120** generates the output image signals S_{DA1} and S_{DA2} according to the difference between the original image signals S_{DC1} and S_{DCp} among the original image signals S_{DC1}~S_{DCz}, wherein the original image signal S_{DC1} is a gray level for the pixel P_1 and the original image signal S_{DCp} is a gray level for the pixel P_2 in a frame time. Then, the control unit **120** sequentially provides the output image signal S_{DA1} to the pixel P_1 and the output image signal S_{DA2} to the pixel P_2 via the data line DL_1 in the frame time. In other words, the time when the pixel P_1 receives the output image signal S_{DA1} is earlier than the time when the pixel P_2 receives the output image signal S_{DA2}. In one embodiment, the output image signals S_{DA1} and S_{DA2} are gray levels.

The invention does not limit how the control unit **120** utilizes the difference between the original image signals S_{DC1} and S_{DCp} to generate the output image signals S_{DA1} and S_{DA2}. In one embodiment, when the difference between the original image signals S_{DC1} and S_{DCp} is higher than a pre-determined value, the control unit **120** adjusts at least one of the original image signals S_{DC1} and S_{DCp} to generate the output image signals S_{DA1} and S_{DA2}. In one embodiment, the control unit **120** only adjusts the original image signal S_{DC1} to generate an adjusted result, serves the adjusted result as the output image signal S_{DA1}, and serves the original image signal S_{DCp} as the output image signal S_{DA2}. In another embodiment, the control unit **120** adjusts the original image signals S_{DC1} and S_{DCp} and serves the adjusted results as the output image signals S_{DA1} and S_{DA2}.

However, when the difference between the original image signals S_{DC1} and S_{DCp} is not higher than the pre-determined value, the control unit **120** does not adjust the original image signals S_{DC1} and S_{DCp} and directly serves the original image signals S_{DC1} and S_{DCp} as the output image signals S_{DA1} and S_{DA2}. In other embodiments, the control unit **120** suitably adjusts at least one of the original image signals S_{DC1} and S_{DCp} according to the difference between the original image signals S_{DC1} and S_{DCp} and utilizes the same data line to sequentially output the adjusted results to the pixels P_1 and P_2.

FIGS. **2**A and **2**B show relationships between the original image signals and the output image signals, according to various aspects of the present disclosure. Refer to FIG. **2**A (shown the original image signals), assume that the original image signals required by the pixels P_1~P_3 are the gray levels **64**, **70**, and **128**, respectively. In one embodiment, the control unit **120** judges the difference between the gray levels for the pixels P_1 and P_2 first. Since the difference between the gray levels for the pixels P_1 and P_2 is not large, the control unit **120** does not adjust the gray levels for the pixels P_1 and P_2 and provides the output image signals as the same as the original image signals. Therefore, the gray levels actually received by the pixels P_1 and P_2 are **64** and **70** (as shown as the FIG. **2**B).

However, the difference between the gray levels for the pixels P_2 and P_3 is large such that the control unit **120** adjusts the gray level for the pixel P_3. In this case, the gray level for each pixel (e.g. P_3) is changed according to the gray level for the previous pixel (e.g. P_2), but the disclosure is not limited. In other embodiments, the gray level for eachpixel (e.g. P_2) is also changed according to the gray level for the next pixel (e.g. P_3).

For example, refer to FIG. **3**A (shows the original image signals), assume that the original image signals for the pixels P_1~P_3 are the gray levels **64**, **128**, and **64**, respectively. The gray level **64** for the pixel P_1 is less than the gray level **128** for the pixel P_2. Therefore, the control unit **120** increases the gray level for the pixel P_2 from **128** to **132**. As shown in FIG. **3**B (shows the output image signals), the output image signal actually received by the pixel P_2 is the gray level **132**. Furthermore, since the original gray level of the pixel P_2 is **128** higher than the original gray levels (**64**) of the pixels P_1 and P_3, the control unit **120** decreases the gray levels for the pixels P_1 and P_3 from **64** to **60**. As shown in FIG. **3**B, the output image signals actually received by the pixels P_1 and P_3 are the gray level **60**.

In the present invention, the adjusted range of the gray level is not limited. In this embodiment, the difference of the original gray levels between the pixels P_1 and P_2 is the same as the difference of the original gray levels between the pixels P_2 and P_3. Therefore, the adjusted range of the gray level for the pixel P_2 is the same as the adjusted range of the gray level for the pixel P_3, however, without limitation to the present invention. In some embodiments, the adjusted range of the gray level relates to the position of the pixel on a display panel. FIGS. **4**A and **4**B show the adjusted ranges of the gray levels, according to various aspects of the present disclosure. As shown in FIGS. **4**A (shows the original image signals) and **4**B (shows the output image signals), the display panel **400** is divided into regions RA and RB, but the disclosure is not limited thereto. In some embodiments, the display panel **400** is divided into three or more regions. In this embodiment, the region RA is near to an external control unit and the region RB is far from the external control unit.

Assume that the original gray levels for the pixels P_1, P_3, P_5, P_7, and P_9 are **64**, and the original gray levels for the pixels P_2, P_4, P_6, P_8, and P_{10} are **128**. The difference of the original gray levels between the pixels P_1 and P_2 is higher than a pre-determined value (e.g. **8** or **24**), the output gray level for the pixel P_2 is increased from **128** to **138**. Refer to FIG. **4**B, the output image signal actually received by the pixel P_2 is the gray level **138**. The adjustment methods for the pixels P_4 and P_6 are the same as the adjustment method for the pixels P_2, so the description of the adjustment methods for the pixels P_4 and P_6 are omitted.

Refer to FIG. **4**A, the original gray level (**64**) for the pixel P_3 is lower than the original gray levels (**128**) for the pixel P_2, the output gray level for the pixels P_3 are decreased from **64** to **54**, as shown in FIG. **4**B. The adjustment method for the pixel P_5 is the same as the adjustment method for the pixels P_3, the description of the adjustment method for the pixel P_5 is omitted.

Then, refer to FIG. **4**A, assume that the pixels P_1~P_6 in the region RA belong to a first group, and the pixels P_7~$_{10}$ in the region RB belong to a second group. The first group is near to the external control unit and the second group is far from the external control unit. The original gray level for the pixel P_1 is the same as the original gray level for the pixel P_7. The

original gray level for the pixel P_2 is the same as the original gray level for the pixel P_8. In other words, the difference of the original gray levels between the pixels P_1 and P_2 is the same as the difference of the original gray levels between the pixels P_7 and P_8, but the output gray level for the pixel P_7 is decreased from **64** to **48**. The output gray level for the pixel P_7 is different from the output gray level for the pixel P_1. Moreover, the output gray level for the pixel P_8 is increased from **128** to **144** and is different from the output gray level for the pixel P_2. As shown in FIG. **4**B, the output image signal actually received by the pixel P_7 is the gray **48**, and the output image signal actually received by the pixel P_8 is the gray **144**. In some embodiments, the adjusted range of the gray level for one pixel is increased as the distance between the one pixel and the control unit increases.

In some embodiments, the pixels P_1~P_8 sequentially receive the data signals. Assume that the pixels P_1, P_2, P_7, and P_8 are referred to as a first pixel, a second pixel, a third pixel and a fourth pixel. As shown in FIG. **4**A, the original gray level (**128**) for the second pixel (P_2) is the same as the original gray level (**128**) for the fourth pixel (P_8), and the difference between the original gray levels for the first pixel (P_1) and the second pixel (P_2) is the same as the difference between the original gray levels for the third pixel (P_7) and the fourth pixel (P_8). In this case, the output image signal, which is the gray level **138** and actually received by the second pixel (P_2), is different from the output image signal, which is the gray level **144** and actually received by the fourth pixel (P_8). In another embodiment, the first pixel (P_1) and the third pixel (P_7) have the same original gray level (e.g. **64**), and the difference between the original gray levels for the second pixel (P_2) and the first pixel (P_1) is the same as the difference between the original gray levels for the fourth pixel (P_8) and the third pixel (P_8). Therefore, the gray level (**54**) of the output image signal actually received by the first pixel (P_1) is different from the gray level (**48**) of the output image signal actually received by the third pixel (P_7). In some embodiments, when the first pixel (P_1) and the third pixel (P_7) have the same original gray level (e.g. **64**) and the second pixel (P_2) and the fourth pixel (P_8) have the same original gray level (e.g. **128**), the gray level (**138**) of the output image signal actually received by the second pixel (P_2) is different from the gray level (**144**) of the output image signal actually received by the fourth pixel (P_8).

The invention does not limit how the control unit **120** utilizes the difference between the original gray levels for two pixels to adjust the original gray levels. In one embodiment, the control unit **120** stores a look-up table describing the relationships between the differences of the gray levels and the adjustment ranges of the gray levels. The control unit **120** finds the corresponding adjustment range from the look-up table according to the difference between the original gray levels for the pixels. The control unit **120** adjusts the corresponding original gray levels for the pixels according to the adjustment range with the look-up table and then provides the new gray level to the corresponding pixel. Since the image signal received by each pixel relates to the image signal received by the previous pixel, the distortion effect of the image signal can be improved.

Refer to FIG. **1**, the invention does not limit the internal structure of the control unit **120**. In one embodiment, the control unit **120** comprises a video board **121**, a determining device **122**, a timing controller (TCON) **123**, a gate driver **124** and a source driver **125**. The video board **121** is configured to transform the analog image S_{AC} to original image signals S_{DC1}~S_{DCz} and generate a control signal S_C. The invention does not limit the internal structure of the video board **121**. Any circuit structure can serve as the video board **121**, as long as the circuit structure is capable of transforming an analog image to a digital image.

The determining device **122** generates the output image signals S_{DA1}~S_{DAm} according to the original image signals S_{DC1}~S_{DCz}. For example, the determining device **122** adjusts at least one of the original image signals S_{DC1} and S_{DCp} according to the signal difference between the original image signals S_{DC1} and S_{DCp}. In one embodiment, the determining device **122** only adjusts the original image signal S_{DC1} or S_{DC2} to generate an adjusted result and serves the adjusted result as the output image signal S_{DA1} or S_{DA2}. In this case, the determining device **122** directly serves the original image signal S_{DC2} or S_{DC1} as the output image signal S_{DA2} or S_{DA1}. In other embodiments, the determining device **122** adjusts the original image signals S_{DC1} and S_{DCp}. In one embodiment, the determining device **122** is integrated into the video board **121**.

The timing controller **123** generates a horizontal synchronization signal S_H and a vertical synchronization signal S_V. The gate driver **124** asserts the scan lines SL_1~SL_n according to the horizontal synchronization signal S_H. The source driver **125** outputs the output image signal S_{DA1} to the pixel P_1 and outputs the output image signal S_{DA2} to the pixel P_2 according to the vertical synchronization signal S_V. In one embodiment, the determining device **122** is integrated into the source driver.

FIGS. **5**A and **5**B are schematic diagrams of other exemplary embodiments of the display device, according to various aspects of the present disclosure. FIG. **5**A is similar to FIG. **1** with the exception that the output terminal of the source driver **525**A is coupled to two data lines. For example, the output terminal O_1 is coupled to the data lines DL_1 and DL_2. In this case, the pixel P_1 is coupled to the data line DL_1, and the pixel P_2 is coupled to the data line DL_2. Additionally, the pixel P_1 is coupled to the scan line SL_1, and the pixel P_2 is coupled to the scan line SL_2.

In FIG. **5**B, the output terminal of the source driver **525**B is also coupled to two data lines. However, in FIG. **5**B, the pixels P_1 and P_2 are coupled to the same scan line, such as SL_1. In this case, the display panel **510**B comprises a plurality of switches SW to transmit output image signals to the specific data lines. The switches SW may be controlled by an external device (not shown).

FIGS. **6**A~**6**D are schematic diagrams of other exemplary embodiments of the arrangement of the pixels, according to various aspects of the present disclosure. For brevity, FIGS. **6**A~**6**D only show twelve pixels, but the disclosure is not limited thereto. In FIG. **6**A, the pixels P_{11A}~P_{16A} are coupled to the data line DL_1 and coupled to different scan lines. Similarly, the pixels P_{21A}~P_{26A} are coupled to the data line DL_2 and coupled to different scan lines. Additionally, the pixels P_{11A}~P_{16A} are disposed on the left side of the data line DL_1, and the pixels P_{21A}~P_{26A} are disposed on the left side of the data line DL_2. In this embodiment, the pixels P_{11A} and P_{21A} are coupled to the same scan line, such as SL_1. The pixels P_{12A} and P_{22A} are coupled to another scan line, such as SL_2.

In FIG. **6**B, the pixels P_{11B}~P_{16B} are coupled to the data line DL_1 and coupled to difference scan lines. Similarly, the pixels P_{21B}~P_{26B} are coupled to the data line DL_2 and coupled to difference scan lines. In this embodiment, the pixels P_{11B}, P_{13B}, and P_{15B} are disposed on the right side of the data line DL_1, and the pixels P_{12B}, P_{14B}, and P_{16B} are disposed on the left side of the data line DL_1. Furthermore, the pixels P_{21B}, P_{23B}, and P_{25B} are disposed on the right side of the data line DL_2, and the pixels P_{22B}, P_{24B}, and P_{26B} are

disposed on the left side of the data line DL_2. As shown in FIG. **6**B, the pixels P_{11B} and P_{21B} are coupled to the same scan line, such as SL_1, and the pixels P_{12B} and P_{22B} are coupled to another scan line, such as SL_2.

In FIG. **6**B, the pixels P_{11C}~P_{16C} are coupled to the data line DL_1 and coupled to different scan lines. Similarly, the pixels P_{21C}~P_{26C} are coupled to the data line DL_2 and coupled to different scan lines. The pixels P_{11C}, P_{12C}, P_{15C} and P_{16C} are disposed on the left side of the data line DL_1. The pixels P_{13C} and P_{14C} are disposed on the right side of the data line DL_1. In addition, the pixels P_{21C}, P_{22C}, P_{25C} and P_{26C} are disposed on the left side of the data line DL_2. The pixels P_{23C} and P_{24C} are disposed on the right side of the data line DL_2. The pixels P_{11C} and P_{21C} are coupled to the same scan line, such as SL_1. The pixels P_{12C} and P_{22C} are coupled to another scan line, such as SL_2.

In FIG. **6**D, the pixels P_{11D}~P_{16D} are coupled to the data line DL_1 and coupled to different scan lines. Similarly, the pixels P_{21D}~P_{26D} are coupled to the data line DL_2 and coupled to different scan lines. The pixels P_{11D}, P_{13D} and P_{15D} are disposed on the left side of the data line DL_1. The pixels P_{12D}, P_{14D} and P_{16D} are disposed on the right side of the data line DL_1. Similarly, the pixels P_{21D}, P_{23D} and P_{25D} are disposed on the left side of the data line DL_2. The pixels P_{22D}, P_{24D} and P_{26D} are disposed on the right side of the data line DL_2. The pixels P_{11D} and P_{21D} are coupled to the same scan line, such as SL_1. The pixels P_{12D} and P_{22D} are coupled to another scan line, such as SL_2. Additionally, the pixels P_{11D}, P_{12D}, P_{21D} and P_{22D} are disposed between the scan lines SL_1 and SL_2.

In the same frame time, the gray level of each pixel relates to the gray level of the previous pixel. Therefore, the color shift effect and the bright-dark streak effect caused by data distortion caused by the long data lines can be compensated for, to improve the quality of the display panel. In one embodiment, even if the original image signal for a column of the pixels arranged along vertical direction is set to a fixed value, such as the gray level **64**, the gray level actually received by the column of the pixels is different from the original image signal.

Taking FIG. **6**B as an example, assume that the original gray levels for the pixels P_{11B}, P_{13B}, and P_{15B} are **64**, and the original gray levels for the pixels P_{12B}, P_{14B}, and P_{16B} are **128**. Since the original gray levels of the pixels P_{12B}, P_{14B}, and P_{16B} are higher than the original gray levels of the pixels P_{11B}, P_{13B}, and P_{15B}, the original gray levels of the pixels P_{11B}, P_{13B}, and P_{15B} are decreased, such as from **64** to **54**. The decreased gray levels are provided to the pixels P_{11B}, P_{13B}, and P_{15B}.

FIG. **7** is a flowchart schematic diagram of an exemplary embodiment of a control method, according to various aspects of the present disclosure. The control method is applied to a display panel. The display panel comprises a data line, a first pixel, and a second pixel. In one embodiment, the first and second pixels are coupled to the same data line. The invention does not limit the arrangement of the first and second pixels. In one embodiment, the connection between the first and second pixels and the data line are shown in FIGS. **1**, **5**A~**5**B, and **6**A~**6**D. In other embodiments, the display panel further comprises a plurality of scan lines extended along a horizontal direction.

First, a first original image signal and a second original image signal are generated according to an analog image (step S**710**). In this embodiment, the first and second original image signals are the data signals for the first and second pixels in a frame time. In one embodiment, the first and second original image signals are gray levels. In the frame time, each scan line in the display panel is asserted one time.

A first output image signal and a second output image signal are generated according to the difference between the first and second original image signals (step S**720**). The invention does not limit how step S**720** generates two output image signals according to the difference between two original image signals. In one embodiment, when the first original image signal is higher than the second original image signal, to subtract a first value from the second original image signal to generate the second output image signal. However, when the first original image signal is less than the second original image signal, to add a second value to the second original image signal to generate the second output image signal.

The invention does not limit the first and second values. In one embodiment, when the differences between the first pixel and the second pixel in the two situations are different, the first and second values are different, too. In other embodiments, the first value is equal to the second value. In another embodiment, when the two differences are within the same pre-determined range, such as gray levels **50**~**80**, the first value is equal to the second value.

In other embodiments, when the difference between the first and second original image signals is higher than a pre-determined value, the first and second original image signals are adjusted and the adjusted results are served as the first and second output image signals. However, when the difference between the first and second original image signals is not higher than the pre-determined value, the first and second original image signals do not be adjusted and the first and second original image signals are served as the first and second output image signals.

In the frame time, the same data line is utilized to output the first output image signal to the first pixel and then output the second output image signal to the second pixel (step S**730**). In one embodiment, the first pixel displays a first color according to the first output image signal. The second pixel displays a second color according to the second output image signal. The first color may be the same as or different from the second color. In another embodiment, the time when the first pixel receives the first output image signal is earlier than the time when the second pixel receives the second output image signal.

In some embodiments, step S**720** further generates a third output image signal and a fourth output image signal according to the difference between a third original image signal and a fourth original image signal. In this case, step S**730** utilizes the same data line to provide the third output image signal to a third pixel and then provides the fourth output image signal to a fourth pixel in the frame time. In this embodiment, the first to fourth pixels are coupled to the same data line. In one embodiment, step S**730** sequentially provides the first and second output image signals to the first and second pixels in a first period of the frame time and provides the third and fourth output image signals to the third and fourth pixels in a second period of the frame time. In this embodiment, the first period is before the second period.

Since the generation method for the third and fourth output image signals is the same as the generation method for the first and second output image signals, the description of the generation method for the third and fourth output image signals is omitted. In one embodiment, even if the difference between the third and fourth original image signals is the same as the difference between the first and second original image signals, the adjustment range for the

third and fourth output image signals is different from the adjustment range for the first and second output image signals.

For example, if the distance between the third and fourth pixels and an external control unit configured to provide output image signals is longer than the distance between the first and second pixels and the external control unit, the adjustment range for the third and fourth original image signals for the third and fourth pixels is larger than the adjustment range for the first and second original image signals for the first and second pixels. In one embodiment, the second original image signal is equal to the fourth original image signal. Since the image signal received by each pixel relates to the image signal received by the previous pixel, the color shift effect and the bright-dark streak effect caused by the equivalent impedances of the data lines.

Unless otherwise defined, all terms (including technical and scientific terms) used herein have the same meaning as commonly understood by one of ordinary skill in the art to which this invention belongs. It should be understood that terms such as those defined in commonly used dictionaries should be interpreted as having a meaning that is consistent with their meaning in the context of the relevant art and will not be interpreted in an idealized or overly formal sense unless expressly so defined herein.

While the invention has been described by way of example and in terms of the preferred embodiments, it is to be understood that the invention is not limited to the disclosed embodiments. On the contrary, it is intended to cover various modifications and similar arrangements (as would be apparent to those skilled in the art). Therefore, the scope of the appended claims should be accorded the broadest interpretation so as to encompass all such modifications and similar arrangements.

What is claimed is:

1. A display device, comprising:

a first pixel;

a second pixel, wherein the first and second pixels are coupled to a data line; and

a control unit generating a first original image signal and a second original image signal required by the first and second pixels in a frame time according to an analog image and generating a first output image signal and a second output image signal according to a difference between the first and second original image signals,

wherein in the frame time, the control unit sequentially provides the first and second output image signals to the first and second pixels via the data line,

wherein the control unit comprises:

a video board comprising a first input receiving an analog image and a first output outputting the first and second original image signals;

a determining device comprising a second input receiving the first and second original image signals and a second output outputting the first and second output image signals;

a timing controller generating a horizontal synchronization signal and a vertical synchronization signal;

a gate driver generating a plurality of scan signals according to the horizontal synchronization signal; and

a source driver outputting the first and second output image signals according to the vertical synchronization signal,

wherein when the difference between the first and second original image signals is higher than a pre-determined value, the control unit adjusts the first or second original image signal and generates the first and second output image signals, and when the difference between the first and second original image signals is not higher than the pre-determined value, the control unit does not adjust the first and second original image signals, and the first and second original image signals are the same as the first and second output image signal respectively.

2. The display device as claimed in claim **1**, wherein the control unit outputs the first output image signal to the first pixel and then outputs the second output image signal to the second pixel.

3. The display device as claimed in claim **1**, wherein the first pixel is disposed on a first side of the data line, the second pixel is disposed on a second side of the data line, and the first side is opposite to the second side.

4. The display device as claimed in claim **3**, wherein the display device further comprises a plurality of pixels, the data line is coupled to a first group of the pixels and a second group of pixels, the first group is disposed on the first side, and the second group is disposed on the second side.

5. The display device as claimed in claim **1**, wherein the first pixel is disposed on a first side of the data line, the second pixel is disposed on a second side of the data line, and the first side is opposite to the second side, wherein the first pixel is coupled to a first scan line, the second pixel is coupled to a second scan line which is neighboring the first scan line, and the first and second pixels are disposed between the first and second scan lines.

6. The display device as claimed in claim **1**, wherein the control unit generates a third output image signal and a fourth output image signal according to a difference between a third original image signal and a fourth original image signal, and the control unit sequentially outputs the third output image signal to a third pixel and outputs the fourth output image signal to a fourth pixel via the data line,

wherein when the third original image signal is the same as the first original image signal and the fourth original image signal is the same as the second original image signal, the fourth output image signal is different from the second output image signal.

7. A control method applied in a display panel comprising a data line, a first pixel, and a second pixel, wherein the first and second pixels are coupled to the data line, comprising:

generating a first original image signal and a second original image signal required by the first and second pixels in a frame time according to an analog image;

generating a first output image signal and a second output image signal according to a difference between the first and second original image signals; and

sequentially providing the first output image signal to the first pixel and providing the second output image signal to the second pixel via the data line in the frame time,

wherein the step of generating the first and second output image signals according to the difference between the first and second original image signals comprises:

judging the difference between the first and second original image signals, wherein when the difference between the first and second original image signals is higher than a pre-determined value, the first or second original image signal is adjusted to generate the first and second output image signals, and when the difference between the first and second original image signals is not higher than the pre-determined value, the first and second original image signals are the same as the first and second output image signals.

8. The control method as claimed in claim **7**, further comprising:

generating a third output image signal and a fourth output image signal according to a difference between a third original image signal and a fourth original image signal; and

sequentially outputting the third output image signal to a third pixel and outputting the fourth output image signal to a fourth pixel via the data line in the frame time,

wherein the data line sequentially provides the first output image signal to the first pixel, provides the second output image signal to the second pixel, provides the third output image signal to the third pixel, and then provides the fourth output image signal to the fourth pixel, and

wherein when the third original image signal is the same as the first original image signal and the fourth original image signal is the same as the second original image signal, the fourth output image signal is different from the second output image signal.

* * * * *