PFOR-3331

P5 CORPORATE

SPRUSON&FERGUSON

Australia

Patents Act 1990

NOTICE OF ENTITLEMENT

I, Melanie D. Riehle ,

of Hill-Rom Company, Inc. of Highway 46, Batesville, Indiana 47006, United States of America

being authorised by the Applicant(s)/Nominated Person(s) in respect of an application entitled:

FOOT SECTION FOR BIRTHING BED

state the following:-

1. The Applicant(s)/Nominated Person(s) has/have, for the following reasons, gained entitlement from the actual inventor(s):-

the applicant is the assignee of the invention from the actual inventors

2a.* ~~The Applicant(s)/Nominated Person(s) is/are the applicant(s) of the of the basic application(s) listed* on the Patent Request/ *in the Declaration under Article 8 of the PCT.~~

2b.* The Applicant(s)/Nominated Person(s) is/are entitled to rely on the basic application(s) listed* ~~on the Patent Request/~~ *in the Declaration under Article 8 of the PCT as follows:

The Applicant/Nominated Person is the assignee of the basic applicants.

3.* The basic application(s) listed ~~*on the Patent Request/~~ *in the Declaration under Article 8 of the PCT is/are the application(s) first made in a Convention Country in respect of the invention.

4a.* ~~The Applicant(s)/Nominated Person(s) is/are the depositor(s) of the deposit(s) listed in the Schedule hereto.~~

4b.* ~~The Applicant(s)/Nominated Person(s) has/have the consent of _____, of~~

,

~~the depositor(s) of the deposit(s) listed in the Schedule hereto, to rely on that/those deposit(s).~~

DATED this 20th day of September 19 93

Melanie D. Riehle
(Signature)

Melanie D. Riehle, Assistant Secretary
(Name & Title)

* Delete if not applicable.

AU9217985

(12) PATENT ABRIDGMENT (11) Document No. AU-B-17985/92
(19) AUSTRALIAN PATENT OFFICE (10) Acceptance No. 664550

(54) Title
FOOT SECTION FOR BIRTHING BED

International Patent Classification(s)
(51)[5] **A61G 007/075**

(21) Application No. : **17985/92** (22) Application Date : **15.04.92**

(87) PCT Publication Number : **WO92/18082**

(30) Priority Data

(31) Number	(32) Date	(33) Country
685188	15.04.91	US UNITED STATES OF AMERICA

(43) Publication Date : **17.11.92**

(44) Publication Date of Accepted Application : **23.11.95**

(71) Applicant(s)
HILL-ROM COMPANY, INC.

(72) Inventor(s)
RICHARD L. BORDERS; ROBERT T FUSSNER; MICHAEL W HAMILTON

(74) Attorney or Agent
SPRUSON & FERGUSON , GPO Box 3898, SYDNEY NSW 2001

(56) Prior Art Documents
US 4411035
US 4139917
US 2757058

(57) Claim

1. A birthing bed having a bed frame and a foot section, comprising:

a foot panel mounted on said bed frame;

footrest-forming support plates mounted on said frame and having a horizontal position alongside said foot panel;

a mattress overlying said panel and support plates;

said mattress including a central section and side sections mounted adjacent to said central section; and

means permitting said side sections to be moved away from said support plates to expose said support plates,

whereby said support plates become accessible without removal of said foot panel.

17985/92

PCT ANNOUNCEMENT OF THE LATER PUBLICATION OF AMENDED CLAIMS (AND, WHERE APPLICABLE, STATEMENT UNDER ARTICLE 19)

INTERNATIONAL APPLICATION PUBLISHED UNDER THE PATENT COOPERATION TREATY (PCT)

(51) International Patent Classification 5 : A61G 7/00, F16C 3/00

A1

(11) International Publication Number: WO 92/18082

(43) International Publication Date: 29 October 1992 (29.10.92)

(21) International Application Number: PCT/US92/03017

(22) International Filing Date: 15 April 1992 (15.04.92)

(30) Priority data:
685,188 15 April 1991 (15.04.91) US

(71) Applicant: HILL-ROM COMPANY, INC. [US/US]; Highway 46, Batesville, IN 47006 (US).

(72) Inventors: BORDERS, Richard, L. ; 1590 Tremont Lane, Cincinnati, OH 45225 (US). FUSSNER, Robert, T. ; 1042 East Road, Brookville, IN 47012 (US). HAMILTON, Michael, W. ; 29315 Chappelow Ridge Road, West Harrison, IN 47060 (US).

(74) Agents: JACOBS, Wayne, L. et al.; Wood, Herron & Evans, 2700 Carew Tower, Cincinnati, OH 45202 (US).

(81) Designated States: AT, AT (European patent), AU, BB, BE (European patent), BF (OAPI patent), BG, BJ (OAPI patent), BR, CA, CF (OAPI patent), CG (OAPI patent), CH, CH (European patent), CI (OAPI patent), CM (OAPI patent), CS, DE, DE (European patent), DK, DK (European patent), ES, ES (European patent), FI, FR (European patent), GA (OAPI patent), GB, GB (European patent), GN (OAPI patent), GR (European patent), HU, IT (European patent), JP, KP, KR, LK, LU, LU (European patent), MC (European patent), MG, ML (OAPI patent), MN, MR (OAPI patent), MW, NL, NL (European patent), NO, PL, RO, RU, SD, SE, SE (European patent), SN (OAPI patent), TD (OAPI patent), TG (OAPI patent).

Published
With international search report.
With amended claims.

Date of publication of the amended claims:
10 December 1992 (10.12.92)

664550

(54) Title: FOOT SECTION FOR BIRTHING BED

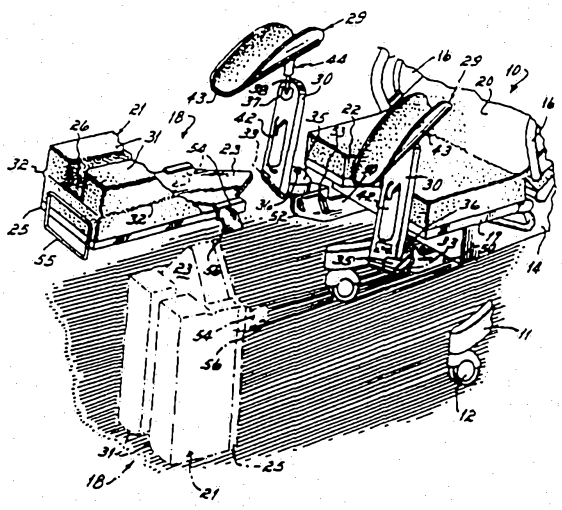

(57) Abstract

A foot section for a birthing bed has a central panel (25) and two lateral plates (30, 30) that function, in an inclined attitude, as footrests and in a vertical attitude as posts for receiving calf supports (29). The calf supports (29) are stored in holsters (42) on the underside of the footrests. The mattress (21) is in three sections, with the outboard sections (31, 31) being hinged to a central section (26) so as to be swung upwardly upon the central section (26) thereby exposing the footrests without having to remove the whole foot section. The central panel (25) can be removed with the mattress and is adapted to be stood on its end for temporary storage, thereby conserving floor space.

Foot Section for Birthing Bed

This invention relates to a birthing bed and more particularly to a foot section for a birthing bed.

Conventionally, a birthing bed has a patient support consisting of a head panel, a seat panel and a foot panel with a mattress covering the panels. The foot panel and its mattress is removable to expose underlying footrests so that the patient can sit up and press her feet against footrests during labor. The removal of the foot panel also permits the mounting of calf supports in the space vacated by the foot panel. The removal of the foot panel permits the doctor to slide a footstool into the space vacated by the foot panel so as to be in a position to assist in delivery.

The current birthing bed, described above, has some disadvantages. After the patient has an epidural, the shifting of the patient's numbed legs from the foot panel to the footrests is at least a two-nurse operation, one nurse holding the patient's leg while a second nurse removes the foot panel.

Further, the calf supports, when used, must be retrieved from storage and thereafter mounted on the bed.

BRIEF SUMMARY OF THE INVENTION

It is the object of the present invention to overcome or substantially ameliorate the above disadvantages.

There is disclosed herein a birthing bed having a bed frame and a foot section, comprising:

a foot panel mounted on said bed frame;

footrest-forming support plates mounted on said frame and having a horizontal position alongside said foot panel;

a mattress overlying said panel and support plates;

said mattress including a central section and side sections mounted adjacent to said central section; and

means permitting said side sections to be moved away from said support plates to expose said support plates,

whereby said support plates become accessible without removal of said foot panel.

There is further disclosed herein a birthing bed, comprising:

a bed frame;

a pair of laterally-spaced forwardly-projecting arms, each said arm having longitudinally-spaced lugs;

means mounting said arms on said bed frame; and

a foot panel having laterally-spaced, depending tongues that are removably inserted between said lugs to mount said foot panel on said bed frame,

whereby said foot panel can be removed from said bed frame by lifting said foot panel with respect to said lugs.

AUSTRALIAN PATENT OFFICE

There is still further disclosed herein a birthing bed having a frame and a pair of calf supports mounted on said frame, each calf support comprising:

a vertical plate;

a calf receptacle;

a post having a ball and socket joint connecting said post to said receptacle;

means for mounting said post on said vertical plate, said post having an upper end, said ball and socket joint including a sleeve fixed to the upper end of said post;

a seat within said sleeve and slidable with respect to said sleeve; and

a ball in said sleeve resting on said seat, wherein:

said sleeve has an inwardly-projecting rim at its upper end confining said ball;

said ball is connected to said receptacle to permit said receptacle to be positioned in a multitude of angular positions; and

means for raising and lowering said seat with respect to said sleeve to clamp and unclamp said ball on said post.

There is still further disclosed herein a birthing bed having a bed frame, comprising:

a footrest having a footrest support plate pivotally mounted along a rear edge thereof to each side of said frame, said footrest support plate having a free end and an underside and being operable to swing between a lowered foot supporting position and a raised calf supporting position;

a calf support adapted to be selectively mounted to said footrest support plate in a calf-supporting position and in a storage position;

means for mounting said calf support on the free end of said footrest support plate when said footrest support plate is in its raised calf supporting position whereby said calf support may be placed in its calf-supporting position, and

AUSTRALIAN PATENT OFFICE

means for mounting said calf support on the underside of said footrest support plate when said footrest support plate is in its lowered foot supporting position whereby said calf support may be placed in its storage position.

There is still further disclosed herein a birthing bed comprising:

a bed frame;

a foot section comprising a center section removably mounted on said bed frame; a footrest mounted on said bed frame on each side of said center section independently of said center section; and means mounting each footrest to swing horizontally outward and vertically-upward with respect to said bed frame;

a transverse beam;

a parallelogram linkage mounting said transverse beam to said bed frame; and

means for raising and lowering said linkage to raise and lower said beam, said center section and footrests being mounted on said beam.

BRIEF DESCRIPTION OF THE DRAWINGS

A preferred form of the present invention will now be described by way of example with reference to the accompanying drawings, wherein:

Fig. 1A is a perspective view of a birthing bed in accordance with the present invention;

Fig. 1B is a fragmentary perspective view of the foot section of the birthing bed with a section of the mattress folded upon the center panel;

Fig. 1C is a fragmentary perspective view of the foot section showing the footrest in an angulated position;

Fig. 1D is a fragmentary perspective view of an alternative embodiment of the foot section;

Fig. 2A is a fragmentary perspective view of the foot section showing the calf supports in position;

Fig. 2B is a fragmentary elevational view of the foot section showing the foot section removed from the main body of the birthing bed;

Fig. 3 is a plan view of the foot section and taken generally in the direction of the arrows 3-3 in Fig. 1A. The shape of the foot end is illustrated in the preferred form (the shape being diagrammatic in Figs. 1A-1D) with the mattress removed;

Fig. 4 is a cross-sectional view taken along lines 4-4 of Fig. 3 showing the mechanism for raising and lowering the foot support and foot section;

Fig. 4A is a disassembled perspective view of the center panel of the foot section;

Fig. 5 is a side elevational view of the footrest taken along lines 5-5 of Fig. 3;

Fig. 6 is a cross-sectional view taken along lines 6-6 of Fig. 5;

Fig. 7 is a cross-sectional view taken along lines 7-7 of Fig. 5;

Fig. 8 is a cross-sectional view taken along lines 8-8 of Fig. 7;

Fig. 9 is a disassembled perspective view taken from the underside of the footrest;

Fig. 10 is a disassembled perspective view of the calf support mount;

Fig. 11 is a side elevation of the footrest converted to a calf support;

Fig. 12 is a cross-sectional view taken along lines 12-12 of Fig. 11;

Fig. 13 is a fragmentary elevational view of the ball joint; and

Fig. 14 is a fragmentary view similar to Fig. 13 showing the ball rotated 90°.

DETAILED DESCRIPTION OF THE INVENTION

A birthing bed 10 in accordance with the present invention is shown in Fig. 1A. The bed has a base 11 which has casters 12 providing rolling support along a floor. A parallelogram linkage 13 connects a bed frame 14 to the base. The bed frame supports a head panel 15 with side guards 16, a seat panel 17 and a foot section 18. A head end mattress section 20 covers the head panel 15 and the seat panel 17. A foot section mattress 21 covers the foot section 18. Optionally, the forward edge of the seat panel and mattress 17 has a V-shaped recess 22 which, when the center section of the foot section 18 is removed, facilitates delivery of the baby. The recess 22 is otherwise filled by a triangular projection 23 on the foot section 18 that mates with the recess 22.

The foot section 18 has a subframe 24 and central panel forming the center section of the foot

section 25, the foot section 18 supporting a center mattress section 26. Although shown solid for clarity, the center panel 25 is a hollow, rigid, blow-molded plastic member as best shown in the plan view of Fig. 3. As shown in Fig. 4A, the central panel 25 is mounted on an aluminum frame 27 of the subframe 24 and is bolted to it. On each side of the panel 25 is a plate 30 forming a footrest. As shown in Fig. 1B, the plate 30 supports a lateral mattress section 31 which is hinged by a plastic covering at 32 to the central mattress section 26. A calf support 29 is mounted on the lower surface of plate 30 in a manner described below. As shown in Fig. 1D, the lateral mattress section 31 can be completely removable and attachable by a hook and loop connection 32a formed on the abutting surfaces of each lateral section and central section, respectively.

The plate 30 is pivoted on a horizontal axis at 33 to a rotatable block 35, the block being pivoted about a vertical axis on a pin 36. The pivot connection between the plate 30 and the block 35 permits a ratcheting upwardly of the plate 30 so that it can be positioned at any one of a plurality of angular relationships at 9° intervals, from horizontal 117°, by a mechanism shown in Figs. 5 to 9 and to be described in detail below. As shown in Figs. 10 and 11, the plate 30 has a pocket 37 on its underside adjacent its free end. The calf support 29 has a post 38 with

a spade 39 on its lower end for insertion into the pocket 37 to mount the calf support to the footrest. The calf support, when in storage, is slidably mounted in a holster 42 on the underside of the plate 30. See also Figs. 2A and 2B for the configuration of the holster.

The calf support has a receptacle 43 which receives the patient's calf, the receptacle being generally U-shaped in cross section. A post 44 is connected by a ball joint 45 (shown in detail in Fig. 12 and to be described later) to a casting 43a to which the receptacle 43 is bolted. The receptacle can be fixed in one of an infinite number of angular positions universally about the ball joint, as will be seen from the detailed description of Figs. 11 and 12.

As shown in Figs. 2A, 2B, and 3, the block 35 is mounted on forwardly-extending arms 50 which project integrally from a transverse beam 51 that supports the foot section. The arms 50 and beam 51 are a single yoke casting. Each arm has a pair of horizontally-spaced, vertically-oriented lugs 52, 53 (see also Fig. 4). The foot panel 25 has laterally spaced, depending tongues 54 fixed to the frame 27 at its rearward end. The tongues 54 fit between the lugs 52, 53 to provide removable support of the foot panel 25. As can be seen from Fig. 2B, the foot panel can easily be removed simply by lifting it vertically, with a slight pivoting of the front end downward, out

of the space between the adjacent lugs 52, 53. At the front edge of the front panel is a rectangular-shaped stand 55 mounted on the frame 27. The stand 55 provides a handle for grasping the foot panel and provides a floor-engaging support to hold the foot panel in a vertical orientation when it has been removed from the birthing bed.

Each tongue 54 has forward projections 56 normally lying under lug 52. The projections prevent the tongue from rising out of the space between lugs 52 and 53 when the front end of the foot panel is tilted up, as by a patient placing his knee on the projection 23 or by lifting on stand 55. The stand therefore can be used as a handle to pull on the bed without dislodging the foot panel.

Referring to Figs. 3 and 4, the transverse beam 51 that provides the main support for the foot section is connected, on each side, to a parallelogram linkage 60 which permits the foot panel to move from an upper position 57 shown in dashed lines, through an intermediate position wherein the arms 50 are shown in full lines to a lower position 58 where the arms 50 are shown in dashed lines. The transverse beam 51 is raised and lowered by a drive link 61 connected to a bellcrank lever 62 pivoted to the bed frame at 63. An electric actuator 64 is connected by a pivot pin 66 on the bellcrank lever 62 to cause the bellcrank lever to pivot between the raised and lowered positions.

The pivotal support for each footrest 30 is shown in Figs. 5-9. Each arm 50 has an outwardly-directed flange 70 having a vertical bore 71. A shaft 72 is press fit into the bore and is held against rotation by a key 73 fitting in slots 74 in the shaft and 75 in the flange 70. A quarter gear 76 is slidably mounted on the shaft and keyed to it by the key 73. Bearings 77 seat on top and bottom of the quarter gear between plate 78 and block 35. The plate 78 is mounted on the underside of the block 35 and secures the assembly of quarter gear and bearings to the block. The block 35 is rotatable about the shaft 72 and is vertically slidable with respect to it so that it can be removed. A pawl 80 is pivoted at 81 to the block 35 and has a recessed jaw 82 which engages teeth 83 on the quarter gear 76. A compression spring 84 mounted between the block and the pawl 80 urges the pawl into engagement with the teeth 83. The pawl has an arm 85 connected to a slide 86 having a pull handle 87 at its free end. When the pull handle is slid outwardly with respect to the block 35, the block 35 and the footrest 30 mounted upon it can be swung horizontally to any one of a number of angular positions from zero degrees to 90° in 10° increments toward the outside of the bed.

As indicated above, the footrest can be ratcheted upwardly from its horizontal position as shown in Fig. 1B through the angular footrest position

of Fig. 1C to a vertical position for mounting the calf support 29, as shown in Figs. 2A and 2B. The mechanism for ratcheting the footrest is shown principally in Figs. 7-9. The block 35 is fixed to a tubular shaft 100. The shaft has serrations 101 around a portion of its surface. A serrated pawl 103 is in engagement with the serrations 101 as shown in Figs. 7 and 8. The pawl is slidable in the footrest 30. The pawl 103 controls the position of the footrest and maintains it in any selected position through 81° of upward swinging unless the pawl is released. The footrest will continue movement to 117°. The relationship of the respective serrations is suc that the pawls permit the footrest to swing upwardly with the pawls ratcheting against the serrations but block movement downwardly. The serrations permi the footrest to swing past vertical to about 117°.

A partial annular slot 104 in the shaft 100 is engaged by a stud 105 mounted in the footrest. The slot 104 permits movement of the footrest through 117°, but blocks it in either direction outside of 117°.

The pawl 103 is urged by a compression spring 106 into engagement with the shaft 100. The pawl has a bore 110. Referring to Figs. 7-9, a bracket 111 carries pin 112 that projects into the bore 110 in the pawl 103. An L-shaped actuating lever 115 is fixed to the bracket 111 to pivot the bracket

111. An L-shaped bar 117 having a pull handle 118 has a slot 119 which engages a leg 120 of the L-shaped lever 115. It can be seen from Figs. 7 and 8 that pulling on the L-shaped bar will pivot the bracket 111 causing the pin 112 to swing down as viewed in Fig. 8. When the arm 117 is pulled, the pawl will be moved out of engagement with the serrations in the shaft. A tension spring 122 returns arm 117 and, hence, the pawl 103 to its position of engagement with the shaft. The footrest 30 can be raised from its horizontal position to any one of a number of positions through to 117°. Then, by pulling on the arm 117, the pawl 103 releases and the footrest can be returned to its horizontal position.

Each receptacle of the calf support 29 has a ball joint 45 connecting it to a post 44. See Figs. 11 and 12. The post 44 has a sleeve 130 mounted on the elongated post 38. The post has screw threads 131 on its upper end and has the spade 39 on its lower end. The spade 39 drops in the pocket 37 of the footrest to mount the calf support and prevent it from rotating with respect to the upper end of the footrest. The uppermost end of the post 38 has a reduced diameter portion 135. The sleeve 130 surrounding the upper end portion has an inwardly-directed annular flange 138 welded to the post 38. A seat 140 is slidable in the sleeve 130 and has a plurality of depending pins 141 passing through enlarged bores 142

in the annular flange 138. The lower ends of the pins are in engagement with the upper race of roller bearings 144. A sleeve 145 is threaded on the threaded portion 131 of shaft 38 and engages the lower race of bearings 144. A plastic grip 146 is fixed to the sleeve 145. A ball 150 connected by a stud 151 to the receptacle 43 rests upon the seat 140 and is captured within the sleeve 130 by an inwardly-directed rim 152 and ring 153. When the sleeve 145 is rotated in one direction, the rim pulls the ring 153 against the ball and clamps it against the seat to fix the position of the ball. When the sleeve is rotated in the opposite direction, the ball is released.

The stud must be capable of making a right angle pivot with respect to the post 44 so that the cap support 29 can be pivoted to lie generally parallel to the post 44 for the storage position as depicted in Fig. 5.

To this end, the sleeve 130 has, at its upper end, a V slot 160 as shown in Figs. 13 and 14. A stud 151 has a matching taper as best shown in Fig. 14 so that when the stud 151 and the cap support that it carries is pivoted with respect to the sleeve, the stud 151 will lie in the V slot 160 as shown in Fig. 14.

OPERATION

In the operation of the invention, the patient is seated on a seat panel 17 with legs

comfortably resting on the mattress 21 of the leg section. When labor begins, the patient may wish to put her feet against the footrest to assist the contractions. Assuming the patient has been administered an epidural anesthetic, the patient's legs are numb. The attending nurse will place the patient's legs on one side of the footrest mattress and raise the pivotal section 31 on the other side as depicted in Fig. 1B. The footrest 30 is ratcheted upwardly as shown in Fig. 1C and the patient's foot is placed upon it. The opposite leg of the patient is then placed upon the now folded-over mattress portion 31 and the opposite lateral mattress section is folded upon the center section as shown, for example, in Fig. 2A. The opposite footrest is then ratcheted up to a footrest position comparable to that of Fig. 1C and the patient's foot is placed upon it.

At the time of delivery, it may be desirable to raise the patient's calves and support them in a raised position. To make that transition, the footrests are raised to a vertical position. The calf supports 29 are removed from their holsters 42 and the spades 39 are inserted into the pockets 37 of the footrests. The angular position of each receptacle is adjusted to the desired position by rotating the sleeve 145 to free the ball 150 permitting the receptacle to be shifted. Thereafter the sleeve 145 is rotated to tighten the ring 153 against the ball,

thereby fixing the calf support in the desired position.

The gynecologist may find it useful simply to sit on the mattress sections 31 as they appear in Fig. 2A. The foot section can, of course, be lowered by dropping the transverse beam 50 as described above to lower the calf rests and remaining mattress section. Alternatively, as shown in Fig. 2B, the central panel 25 and mattress sections can be removed simply by raising out of the lugs 52, 53 with the mattress section being stood on its rectangular stand 55 to minimize the space required for temporary storage of it in the birthing room.

From the above disclosure of the general principles of the present invention and the preceding detailed description of a preferred embodiment, those skilled in the art will readily comprehend the various modifications to which the present invention is susceptible. Therefore, we desire to be limited only by the scope of the following claims and equivalents thereof:

We claim:

The claims defining the invention are as follows:

1. A birthing bed having a bed frame and a foot section, comprising:

a foot panel mounted on said bed frame;

footrest-forming support plates mounted on said frame and having a horizontal position alongside said foot panel;

a mattress overlying said panel and support plates;

said mattress including a central section and side sections mounted adjacent to said central section; and

means permitting said side sections to be moved away from said support plates to expose said support plates,

whereby said support plates become accessible without removal of said foot panel.

2. A birthing bed as in claim 1, wherein said means permitting said side sections to be removed comprises means hinging together adjacent upper corners of said central section and said side sections, thereby permitting said side sections to be swung upwardly and over on top of said central section.

3. A birthing bed as in claim 1, wherein said means permitting said side sections to be removed comprises means forming detachable fasteners on said central and side sections, respectively, said fasteners normally joining said side sections to said central section while permitting said side sections to be removed when access to said support plates is desired.

4. A birthing bed as in claim 1, further comprising:

means pivoting said support plates to said bed frame for swinging between horizontal and vertical positions;

calf receptacles; and

means for mounting said calf receptacles on the ends of said support plates in an attitude to support a patient's legs.

5. A birthing bed as in claim 4, further comprising a holster on the underside of each said support plate, said calf receptacle being removable from the end of said plate and mountable in said holster when not in use.

6. A birthing bed as in claim 4, further comprising means for pivoting said support plates on said frame to swing horizontally about vertical axes.

7. A birthing bed as in claim 1, further comprising:

means for removably mounting said foot panel on said bed frame.

8. A birthing bed as in claim 1, further comprising:

a transverse beam;

a parallelogram linkage mounting said transverse beam to said bed frame; and

AUSTRALIAN PATENT OFFICE

means for raising and lowering said linkage to raise and lower said beam, said foot panel and support plates being mounted on said beam.

9. A birthing bed as in claim 8, further comprising a pair of spaced forward-projecting arms projecting from said beam, each arm having a pair of inwardly-facing lugs that are horizontally spaced apart, said foot panel having laterally spaced, depending tongues that are projectable between respective lugs on said arms to removably mount said foot panel on said beam.

DATED this Thirteenth Day of September 1995

Hill-Rom Company Inc.

Patent Attorneys for the Applicant

SPRUSON & FERGUSON

AUSTRALIAN PATENT OFFICE

17985/92

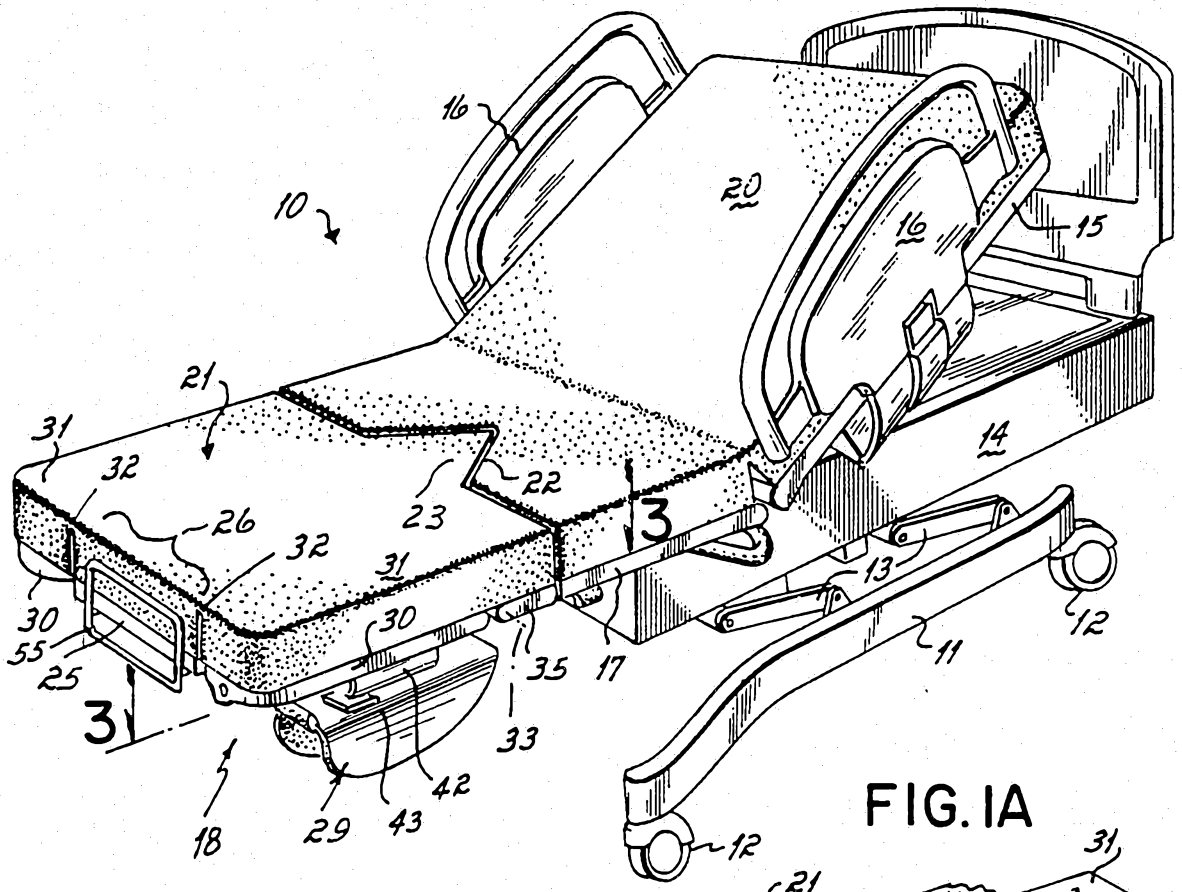

FIG. IA

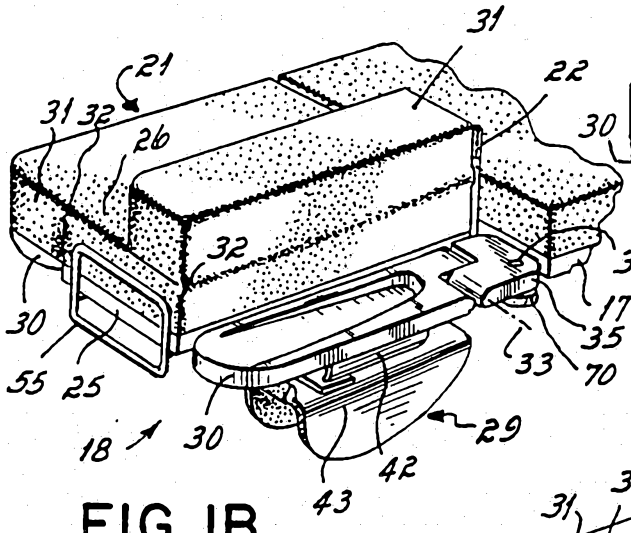

FIG. IB

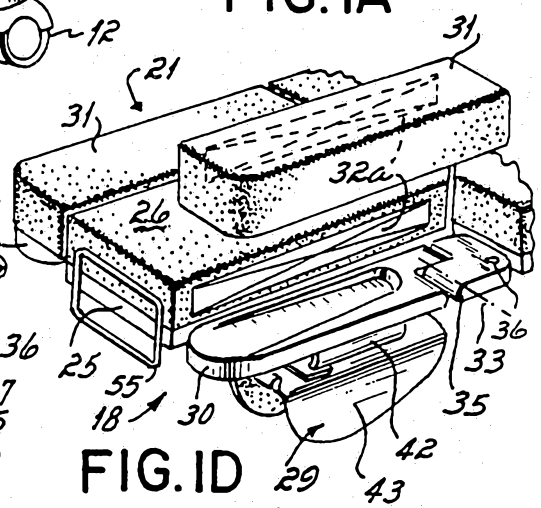

FIG. ID

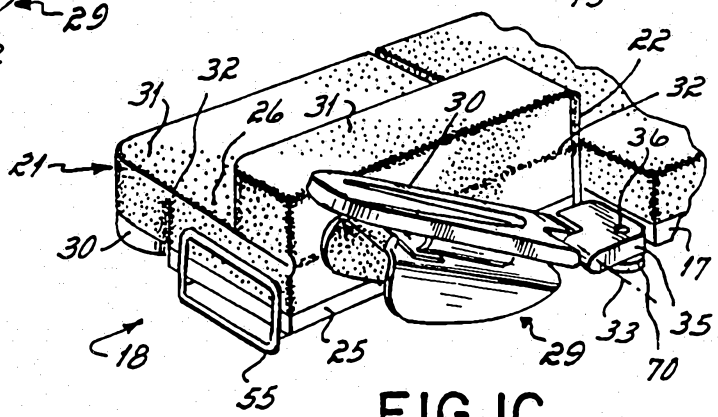

FIG. IC

17985/92

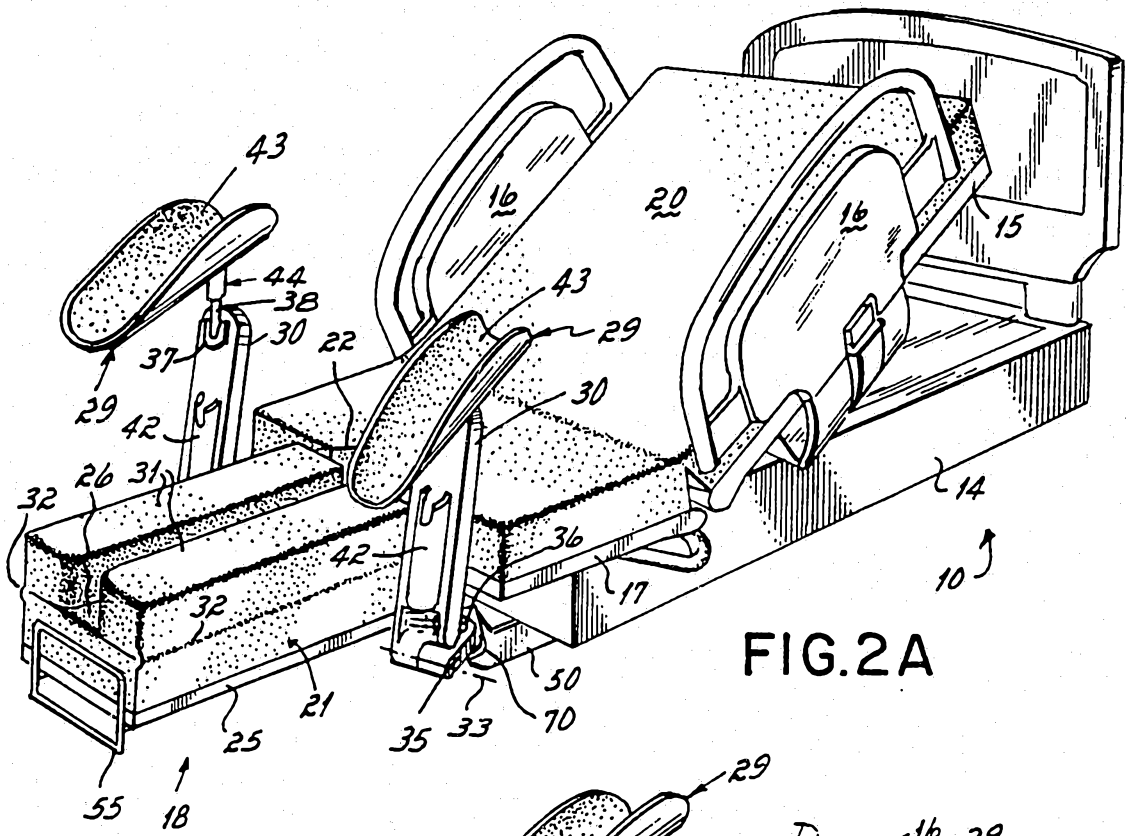

FIG.2A

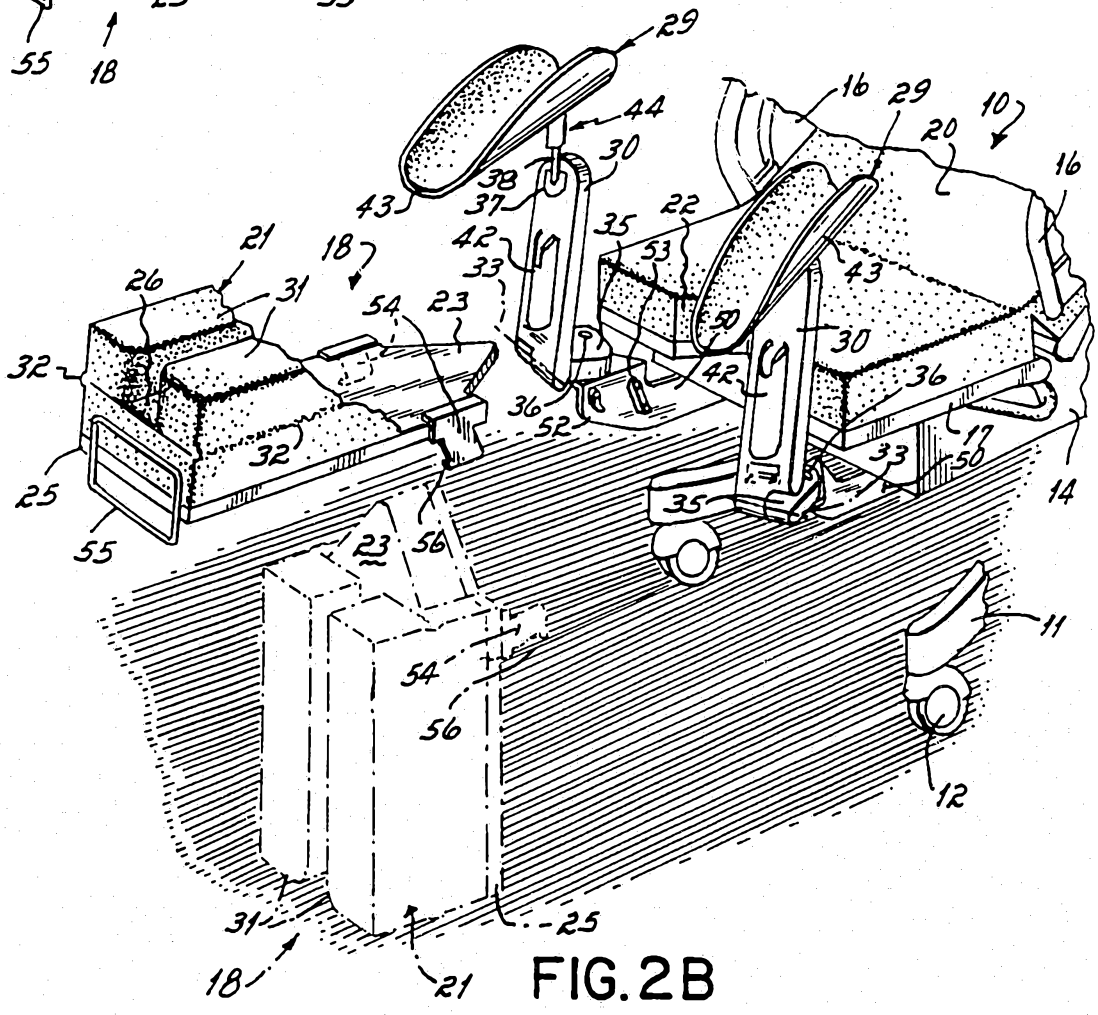

FIG.2B

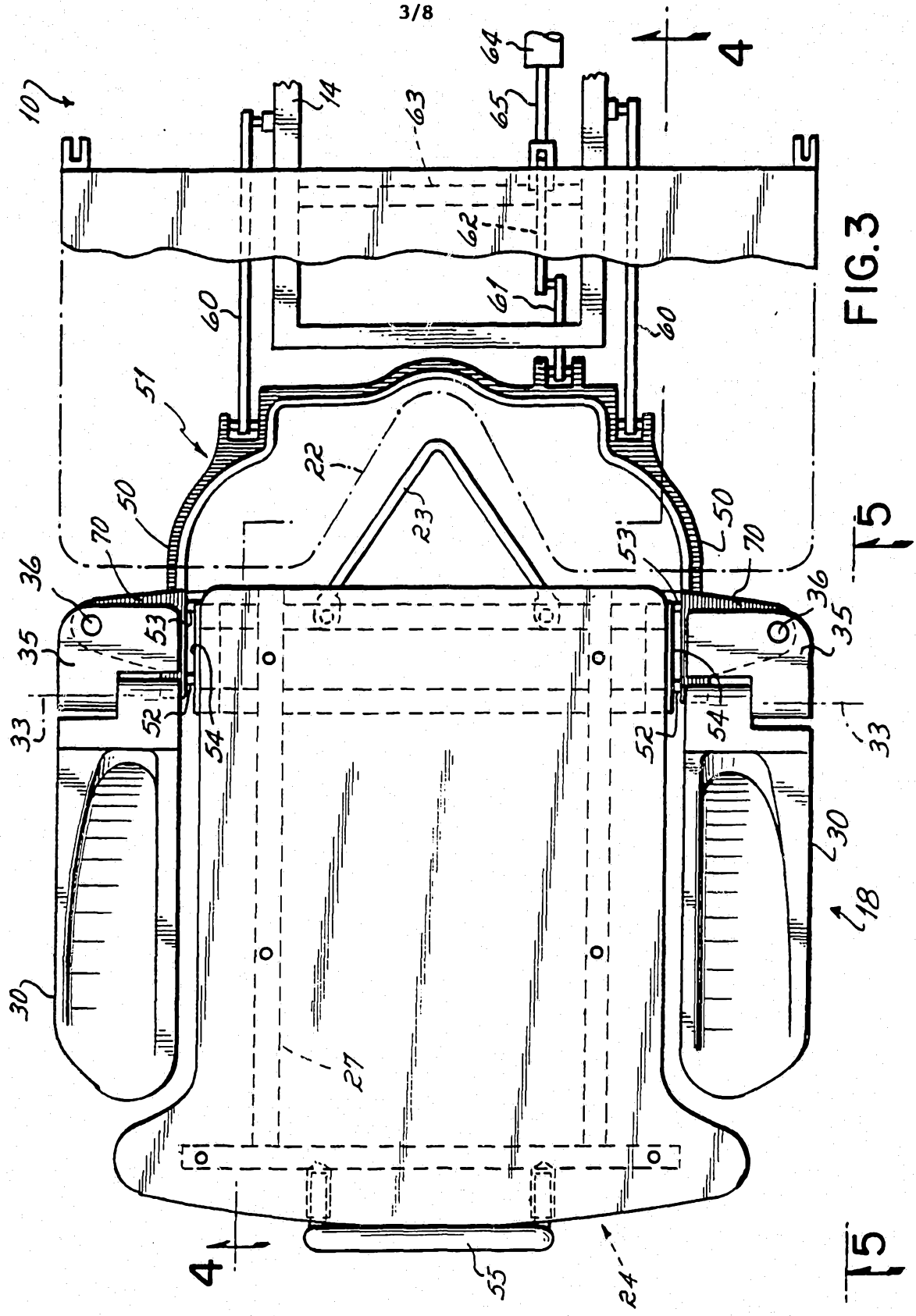
10
14
63
64
65
4
62
61
60
60
51
22
23
50
50
70
70
36
36
35
35
53
53
33
33
52
52
54
54
30
30
18
27
55
24
5
5
4

FIG.3

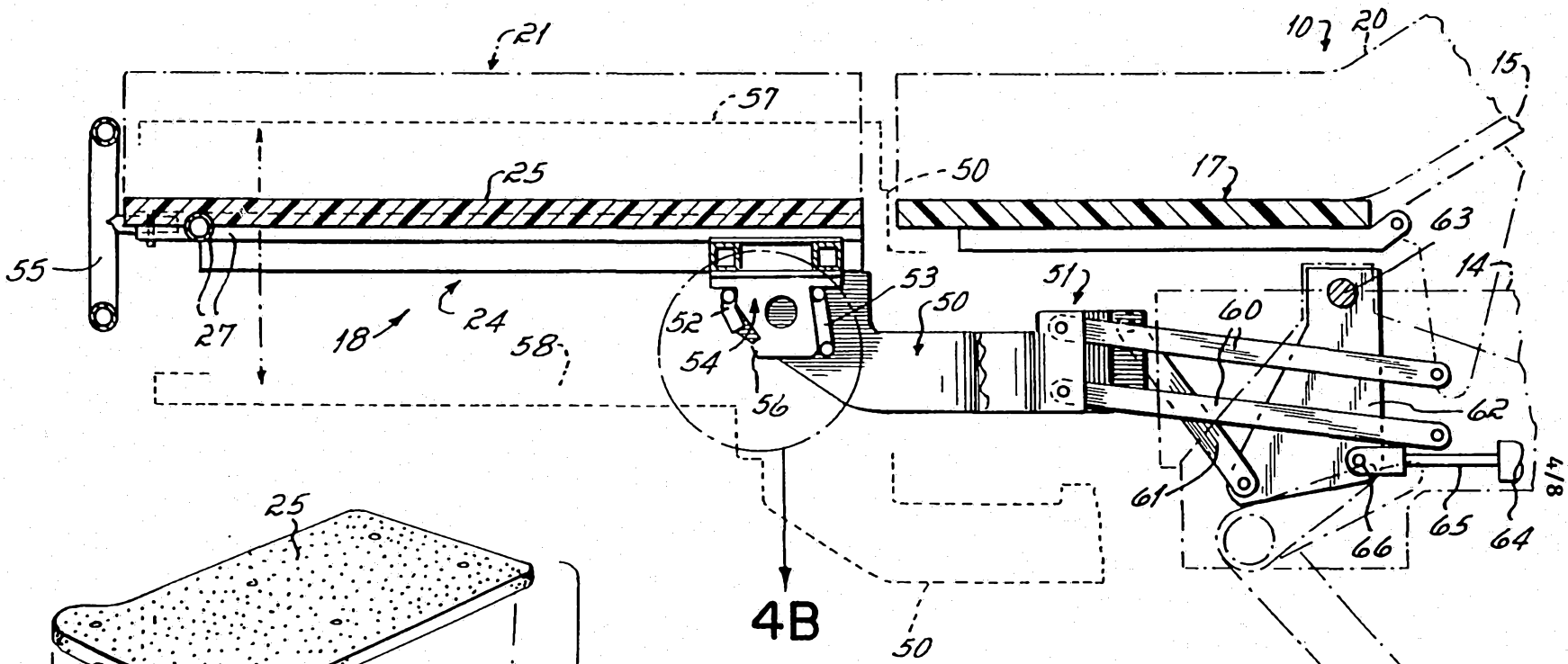
21
107
20
15
57
25
50
17
63
55
53
51
14
27
18
24
58
52
50
60
54
56
62
61
66
65
64
4B
50

FIG. 4

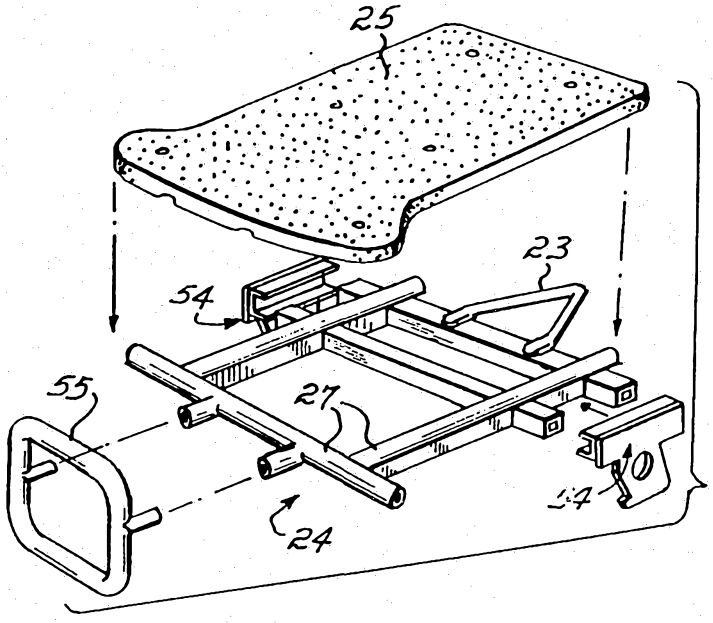
25
23
54
55
27
24
54

FIG. 4A

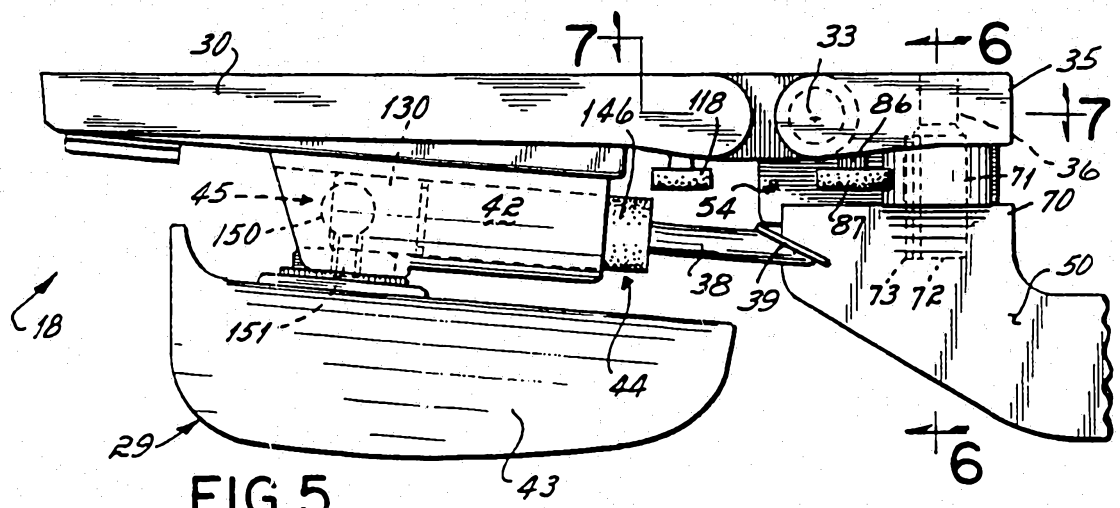

FIG.5

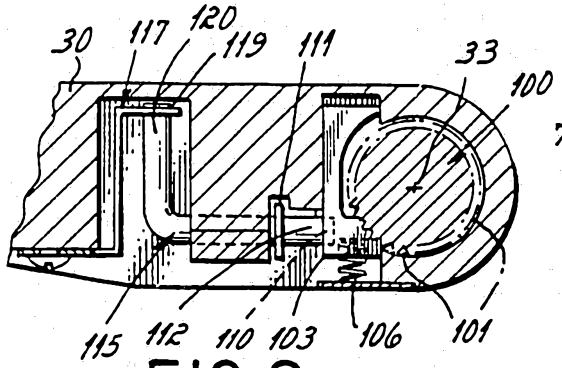

FIG. 8

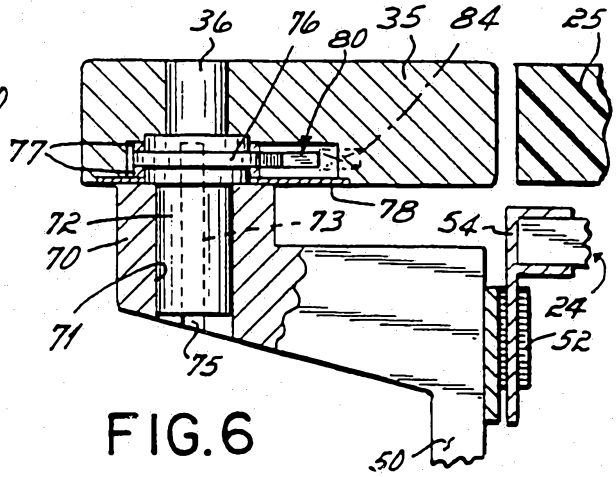

FIG.6

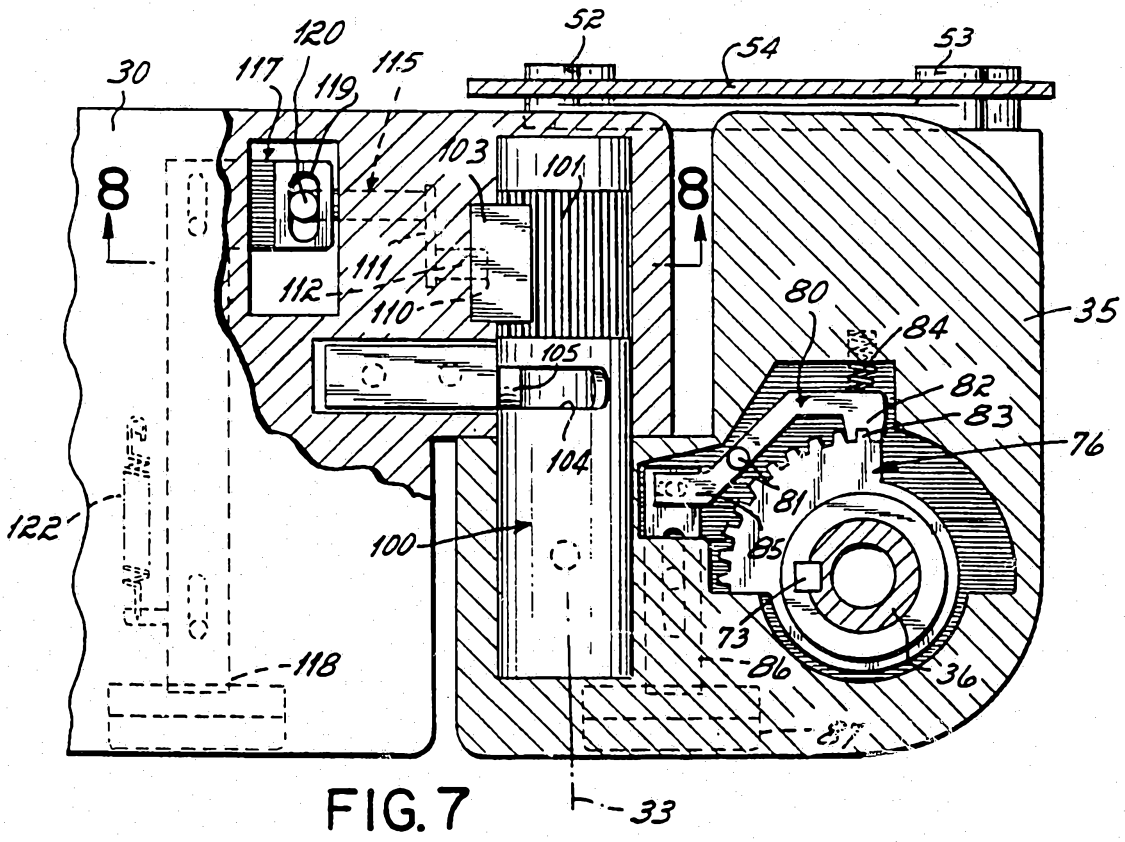

FIG. 7

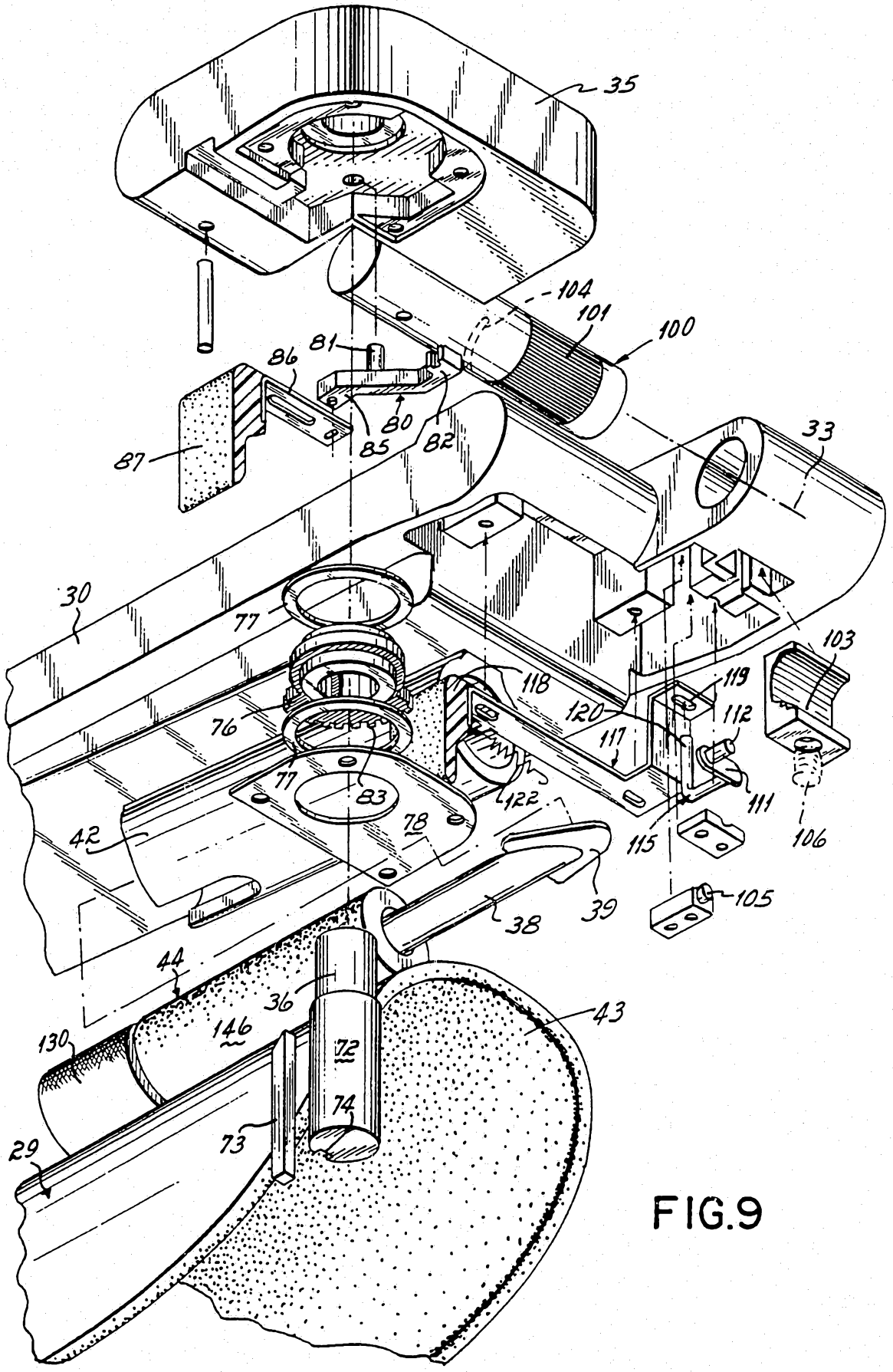
35
104
101
100
81
86
80
85
82
87
33
30
77
103
118
119
120
112
76
117
77
83
122
111
42
78
115
106
39
105
38
44
36
43
130
146
72
74
73
29

FIG.9

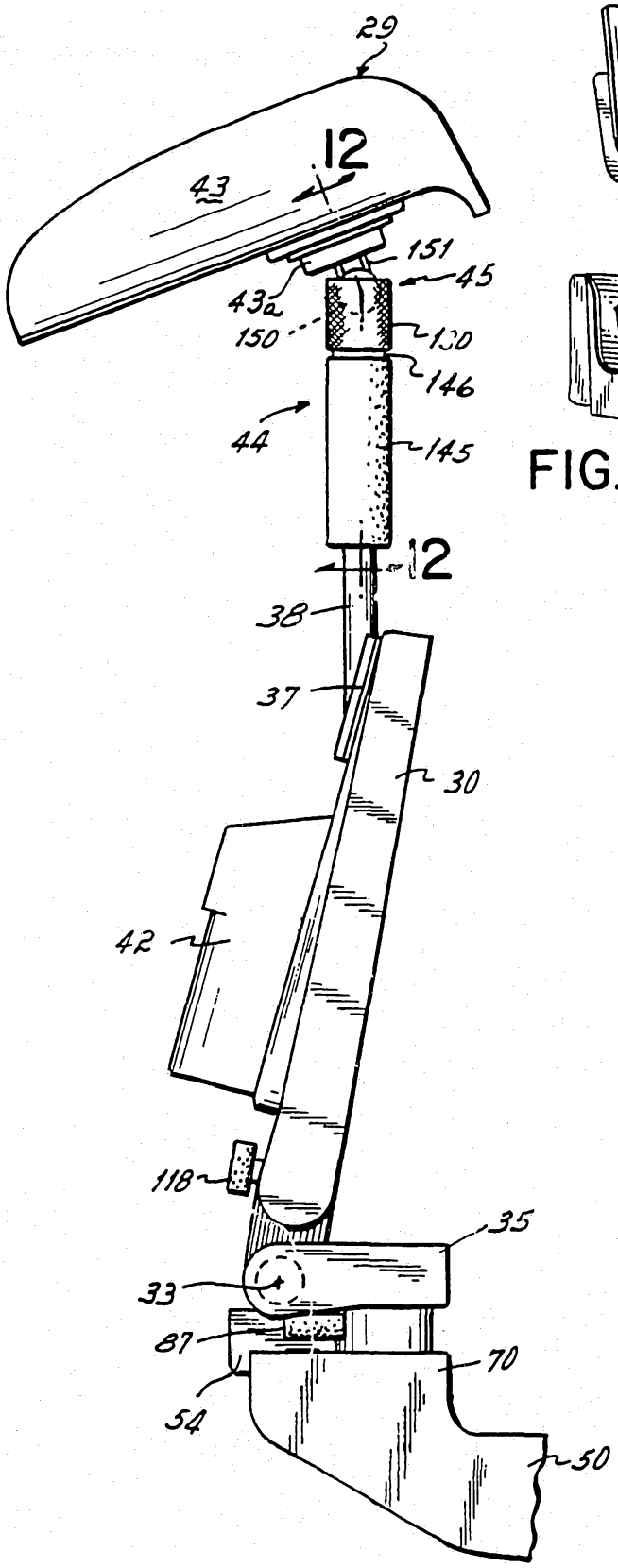

FIG. 11

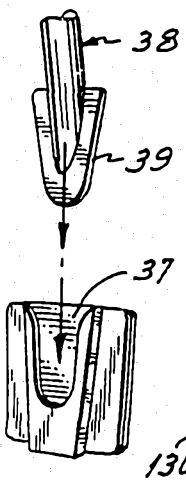

FIG. 10

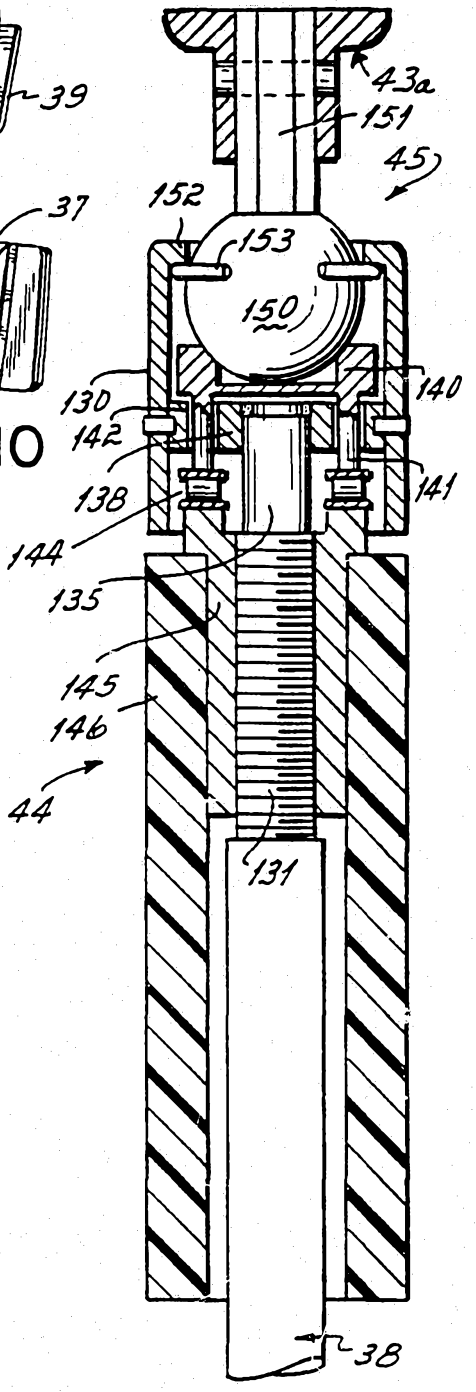

FIG. 12

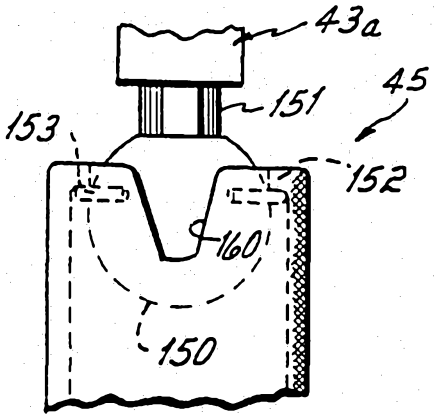

FIG. 13

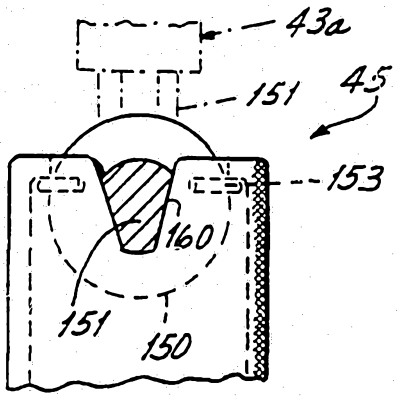

FIG. 14

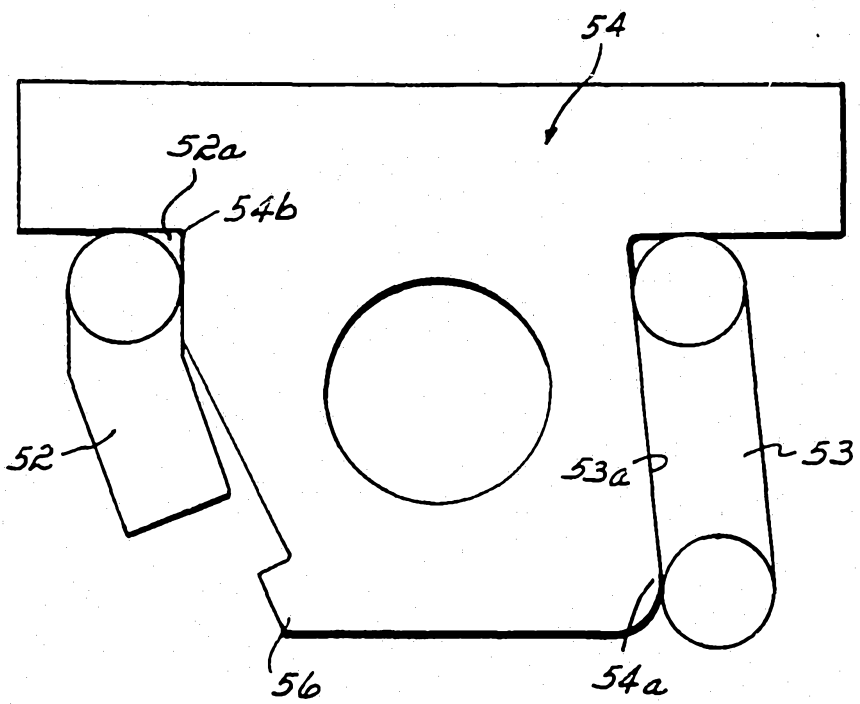

FIG. 4B

INTERNATIONAL SEARCH REPORT

International application No.
PCT/US92/03017

A. CLASSIFICATION OF SUBJECT MATTER

IPC(5) :A61G 7/00; F16C 3/00
US CL :5/602, 624, 648, 465; 403/90
According to International Patent Classification (IPC) or to both national classification and IPC

B. FIELDS SEARCHED

Minimum documentation searched (classification system followed by classification symbols)

U.S. : 5/649; 248/181; 403/148, 145

Documentation searched other than minimum documentation to the extent that such documents are included in the fields searched

Electronic data base consulted during the international search (name of data base and, where practicable, search terms used)

C. DOCUMENTS CONSIDERED TO BE RELEVANT

Category*	Citation of document, with indication, where appropriate, of the relevant passages	Relevant to claim No.
X Y	US, A, 4,894,786 (FENWICK) 01 January 1990.	22 & 23 24 & 25
X	US, A, 3,599,963 (GROVER) 08 August 1971.	10
X	US, A, 2,757,058 (BROESEL) 07 July 1956.	19 & 20
A	US, A, 4,139,917 (FENWICK) 02 February 1979.	1-27
A	US, A, 4,411,035 (FENWICK) 10 October 1983.	1-27
X	US, A, 4,579,009 (CARMICHAEL) 01 April 1986.	15,16
A	US, A, 4,708,510 (MCCONNELL) 24 November 1987.	15-18
A	US, A, 3,375,044 (PETERSON) 26 March 1968.	15-18
A	US, A, 3,900,180 (MCPHEE) 19 August 1975.	15-18

☐ Further documents are listed in the continuation of Box C. ☐ See patent family annex.

*	Special categories of cited documents:	"T"	later document published after the international filing date or priority date and not in conflict with the application but cited to understand the principle or theory underlying the invention
"A"	document defining the general state of the art which is not considered to be part of particular relevance	"X"	document of particular relevance; the claimed invention cannot be considered novel or cannot be considered to involve an inventive step when the document is taken alone
"E"	earlier document published on or after the international filing date	"Y"	document of particular relevance; the claimed invention cannot be considered to involve an inventive step when the document is combined with one or more other such documents, such combination being obvious to a person skilled in the art
"L"	document which may throw doubts on priority claim(s) or which is cited to establish the publication date of another citation or other special reason (as specified)	"&"	document member of the same patent family
"O"	document referring to an oral disclosure, use, exhibition or other means		
"P"	document published prior to the international filing date but later than the priority date claimed		

Date of the actual completion of the international search 07 JULY 1992	Date of mailing of the international search report 10 SEP 1992
Name and mailing address of the ISA/ Commissioner of Patents and Trademarks Box PCT Washington, D.C. 20231 Facsimile No. NOT APPLICABLE	Authorized officer ERIC NICHOLSON Telephone No. (703) 308-0829

Form PCT/ISA/210 (second sheet)(July 1992)*