Jan. 2, 1923. 1,440,927.

J. MIHALICZ.

VEHICLE HOOD AND CURTAIN FASTENER.

FILED APR. 18, 1922.

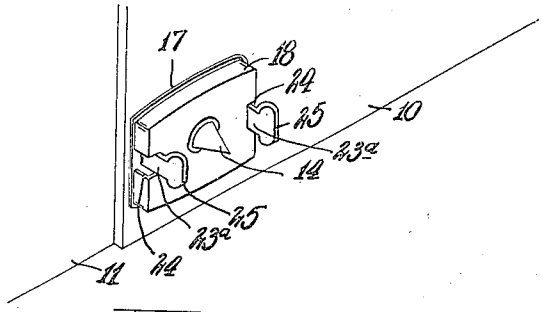

FIG. 1

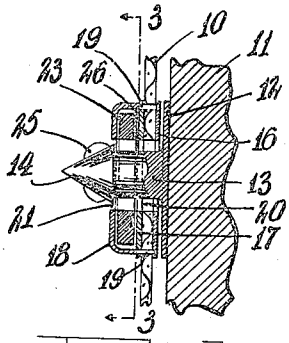

FIG. 2

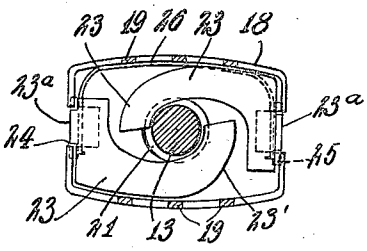

FIG. 3

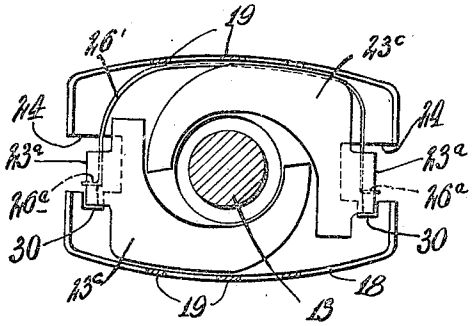

FIG. 4

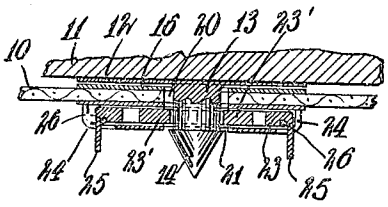

FIG. 5

Inventor

John Mihalicz

By Soltau & Polachek

Attorney

Patented Jan. 2, 1923. 1,440,927

UNITED STATES PATENT OFFICE.

JOHN MIHALICZ, OF PUNNICHY, SASKATCHEWAN, CANADA.

VEHICLE HOOD AND CURTAIN FASTENER.

Application filed April 18, 1922. Serial No. 555,299.

To all whom it may concern:

Be it known that I, JOHN MIHALICZ, a subject of Great Britain, residing at Punnichy, in the Province of Saskatchewan and Dominion of Canada, have invented certain new and useful Improvements in Vehicle Hood and Curtain Fasteners, of which the following is a specification.

This invention relates to a curtain fastener intended more particularly for fastening the curtains of automobiles, motor boats, or other vehicles.

The invention has for an object to provide a novel and improved form of curtain fastener characterized by simplicity of construction and ease of manipulation.

For further comprehension of the invention, and of the objects and advantages thereof, reference will be had to the following description and accompanying drawings, and to the appended claims in which the various novel features of the invention are more particularly set forth.

Fig. 1 of the drawings is a detail perspective view showing my improved curtain fastener as in actual use.

Fig. 2 is a central vertical transverse sectional view thereof.

Fig. 3 is a longitudinal vertical sectional view taken on the line 3—3 of Fig. 2.

Fig. 4 is a central horizontal sectional view.

Fig. 5 is a similar view to Fig. 3 but showing a modification.

Referring now to the drawings the reference numeral 10 indicates a portion of a curtain such as is used on automobiles, the frame or body element to which the curtain is attached being indicated at 11. As here shown my improved curtain fastener comprises a disk 12 rigidly fixed on the element 11 and having a projecting central stud 13 provided with an enlarged head 14 of conical shape, this stud being engaged, beneath the head 14, by a pair of spring pressed hooked members carried by the curtain and which are here secured in place as follows:

Upon opposite sides of the curtain 10 are placed a pair of disks, 16 and 17 respectively, upon the outer one 17 of which is positioned a flat housing 18, these parts being here fixed in position by means of lugs 19 projecting from the housing and through the curtain and suitable apertures in the two disks, and having their ends riveted down on the inner disk 16. Extending centrally through the two disks 16 and 17 and the curtain 10 is an opening 20 of sufficient size for the passage of the head 14 of stud 13, the housing having a corresponding opening 21 formed therein.

Within the housing the hooked members are slidably positioned and here comprise a pair of bars 23 slidable along respective sides of the housing between the opening 21 and the side walls thereof, and having their inner ends turned toward one another in opposed relation as at 23′ and adapted to engage on opposite sides of the stud 13. The outer ends of these bars 23 are turned outwardly as at 23^a, at right angles to the curtain, through longitudinal slots 24 formed in the ends of the housing 18, and are provided with finger pieces 25. The hooked inner ends 23′ of the bars are resiliently pressed toward one another by means of a bow spring 26 seating freely in the housing 18 and extending along beside one of the bars 23, and having its ends in contact with and pressing outwardly on, the outturned ends 23^a of the bars 23.

As will be apparent when the curtain is to be fastened it is only necessary to place the member on the curtain 10 over the stud 13 on the body element 11, the hooked fastening members 23 snapping automatically into place. To release the curtain it is only necessary to press the finger pieces 25 toward one another.

In Fig. 5 I have shown a modified form of spring retainer. In this construction the hooked bars 23^c are similar to the bars 23, but have slight lateral play at their outer ends. The spring 26′ is fastened at its ends to these bars as indicated at 26^a and acts both to urge the ends of the bars outwardly, similarly to spring 26, but also to press them laterally against one of the walls of the slots 24 in the housing 18, in which walls are formed notches 30. When the hooked ends of the bars 23^c are engaged with the stud 13, under the head 14 thereof, the outturned ends 23^a thereof are engaged in the notches 30, thus holding the bars rigidly against longitudinal movement. When the fastener is to be released the outturned ends of the bars are first pressed laterally to free them from the notches 30 and then longitudinally inwardly to disengage their hooked ends from under the stud head.

It will be understood that various other changes and modifications might be made in

the construction here shown without departing from the spirit and scope of the invention as defined in the appended claims.

Having thus described my invention what I claim as new and desire to protect by Letters Patent of the United States is as follows:

1. A curtain fastener comprising a stud adapted to be mounted on the part to which the curtain is to be secured, a housing on the curtain having an aperture to receive said stud, a pair of opposed hooked bars slidable in said casing and adapted for limited transverse movement, co-operating parts on said bars and housing adapted to be engaged together by transverse movement of said bars to lock the latter against sliding movement, and a spring urging said bars in a direction both to engage them with the said stud and to engage the said co-operating parts with one another.

2. A curtain fastener comprising a headed stud adapted to be mounted on the part to which the curtain is to be secured, a housing on the curtain having an opening leading thereinto through the curtain for insertion of the head of said stud, a pair of bars slidably disposed in said housing on opposite sides of said opening and having hooked ends, a bow spring engaging said bars to urge them in a direction to engage said hooked ends under the head of said stud, and outturned ends on said bars projecting through slots in the said housing, and finger pieces on said outturned ends, said slots having notches formed in one wall thereof, and said springs acting also to press the said outturned ends of the bars against the said walls, for the purpose specified.

In testimony whereof I have affixed my signature.

JOHN MIHALICZ.