Sept. 9, 1930. E. VERLINDEN 1,775,262

PNEUMATIC SWITCH

Filed Aug. 22, 1928

FIG. 1

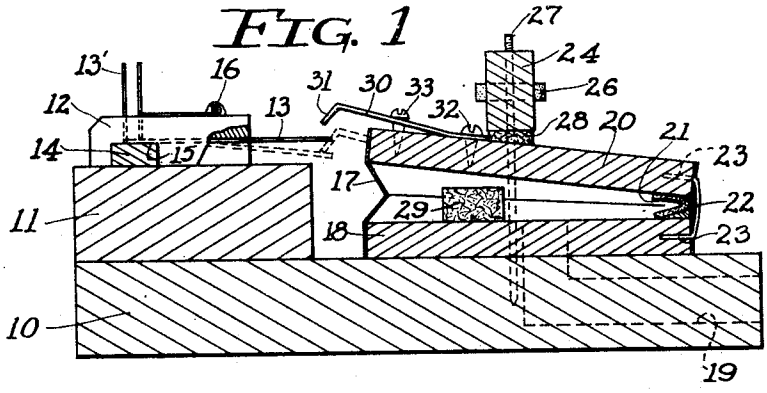

FIG. 2

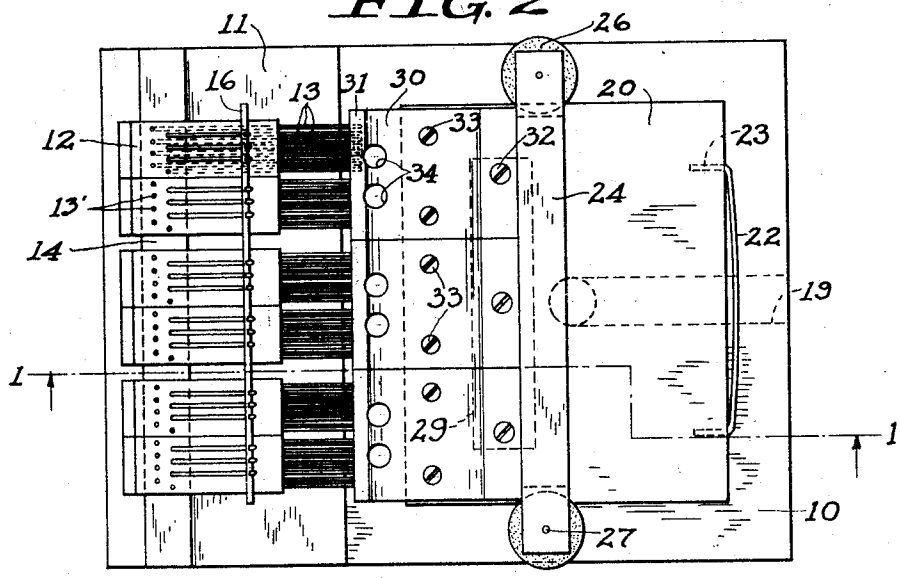

FIG. 3

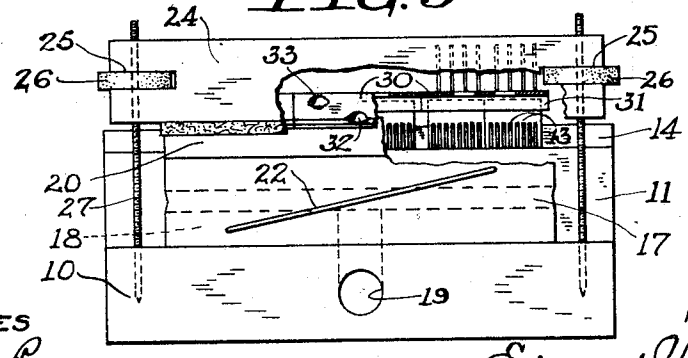

WITNESSES

Irving Rose

M. E. Downey

INVENTOR

Edmond Verlinden

By R. S. Caldwell

ATTORNEY

Patented Sept. 9, 1930

1,775,262

UNITED STATES PATENT OFFICE

EDMOND VERLINDEN, OF MILWAUKEE, WISCONSIN

PNEUMATIC SWITCH

Application filed August 22, 1928. Serial No. 301,306.

The invention relates to pneumatic switches.

An object of the invention is to provide a pneumatic switch adapted for use in organ building and including a pneumatic element spring-urged to one position and pneumatically displaced to another position, and carrying an adjustable contactor thereon by means of which the spring tension can be changed without altering the effective travel of the contactor, thereby permitting the use of relatively simple spring means.

Another object of the invention is to provide a switch in which the contactor is adjustably carried on a pneumatic element in such manner that the contactor may be warped with respect to the pneumatic element in order to compensate for slight inaccuracies in manufacture.

A further object of the invention is to provide a switch in which the pneumatic element carries a plurality of contactors capable of being individually warped to align their contact-forming edges.

A further object of the invention is to perfect details of construction generally.

The invention further consists in the several features hereinafter set forth and more particularly defined by the annexed claims.

In the accompanying drawings,

Fig. 1 is a transverse sectional elevation of a pneumatic relay switch embodying the invention;

Fig. 2 is a plan view of the switch, the line 1—1 thereon indicating a sectional plane of Fig. 1; and

Fig. 3 is an end view of the switch, parts being broken away and parts being shown in section.

In these drawings, the numeral 10 designates a base member having mounted thereabove, near one edge, a platform 11. A plurality of blocks 12 of wood or other suitable insulating material are secured to the upper surface of the block 11 to extend transversely thereof and are each longitudinally slotted from below to receive therein a plurality of resilient contact wires 13. The contact mounting blocks 12 are assembled in parallel relation by means of an aligning strip 14 carried on the platform 11 and entering notches 15 in the blocks where the aligning strip also serves to clamp the contact wires 13 in position. The contact wires 13 in each mounting block 12 are provided with upstanding terminal portions 13′ passing through the block, and one or more of these upstanding portions may be bent along the upper surface of the mounting block to receive a conductor wire 16. In the present instance, the conductor wire 16 is common to the several groups of contact wires, although obviously each group of contact wires may, if desired, be disposed in isolated circuit systems.

A bellows 17 has its lower leaf 18 secured to the base member 10 laterally adjacent the platform 11 and is capable of being placed under suction through a suitable duct 19, parts of which are formed in the base member 10. The upper leaf 20 of the bellows 17 has one edge portion pivotally connected to the lower leaf 18, as by means of a leather hinge 21, and has its opposite edge portion arranged adjacent and in parallel relation to the platform 11. A spring wire 22 under torsion extends angularly across the edges of the bellows leaves at the hinge 21 and is provided with laterally bent end portions 23, one of which is driven into the lower stationary leaf and the other of which is driven into the upper movable leaf in order to urge the latter leaf upwardly.

A stop bar 24 extends transversely above the upper leaf 20 of the bellows and is provided with horizontal slots 25 at its opposite ends to receive disk-like leather nuts 26. The nuts 26 are respectively threaded onto vertically disposed stems 27 which extend slidably through the end portions of the stop bar 24 and are secured in upstanding relation on the base member 10. A felt block 28 is secured on the lower face of the stop bar 24 and is engageable by the upper leaf 20 of the bellows to limit the upward movement of this leaf under urge of the spring wire 22. The rotation of the leather nuts 26 on the threaded stems 27 serves to vertically displace the stop bar 24, thereby adjustably limiting the upward travel of the upper bellows leaf.

In order to limit deflation of the bellows, a felt block 29 is secured within the bellows on the lower leaf 18 in position to be engaged by the lower face of the movable leaf 20. Preferably, the felt block is considerably shorter in length than the width of the bellows.

The movable leaf 20 of the bellows has mounted thereon a plurality of angle-shaped contactors 30 of resilient sheet metal, the forward depending edge portions 31 of which are engageable with the contact wires 13 upon the deflation of the bellows. Each contactor includes an end portion held in abutment with the upper face of the movable bellows leaf 20 by means of a screw 32, and the contactor is bent near the screw 32 to diverge it from the bellows leaf. The portion of the contactor free of the bellows leaf is secured thereto by screws 33 disposed near opposite side edges of the contactor, and these screws are adjustable to change the angle between the bellows leaf and contactor and also to warp the contactor with respect to the upper surface of the bellows leaf. Near its outer contact-forming edge the contactor is provided with openings 34 to assist the assembler in viewing the contact wires 13 during the assembling operation. The creased portion of each contactor adjacent the screw 32 serves as a fulcrum on which the contactor may be deflected by the screws 33 and, if desired, the contactor may rest on the bellows leaf along a line of contact at such creased portion.

Assuming that the tension of the spring wire 22 is to be increased, the stop bar 24 is depressed by means of the leather disk nuts 26, which thereby increases the spring tension, and the contactors 30 are then permitted to assume their proper position with respect to the contact wires 13 by backing off the screws 33. If the spring tension of the spring wire 22 is excessive, this can be rectified by elevating the stop bar 24 and depressing the contactors 30 to their proper position by means of the screws 33. In this manner the spring tension may be varied although employing a very simple type of spring, since the spring need not be directly manipulated.

The upper bellows leaf 20 may, through inaccuracy in manufacture, be slightly tilted in a transverse direction, which would ordinarily result in improper engagement of the contactors 30 with the spring wires 13. In order to remedy this condition it is only necesary to warp the contactors by mutual adjustment of the screws 33, and it is thus possible to accurately place the contacting edges of the contactors in parallel relation to the plane of the contact wires 13.

The use of a plurality of contactors facilitates manufacture and provides convenience in adjustment as well as permitting the use of independent circuit systems when these are required. If, through inaccuracies in manufacture or other reasons, the planes of the several groups of contact wires 13 are not coincident, this can be compensated for by depressing or elevating the several contactors 30 to different positions and, should it be desirable for one group of spring wires to be engaged before or after the others, this condition can also be readily effected. It is also possible to so warp a contactor that it will assume a non-parallel relation to its co-operating set of contacts, thereby permitting successive engagement of the contactor with its contacts to close successive circuits. This is useful in securing certain crescendo effects in organ playing.

The invention provides a pneumatic switch of durable and inexpensive construction in which the adjustment of spring tension can be conveniently effected when using a relatively simple type of spring means, and whereby proper contacting engagement of contact members can be readily secured notwithstanding slight inaccuracies in manufacture.

What I claim as new and desire to secure by Letters Patent is:

1. The combination of a bellows including a pivotally mounted movable leaf, a spring connected to said movable leaf for urging said leaf in one direction, adjustable stop means for limiting the movement of said movable leaf in said spring-urged direction and for changing the tension on said spring, a member carried on said movable leaf, adjustable fastening means for securing said member to said leaf to adjust the relative angular relation of said member to said leaf, and another member co-operating with said first-named member on the movement of said first-named member by said bellows, the adjustment of said stop means effecting a variation in spring tension by changing the limit position of said movable leaf and the angular adjustment of said leaf-carried member with respect to said movable leaf disposing said member in a selected position with respect to said second-named co-operating member, whereby an adjustment of spring tension can be made without directly manipulating said spring and without changing the selected relative position of said leaf-carried member with respect to its co-operating member.

2. The combination of a deflatable bellows including a pivotally mounted movable leaf, a spring connected to said movable leaf for urging said leaf in one direction, adjustable stop means for limiting the movement of said movable leaf in said spring-urged direction and for changing the tension on said spring, a contactor carried on said movable leaf, adjustable fastening means for securing said contactor to said leaf to adjust the relative angular relation of said contactor to said leaf, and a contact member engageable by said con-

tactor upon the deflation of said bellows, the adjustment of said stop means effecting a variation in spring tension by changing the limit position of said movable leaf disposing said contactor in a selected position with respect to said contact member, whereby the adjustment of spring tension can be made without directly manipulating said spring and without changing a selected relative position of said contactor with respect to said contact member.

3. The combination of a bellows including a movable leaf, a contact member, a contactor co-operating with said contact member and mounted on said movable leaf, and a pair of adjustable elements securing said contactor on said movable leaf near opposite side portions of said contactor for torsionally warping said contactor with respect to said movable leaf.

4. The combination of a bellows, a plurality of contact members, a resilient contactor co-operating with said contact members and mounted on said bellows, and means for torsionally warping said contactor with respect to said bellows to adjust the contact engagement of said contactor with said contact members.

5. The combination of a bellows, a plurality of contact members, a plurality of resilient contactors co-operating with said contact members and mounted on said bellows in laterally adjacent relation, and means for torsionally warping said contactors with respect to said bellows to align the contacting portions of said contactors and to adjust the contact engagement of said contactors with said contact members.

6. The combination of a bellows, a plurality of contact members, a plurality of resilent contactors co-operating with said contact members and mounted on said bellows, and means for independently torsionally warping said contactors with respect to said bellows to adjust the contact engagement of said contactors with said contact members.

7. The combination of a movable member, a contact member, a resilient contactor co-operating with said contact member and mounted on said movable member, and means for torsionally warping said contactor with respect to said movable member to adjust the contact engagement of said contactor with said contact member.

In testimony whereof, I affix my signature.

EDMOND VERLINDEN.