AU9212084

(12) PATENT ABRIDGMENT (11) Document No. AU-B-12084/92
(19) AUSTRALIAN PATENT OFFICE (10) Acceptance No. 653989

(54) Title
IMPROVEMENTS IN OR RELATING TO ELECTROSTATIC COATING OF SUBSTRATES OF MEDICINAL PRODUCTS

(51)[5] International Patent Classification(s)
B05B 005/08 **A61K 009/28** **B05D 001/06**

(21) Application No. : **12084/92** (22) Application Date : **21.02.92**

(87) PCT Publication Number : **WO92/14451**

(30) Priority Data

(31) Number	(32) Date	(33) Country
9103711	**22.02.91**	**GB UNITED KINGDOM**

(43) Publication Date : **15.09.92**

(44) Publication Date of Accepted Application : **20.10.94**

(71) Applicant(s)
HOECHST UK LIMITED

(72) Inventor(s)
JOHN NICHOLAS STANIFORTH; MARTIN PAUL GROSVENOR

(74) Attorney or Agent
DAVIES COLLISON CAVE , GPO Box 3876, SYDNEY NSW 2001

(56) Prior Art Documents
US 4495217

(57) Claim

1. A method of coating cores of pharmaceutical tablets with a dry powder, the method including the following steps:

feeding the cores onto a conveying means;

supplying the dry powder to a region through which the cores are to be conveyed on the conveying means;

conveying the cores on the conveying means through the region with the cores maintained at a different electric potential from the dry powder, whereby the dry powder is attracted to the exposed surfaces of the cores to form powder coatings thereon, and

subsequently melting the dry powder to convert the powder into fused film coatings secured to the cores.

3. A method according to claim 1 or 2, including the following further subsequent steps:

.../2

feeding the tablet cores onto a conveying means with the fused film coatings of the cores in contact with the conveying means and with that surface of the core that was in contact with the conveying means during the above-mentioned conveying step exposed;

supplying the dry powder with which the cores are to be coated to a region through which the conveying means passes;

conveying the cores on the conveying means through the region with the conveying means and/or the cores maintained at a different electric potential from the dry powder whereby the dry powder is attracted to the exposed surfaces of the cores, and

melting the dry powder coatings to convert the newly applied powder into fused film coatings secured to the cores.

OPI DATE 15/09/92 APPLN. ID 12084 / 92
AOJP DATE 29/10/92 PCT NUMBER PCT/GB92/00323

INTERNATIONAL APPLICATION PUBLISHED UNDER THE PATENT COOPERATION TREATY (PCT)

(51) International Patent Classification 5 : A61K 9/28, B05B 5/08 B05D 1/06

A1

(11) International Publication Number: WO 92/14451

(43) International Publication Date: 3 September 1992 (03.09.92)

(21) International Application Number: PCT/GB92/00323

(22) International Filing Date: 21 February 1992 (21.02.92)

(30) Priority data:
9103711.9 22 February 1991 (22.02.91) GB

(71) Applicant *(for all designated States except US)*: HOECHST UK LIMITED [GB/GB]; Hoechst House, Salisbury Road, Hounslow MK7 7AJ (GB).

(72) Inventors; and

(75) Inventors/Applicants *(for US only)* : STANIFORTH, John, Nicholas [GB/GB]; High Trees, 170 Bloomfield Road, Bath, Avon BA2 2AT (GB). GROSVENOR, Martin, Paul [GB/GB]; 23 Stirtingale Avenue, Bath, Avon BA2 2NQ (GB).

653989

(74) Agents: BARDO, Julian, Eason et al.; Abel & Imray, Northumberland House, 303-306 High Holborn, London WC1V 7LH (GB).

(81) Designated States: AT, AT (European patent), AU, BB, BE (European patent), BF (OAPI patent), BG, BJ (OAPI patent), BR, CA, CF (OAPI patent), CG (OAPI patent), CH, CH (European patent), CI (OAPI patent), CM (OAPI patent), CS, DE, DE (European patent), DK, DK (European patent), ES, ES (European patent), FI, FR (European patent), GA (OAPI patent), GB, GB (European patent), GN (OAPI patent), GR (European patent), HU, IT (European patent), JP, KP, KR, LK, LU, LU (European patent), MC (European patent), MG, ML (OAPI patent), MN, MR (OAPI patent), MW, NL, NL (European patent), NO, PL, RO, RU, SD, SE, SE (European patent), SN (OAPI patent), TD (OAPI patent), TG (OAPI patent), US.

Published

With international search report.

Before the expiration of the time limit for amending the claims and to be republished in the event of the receipt of amendments.

(54) Title: IMPROVEMENTS IN OR RELATING TO ELECTROSTATIC COATING OF SUBSTRATES OF MEDICINAL PRODUCTS

(57) Abstract

A method of coating substrates of medicinal products with a dry powder includes the following steps: feeding the medicinal substrates onto a conveying means (1); supplying the dry powder to a region (5) through which the substrates are to be conveyed; conveying the medicinal substrates on the conveying means (1) through the region (5) with the conveying means and/or the substrates maintained at a different electric potential from the dry powder, whereby the dry powder is attracted to the exposed surfaces of the substrates but is unable to reach the coated surfaces of the substrates in contact with the conveying means, and treating the dry powder coatings to convert the powder into a fused film secured to the substrates.

Improvements in or relating to Electrostatic Coating of Pharmaceutical Tablet Cores

The present invention relates to a method and apparatus for electrostatic coating of pharmaceutical tablet cores with a dry powder.

Proposals for electrostatic coating of tablets have been made for at least the last thirty years or so. For example, GB-1075404 (published in 1967) proposes an apparatus for coating tablets in which a liquid is sprayed onto one face of each tablet core as the tablet cores are conveyed below a first stage sprayer having an associated high voltage grid, the coating is dried, the coated cores are then conveyed below a second stage sprayer having an associated high voltage grid with the other side of the tablets uppermost, and then that coating is dried again.

Various paper proposals for electrostatically coating tablet cores with a liquid or a dry powder have been made but as yet at least in the case of pharmaceutical tablets there is no recognized electrostatic coating method or apparatus that has proved sufficiently successful to be applied commercially on a reasonable scale. While there are rotary tablet presses capable of producing pharmaceutical tablet cores continuously at a rate of for example 5,000 tablets per minute, the subsequent coating of the tablet cores is most commonly



carried out as a batch process by applying a liquid coating in a revolving drum.

In order to provide a commercially viable apparatus or method for coating tablet cores various problems must be overcome. It is in many ways easier to apply a liquid rather than a dry powder as the coating material and therefore, although both options have been considered in research, workers have favoured the use of liquids. If a dry powder is applied then it is harder to obtain adhesion of the coating to the core, which is not itself likely to be sufficiently electrically conducting, even when the powder is electrostatically charged. In order to provide a lasting bond between the core and the powder, the powder must be transformed into a film, for example by melting, but in the case of a tablet core, which in many cases will include organic materials, this must not be damaged. Furthermore an even coating is required and it is very difficult to obtain an even coating of powder on an electrically insulating tablet core, even when the powder is electrostatically charged.

When liquid coating is used, the coating must be dried. Theoretically such drying could in some circumstances be carried out at room temperature but in commercial practice it is important, for example because of the rate at which the process must be carried out, to heat the tablets and that is expensive because of the large input of energy required to vapourize the solvent used in the liquid coating. Another disadvantage of

AUSTRALIA 15 PATENT OFFICE

liquid coating is that it cannot be used for coating materials that are not soluble or suitably dispersible in a usable liquid, preferably water.

It is an object of the invention to provide an improved method and apparatus for coating cores of pharmaceutical tablets.

According to the invention there is provided a method of coating cores of pharmaceutical tablets with a dry powder, the method including the following steps:

feeding the cores onto a conveying means;

supplying the dry powder to a region through which the cores are to be conveyed on the conveying means;

conveying the core on the conveying means through the region with the cores maintained at a different electric potential from the dry powder, whereby the dry powder is attracted to the exposed surfaces of the cores, and

subsequently melting the dry powder to convert the powder into fused film coatings secured to the cores.

By placing the cores on a conveying means during the charging process, it is found that a satisfactory spread of powder over the core can be obtained. It is also found that some unevenness of distribution is not necessarily serious, even if it is important for the final tablet to have a coating of substantially constant thickness, because further levelling can take place when the powder is converted into a fused film. Thus the present invention enables a desired thickness of coating

AUSTRALIA PATENT OFFICE

to be applied uniformly over a surface of a tablet core. The thickness of the coating will typically be greater than 10 μm. Although the present invention as defined above still involves the input of energy to convert the powder into a fused film, the amount of energy required can be substantially less than that involved in the case where a liquid coating comprising a coating substance dissolved in a suitable solvent is applied and the solvent has to be vapourised after application of the coating. The method also removes the necessity for solvent handling and disposal and for batch processing.

While reference is made throughout the specification to "tablets" and the invention is of particular application to pharmaceutical tablets of conventional shape, it should be understood that the term is to be interpreted in a broad sense as covering also, for example, pellets, capsules or spherules.

While the method of the invention will generally be applied to the coating of tablet cores which have not received any coating since being formed in a press, it may be used to apply a coating on top of an already coated or partly coated tablet core.

The method of the present invention may be carried out as a continuous process. In practice there are considerable advantages in being able to operate the coating process continuously rather than as a batch process.

While there are certain applications, which will be referred to later, where it will be desired to coat the

AUSTRALIAN PATENT OFFICE

tablet core on one side only or with at least one discontinuity in the coating, it will generally be desirable to coat all of the exterior of the tablet core. Accordingly the method preferably comprises the following further subsequent steps:

feeding the tablet cores onto a conveying means with the fused film coatings of the cores in contact with the conveying means and with that surface of the core that was in contact with the conveying means during the above-mentioned conveying step exposed;

supplying the dry powder with which the cores are to be coated to a region through which the conveying means passes;

conveying the cores on the conveying means through the region with the conveying means and/or the cores maintained at a different electric potential from the dry powder whereby the dry powder is attracted to the exposed surfaces of the cores, and

melting the dry powder coatings to convert the newly applied powder into fused film coatings secured to the cores.

For practical convenience the conveying means used during the second coating stage is preferably not the one used during the first coating stage but it is possible to use the same conveying means for both coating stages. The powder applied during each coating stage will usually be the same but it is of course possible to apply different powders at each stage; similarly the same

AUSTRALIA PATENT OFFICE

thickness of coating will usually be applied at each stage but different thicknesses may be applied, if desired.

If desired still further coating stages may be employed for example to apply powder to sides of the products, if the sides have not already been coated.

Preferably the conveying means comprises a conveyor belt. The conveying means may however comprise an inclined static surface or a vibrated surface along which the cores slide. The friction between the cores and the inclined surface may be reduced by passing air through the inclined surface from the underside.

Converting the powder into a fused film may advantageously comprise converting the powder into the liquid phase after which it returns to the solid phase.

We have found that the conversion of the dry powder into a fused film not only serves to secure the coating to the core but also provides a means by which the distribution of the coating material over the core may be made more even. In some cases the coating material may have such a low viscosity when fused that the coating will distribute itself evenly over a core but in most cases the coating material will be more viscous and the method therefore preferably includes the further mechanical treatment of the coating to even out the depth of the coating over the surface of the core. The evening out step may be carried out by passing the cores under a vibrating plate or a rotating roller, the plate or roller

PATENT OFFICE

contacting and evening out the coating on the core. Alternatively the evening out step may be carried out by passing the cores under a jet of air, for example an air knife, the curtain of air generated as the air knife evening out the coating on the core; the air may be heated in order to avoid premature solidifying of the coating.

The dry powder coating is converted into a fused film by heating, preferably by infra red radiation, but other forms of electromagnetic radiation may be used. Usually the change in the coating upon heating will simply be a physical change from a powder to a liquid and then, on cooling, to a continuous solid coating, but there are other possibilities: for example, the powder coating may comprise a polymer which is cured during the treating step, for example by irradiation with energy in the gamma, ultra violet or radio frequency bands, to form a continuous cross-linked polymer coating.

It is preferable to charge the powder to an appropriate electric potential, which may be positive or negative. The powder is preferably charged as it is supplied to the region through which the conveying means passes. The charging may be carried out using a corona charging apparatus; another possibility is to charge the powder triboelectrically. One or more electrodes maintained at a selected potential which would normally be of the same sign as that of the powder (i.e. a positive potential if the powder is positively charged

AUSTRALIAN PATENT OFFICE 15

and a negative potential if the powder is negatively charged) are preferably provided above the conveying means in the region to which the powder is supplied. The positioning of the electrodes and the potential(s) at which they are maintained influences the electric field in the region and therefore the path of the powder through the region.

The conveying means is preferably maintained at a potential which is either earth potential or of opposite sign to the potential to which the powder is charged. The conveying means may have an electrically conducting upper surface on which the tablet cores rest. In most cases the cores will be made of an electrically insulating material; they may be treated prior to application of the powder to make them more electrically conducting, for example by moistening the exterior of the core. Such moistening facilitates the maintenance of the exterior of the core at earth potential and thus facilitates the application of the powder to the core.

The method of the invention is not restricted to the use of any particular form of coating material. On the other hand, for good results, the dry powder preferably has the following physical properties:

(1) A particle size in the range of 1 μm to 1000 μm and preferably in the range of 30 μm to 80 μm; a small particle size enables the powder to be evenly dispersed in the region to which it is supplied and through which the conveyor belt

AUSTRALIAN PATENT OFFICE

passes.

(2) A relatively high resistivity in the range of 10^6 Ωm to 10^{24} Ωm and preferably in the range of 10^{10} Ωm to 10^{14} Ωm; a high resistivity facilitates maintenance of the powder charge but makes it harder to charge the powder.

(3) A viscosity when in the liquid phase of less than 500 Pas and preferably less than 75 Pas; a low viscosity facilitates even spreading of the coating over the surface of the tablet core.

(4) After conversion to a fused film, a tensile strength of more than 0.5 N/m^2 and preferably more than 3.5 N/m^2; a reasonably strong and tough coating is required in order to protect the tablet during subsequent handling up to the administration of the tablet.

(5) A melting point which lies in the range of 50°C to 180°C and preferably 60°C to 100°C. With a relatively low melting point less energy is required to convert the powder into the liquid phase and the risk of damage to the tablet core from heating is reduced. The latter point is of special importance when the drug in the tablet core is liable to be damaged if its temperature is increased substantially above room temperature.

Examples of materials which, alone or when blended with other materials, meet some or all of the five preferred properties listed above can be found in: polyamides, polyalkenes, waxes, oils, polyesters, sugar alcohols, sugars, polyoxyethylenes and ethylene vinyl acetate copolymer. Examples of suitable sugar alcohols are: sorbitol and xylitol. Examples of suitable sugars are sucrose and lactose. A polyester having properties especially suitable for the method of the invention is polycaprolactone.

The materials indicated above may be modified by blending other materials with them so as to improve their

physical properties to match more closely the properties indicated above. One or more opacifiers, for example titanium dioxide, and/or colourants, for example aluminium lakes or dyes, may also be added to the formulation of the coating material.

The materials listed above fall into two categories: the water soluble materials (polyoxyethylenes, sugars, sugar alcohols) and the poorly soluble or insoluble polymeric materials. If a coating is required to dissolve quickly following administration, then a water soluble material will generally be preferred whereas if a delayed, controlled or modulated release of the drug is required a poorly soluble or insoluble polymeric material is likely to be advantageous.

An especially preferred sugar alcohol is xylitol, while an especially preferred polymeric material is a polyester, such as, for example polycaprolactone. In both cases, however, it may be desirable to add small quantities of other substances to improve the physical properties of the material.

The invention may be used to apply a coating of controlled thickness and may be employed for a pharmaceutical tablet containing a drug that is to be instantaneously released when administered or that is to be the subject of controlled or modulated release, such control or modulation being achieved from the nature of the coating and/or from the nature of the core. Where the desired form of release is to be achieved by character-

AUSTRALIA PATENT OFFICE

istics of the coating, it may be preferred to leave one portion of the product uncoated or coated with a different material. In the case of a tablet having faces at opposite ends connected by a cylindrical side wall, the portion that is uncoated or coated with a different material may be one of the faces of the tablet, a small portion of one of the faces or a side wall of the tablet.

As has already been made clear, the methods described above have the advantage that they can be carried out continuously. They can therefore be employed as part of a continuous process for producing coated cores of pharmaceutical tablets.

The present invention also provides a continuous process for producing coated tablets comprising the steps of:

continuously forming pharmaceutical tablet cores on a rotary press, and

continuously coating the tablet cores by a method as defined above.

The present invention also provides an apparatus for carrying out a method of coating pharmaceutical tablet cores as defined above, the apparatus including:

a conveying means,

means for feeding the cores onto the conveying means,

a feed for supplying dry powder to a region through which the conveying means passes,

electric charging means for electrically charging

AUSTRALIA 15 PATENT OFFICE

the powder and/or the conveying means and/or the cores such that the potential of the powder supplied to the region through which the conveying means passes is different from the potential of the cores on the conveying means, whereby the powder is attracted to the exposed surfaces of the cores to form coatings thereon, and

means for subsequently melting the dry powder attracted to the cores to convert the powder into fused film coatings secured to the cores.

The apparatus may further include a rotary press, wherein the feeding means is operative to feed the cores from the press onto the conveying means.

The present invention also provides a pharmaceutical tablet when coated by a method as described above.

The invention also provides the use of a dry powder having a melting point which lies in the range of 50°C to 180°C in a method as herein described.

The invention additionally provides the use of a dry powder consisting wholly or substantially of one or more of the materials in the group comprising polyamides, polyalkenes, waxes, oils, polyesters, polyoxyethylenes, sugars, sugar alcohols and ethylene vinyl acetate copolymer in a method as herein described.

A method and apparatus for electrostatic coating of tablet cores will now be described by way of example with reference to the accompanying drawings of which:

Fig. 1 is a schematic side view of an apparatus for coating tablets on one face,

AUSTRALIA 15 PATENT OFFICE

Fig. 2 is a block diagram of a continuous process for manufacturing coated tablets employing the apparatus of Fig. 1, and

Fig. 3 is a side view of a coated tablet.

The apparatus shown in Fig. 1 includes a conveyor belt 1 which is guided around three idler rollers 2 and a drive roller 3 driven by a motor 4 in the direction shown by an arrow in Fig. 1. A booth 5 is provided enclosing most of the upper run of the conveyor belt 1.

Apparatus for feeding tablet cores to the upstream end (the left hand end as seen in Fig. 1) of the conveyor belt 1 outside the booth 5 is provided, but is not shown in the drawing. The form of such apparatus is not part of the present invention. A feed for supplying dry powder to the interior of the booth above the conveyor belt is also provided. In the example of the invention illustrated the feed comprises an electrostatic powder gun 6 employing a single fixed corona electrode 7 mounted at the end of the gun barrel 8 and connected to a voltage supply 9. A mixture of powder and air is fed to the gun barrel from a venturi powder feed 10.

Suspended from the top of the booth is an electrode 11 which is rectangular in plan view and extends across the whole width of the conveyor belt 1 and a portion of its length. The electrode 11 is connected to a voltage supply 12. Immediately below and supporting the conveyor belt 1 in the region below the electrode 11 is another rectangular electrode 18 which is connected to earth.

AUSTRALIA PATENT OFFICE

The conveyor belt 1 is made of a laminate of polyvinyl-chloride and aluminium foil with the aluminium foil forming the outer layers of the belt and the belt is connected to earth.

An infra red heater 13 and a vibrating plate 14 are provided over the downstream end of the conveyor belt.

In use of the apparatus, pharmaceutical tablet cores are fed onto the upstream end of the belt 1 by a feed and pass along the conveyor with one face of the core resting on the belt and the other facing upwards. Dry powder with which the tablet cores are to be coated is sprayed into the booth 5 by the spray gun 6 which charges the powder to a suitable potential (for this example it will be assumed that the powder is charged to a positive potential). Powder sprayed from the gun 6 enters the region between the electrode 11, which is maintained at a positive potential, and the conveyor belt 1 and electrode 18 both of which are earthed. Thus powder is directed downwardly away from the electrode 11 towards the conveyor belt 1 and the electrode 18. A

coating of powder is therefore laid over the conveyor belt and the tablet cores on the conveyor belt.

The tablet cores are then passed under the infra red heater 13 which heats the coating of powder on the tablets sufficiently to cause the coating to melt and form a film coating over the upper side of the tablet core. As the tablets are carried beyond the heater 13 they are contacted by the vibrating plate 14 which evens out the coating. Thereafter, the film coating solidifies.

In order to provide a coating on the other side of the tablet core (if one is desired), the tablets are laid the other way up on a further conveyor arrangement similar to that shown in Fig. 1 and the process described above with respect to Fig. 1 is repeated. Apparatus for transferring tablets from one conveyor to another and for turning them over in the course of the transfer is already known (see for example Figs. 2 and 3 of GB 1 075 404).

Referring now to Fig. 2, it will be seen that with the apparatus and method just described a continuous production of coated tablets can be provided. Tablet cores produced for example from a high speed rotary press are fed directly to the apparatus of Fig. 1 where their upper faces are coated with electrically charged dry powder. The dry powder coating is then melted by heating, the partially coated tablets allowed to cool and fed to another apparatus of the kind shown in Fig. 1 but with their uncoated faces now uppermost. Those uncoated

faces are coated with electrically charged dry powder, the dry powder coating is melted by heating and the coated tablet allowed to cool and then fed to appropriate packaging machinery. Such a process can operate continously.

Fig. 3 shows a tablet having an upper face 15, a lower face 16, and a cylindrical side wall 17. In the first coating stage, one of the faces, say the face 15, is coated fully and the side wall 17 receives some powder coating but not a full coating. In the second coating stage the other face 16 is coated fully and the remainder of the coating to the side walls 17 is applied.

Claims:

1. A method of coating cores of pharmaceutical tablets with a dry powder, the method including the following steps:

feeding the cores onto a conveying means;

supplying the dry powder to a region through which the cores are to be conveyed on the conveying means;

conveying the cores on the conveying means through the region with the cores maintained at a different electric potential from the dry powder, whereby the dry powder is attracted to the exposed surfaces of the cores to form powder coatings thereon, and

subsequently melting the dry powder to convert the powder into fused film coatings secured to the cores.

2. A method according to claim 1, in which the method is carried out as a continuous process.

3. A method according to claim 1 or 2, including the following further subsequent steps:

feeding the tablet cores onto a conveying means with the fused film coatings of the cores in contact with the conveying means and with that surface of the core that was in contact with the conveying means during the above-mentioned conveying step exposed;

supplying the dry powder with which the cores are to be coated to a region through which the conveying means passes;

conveying the cores on the conveying means through

AUSTRALIA 45 PATENT OFFICE

the region with the conveying means and/or the cores maintained at a different electric potential from the dry powder whereby the dry powder is attracted to the exposed surfaces of the cores, and

melting the dry powder coatings to convert the newly applied powder into fused film coatings secured to the cores.

4. A method according to claim 3, in which the conveying means used during the second coating stage is not the one used during the first coating stage.

5. A method according to any preceding claim, in which the conveying means comprises a conveyor belt.

6. A method according to any preceding claim including a further mechanical treatment of the coating to even out the depth of the coating over the surface of the core.

7. A method according to claim 6, in which the evening out step is carried out by passing the cores under a vibrating plate or a rotating roller, the plate or roller contacting and evening out the coating on the core.

8. A method according to claim 6, in which the evening out step is carried out by passing the cores under a jet of air.

9. A method according to any preceding claim, in which the powder is electrically charged.

10. A method according to claim 9, in which the powder is charged as it is supplied to the region through

PATENT OFFICE

which the conveying means passes.

11. A method according to claim 9 or 10, in which the charging is carried out using a corona charging apparatus.

12. A method according to any preceding claim, in which one or more electrodes maintained at a selected potential are provided above the conveying means in the region to which the powder is supplied.

13. A method according to any preceding claim, in which the powder has a particle size in the range of 1 μm to 1000 μm.

14. A method according to any preceding claim, in which the powder has a relatively high resistivity in the range of 10^6 to 10^{24} Ωm.

15. A method according to any preceding claim, in which the powder has a viscosity when in the liquid phase of less than 500 Pas.

16. A method according to any preceding claim, in which the powder has, after returning to the solid phase, a tensile strength of more than 0.5 N/m^2.

17. A method according to any preceding claim, in which the powder has a melting point which lies in the range of 50°C to 180°C.

18. A method according to claim 17, in which the powder has a melting point in the range of 60°C to 100°C.

19. A method according to any preceding claim, in which the dry powder consists wholly or substantially of one or more of the materials in the group comprising:

PATENT OFFICE

polyamides, polyalkenes, waxes, oils, polyesters, polyoxyethylenes, sugars, sugar alcohols and ethylene vinyl acetate copolymer.

20. A method according to claim 19, in which the dry powder consists wholly or substantially of xylitol.

21. A method according to claim 19 in which the dry powder consists wholly or substantially of polycaprolactone.

22. A method according to any preceding claim, in which the tablet cores are treated prior to application of the powder to make them more electrically conducting.

23. A method according to claim 22, in which the treatment comprises moistening the exterior of the tablet cores.

24. A continuous process for producing coated tablets comprising the steps of:

continuously forming pharmaceutical tablet cores on a rotary press, and

continuously coating the tablet cores by a method according to any preceding claim.

25. An apparatus for carrying out a method according to claims 1 to 23, the apparatus including:

a conveying means,

means for feeding the cores onto the conveying means,

a feed for supplying dry powder to a region through which the conveying means passes,

electric charging means for electrically charging

AUSTRALIA 4/5 PATENT OFFICE

the powder and/or the conveying means and/or the cores such that the potential of the powder supplied to the region through which the conveying means passes is different from the potential of the cores on the conveying means, whereby the powder is attracted to the exposed surfaces of the cores to form coatings thereon, and

means for subsequently melting the dry powder attracted to the cores to convert the powder into fused film coatings secured to the cores.

26. An apparatus according to claim 25, the apparatus further including a rotary press, wherein the feeding means is operative to feed the cores from the press onto the conveying means.

27. An apparatus according to claim 25 or 26, wherein the conveying means comprises an inclined static surface.

28. A pharmaceutical tablet when coated by a method according to any one of claims 1 to 24.

29. The use of a dry powder having a melting point which lies in the range of 50°C to 180°C in a method as claimed in any of claims 1 to 23.

30. The use of a dry powder consisting wholly or substantially of one or more of the materials in the group comprising polyamides, polyalkenes, waxes, oils, polyesters, polyoxyethylenes, sugars, sugar alcohols and ethylene vinyl acetate copolymer in a method as claimed in any of claims 1 to 23.

31. The use according to claim 30 of a dry powder



consisting wholly or substantially of ethylene vinyl acetate copolymer.

32. The use according to claim 30 of a dry powder consisting wholly or substantially of a sugar alcohol selected from sorbitol and xylitol.

33. A method of coating cores of pharmaceutical tablets with a dry powder substantially as hereinbefore described with reference to the accompanying drawings.

34. An apparatus for carrying out a method of coating cores of pharmaceutical tablets with a dry powder substantially as hereinbefore described with reference to the accompanying drawings.

35. A pharmaceutical tablet when coated by a method of coating cores of pharmaceutical tablets with a dry powder substantially as hereinbefore described with reference to the accompanying drawings.

DATED this 24th day of August, 1994

HOECHST UK LIMITED
By Its Patent Attorneys
Davies Collison Cave

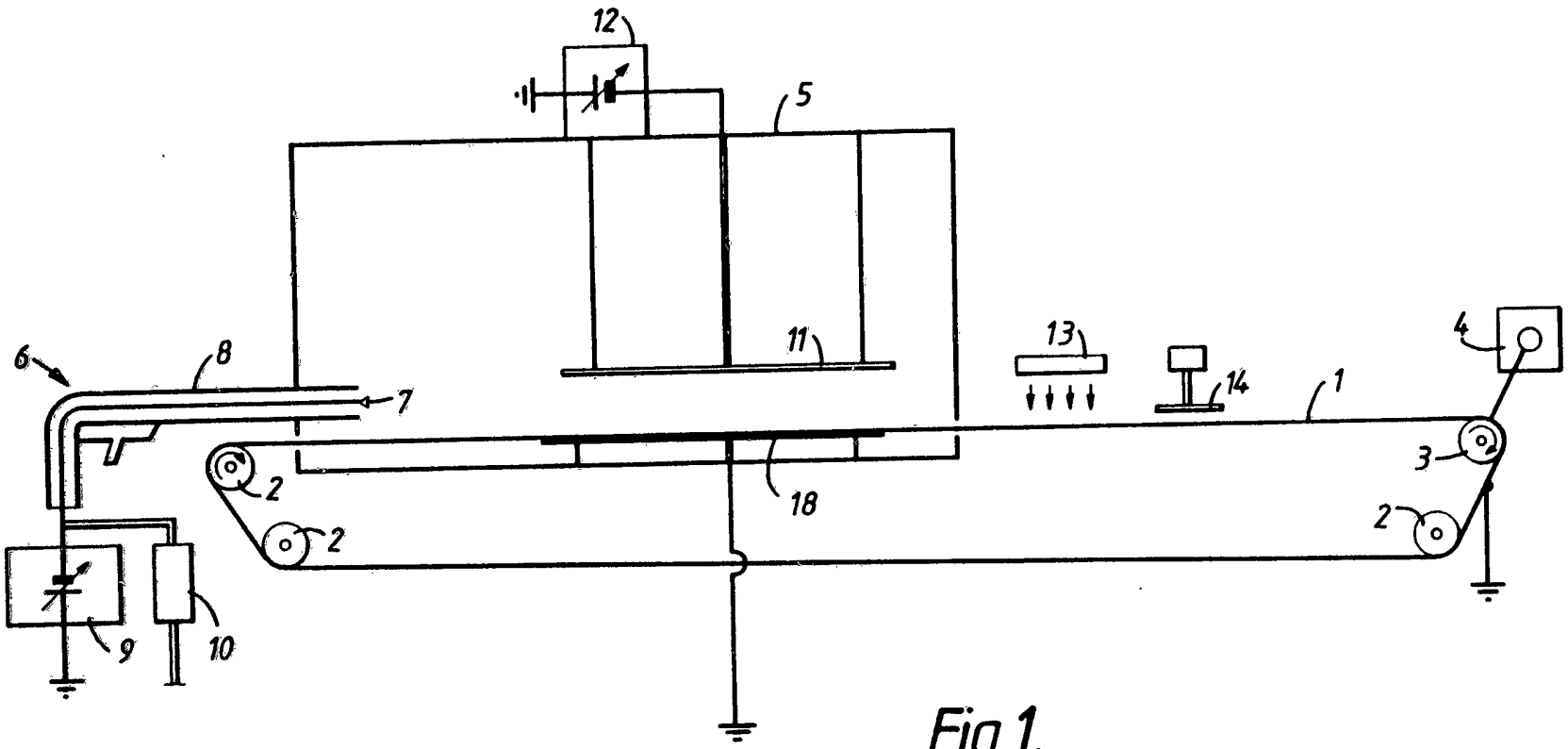

Fig.1.

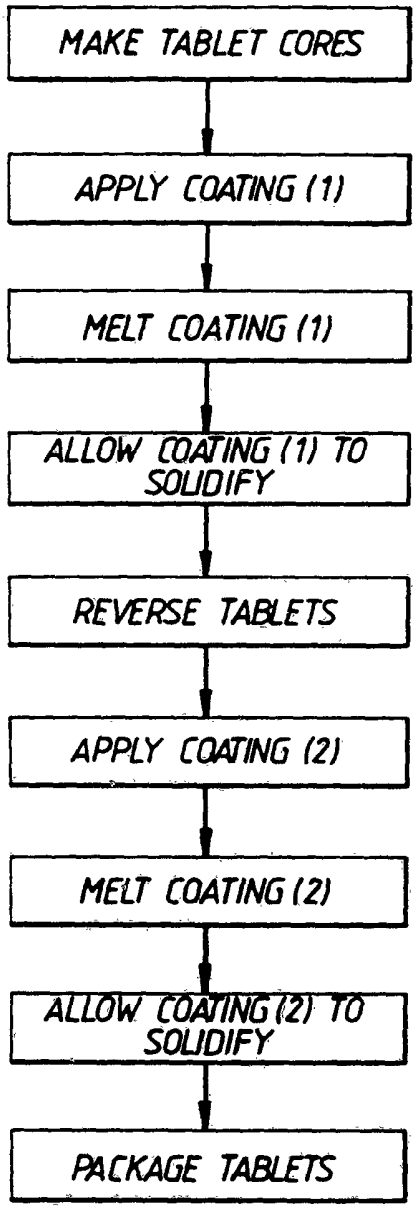
MAKE TABLET CORES
APPLY COATING (1)
MELT COATING (1)
ALLOW COATING (1) TO SOLIDIFY
REVERSE TABLETS
APPLY COATING (2)
MELT COATING (2)
ALLOW COATING (2) TO SOLIDIFY
PACKAGE TABLETS

Fig.2.

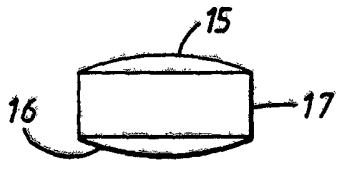
15
16
17

Fig.3.

INTERNATIONAL SEARCH REPORT

International Application No PCT/GB 92/00323

I. CLASSIFICATION OF SUBJECT MATTER (if several classification symbols apply, indicate all)[6]

According to International Patent Classification (IPC) or to both National Classification and IPC

Int.Cl. 5 A61K9/28; B05B5/08; B05D1/06

II. FIELDS SEARCHED

Minimum Documentation Searched[7]

Classification System	Classification Symbols
Int.Cl. 5	B05D ; B05B ; B05C ; A61K

Documentation Searched other than Minimum Documentation to the Extent that such Documents are Included in the Fields Searched[8]

III. DOCUMENTS CONSIDERED TO BE RELEVANT[9]

Category °	Citation of Document,[11] with indication, where appropriate, of the relevant passages[12]	Relevant to Claim No.[13]
X	US,A,4 495 217 (SCHRUM T.S.) 22 January 1985 see the whole document ---	1-5, 9-11,13, 22-27
Y		12
Y	US,A,4 774 102 (KIEFER S.L. ET AL) 27 September 1988 see column 8, line 15 - line 55 ---	12
X	BE,A,649 491 (TANABE SEIYAKU CO,LTD) 16 October 1964 cited in the application & GB,A,1075404 see the whole document ---	1-5, 9-11,13, 22-27
A	BE,A,522 840 (UNILEVER N.V.) 15 October 1953 see page 1, line 1 - line 10 ---	6,7

-/--

° Special categories of cited documents :[10]

"A" document defining the general state of the art which is not considered to be of particular relevance

"E" earlier document but published on or after the international filing date

"L" document which may throw doubts on priority claim(s) or which is cited to establish the publication date of another citation or other special reason (as specified)

"O" document referring to an oral disclosure, use, exhibition or other means

"P" document published prior to the international filing date but later than the priority date claimed

"T" later document published after the international filing date or priority date and not in conflict with the application but cited to understand the principle or theory underlying the invention

"X" document of particular relevance; the claimed invention cannot be considered novel or cannot be considered to involve an inventive step

"Y" document of particular relevance; the claimed invention cannot be considered to involve an inventive step when the document is combined with one or more other such documents, such combination being obvious to a person skilled in the art.

"&" document member of the same patent family

IV. CERTIFICATION

Date of the Actual Completion of the International Search	Date of Mailing of this International Search Report
01 JUNE 1992	22. 06. 92
International Searching Authority	**Signature of Authorized Officer**
EUROPEAN PATENT OFFICE	Raulais

III. DOCUMENTS CONSIDERED TO BE RELEVANT (CONTINUED FROM THE SECOND SHEET)

Category °	Citation of Document, with indication, where appropriate, of the relevant passages	Relevant to Claim No.
A	GB,A,1 449 993 (AMERICAN CAN COMPANY) 15 September 1976 see claims	6,7
A	EP,A,0 381 044 (HOECHST A.G.) 8 August 1990	
A	EP,A,0 405 884 (THE PROCTER & GAMBLE COMPANY) 2 January 1991	
A	DE,A,2 636 152 (PFRIMMER J. & CO) 6 October 1977 see column 2, line 23 - line 42 see column 4; example 1	19,20
A	EP,A,0 085 149 (ELECTROSTATIC DEPOSITION TECHNOLOGIES) 10 August 1983	

ANNEX TO THE INTERNATIONAL SEARCH REPORT ON INTERNATIONAL PATENT APPLICATION NO. GB 9200323 SA 56848

This annex lists the patent family members relating to the patent documents cited in the above-mentioned international search report. The members are as contained in the European Patent Office EDP file on
The European Patent Office is in no way liable for these particulars which are merely given for the purpose of information. 01/06/92

Patent document cited in search report	Publication date	Patent family member(s)		Publication date
US-A-4495217	22-01-85	None		
US-A-4774102	27-09-88	CA-A-	1262081	03-10-89
		US-A-	4779564	25-10-88
BE-A-649491	16-10-64	CH-A-	409246	
		DE-B-	1204776	
		FR-A-	1533164	
		GB-A-	1075404	
		NL-A-	6406815	21-12-64
BE-A-522840		None		
GB-A-1449993	15-09-76	AU-A-	7082274	22-01-76
		CA-A-	1035637	01-08-78
		JP-C-	1174940	28-10-83
		JP-A-	50060389	24-05-75
		JP-B-	58010151	24-02-83
EP-A-0381044	08-08-90	DE-A-	3903235	09-08-90
		US-A-	5024819	18-06-91
EP-A-0405884	02-01-91	US-A-	5000978	19-03-91
		AU-A-	5796790	03-01-91
		CA-A-	2018982	29-12-90
		CN-A-	1048885	30-01-91
		JP-A-	3137200	11-06-91
DE-A-2636152	06-10-77	AT-B-	352884	10-10-79
		AU-B-	510921	17-07-80
		AU-A-	2768777	15-02-79
		BE-A-	857659	01-12-77
		CA-A-	1086650	30-09-80
		CH-A-	630259	15-06-82
		FR-A,B	2361105	10-03-78
		GB-A-	1547527	20-06-79
		JP-C-	1134821	14-02-83
		JP-A-	53020416	24-02-78
		JP-B-	57025007	27-05-82
		NL-A-	7708808	14-02-78