Feb. 8, 1944. J. F. McDONALD ET AL 2,341,224

TWO-WAY RADIO TELEPHONE SYSTEM

Filed Oct. 31, 1940 7 Sheets-Sheet 1

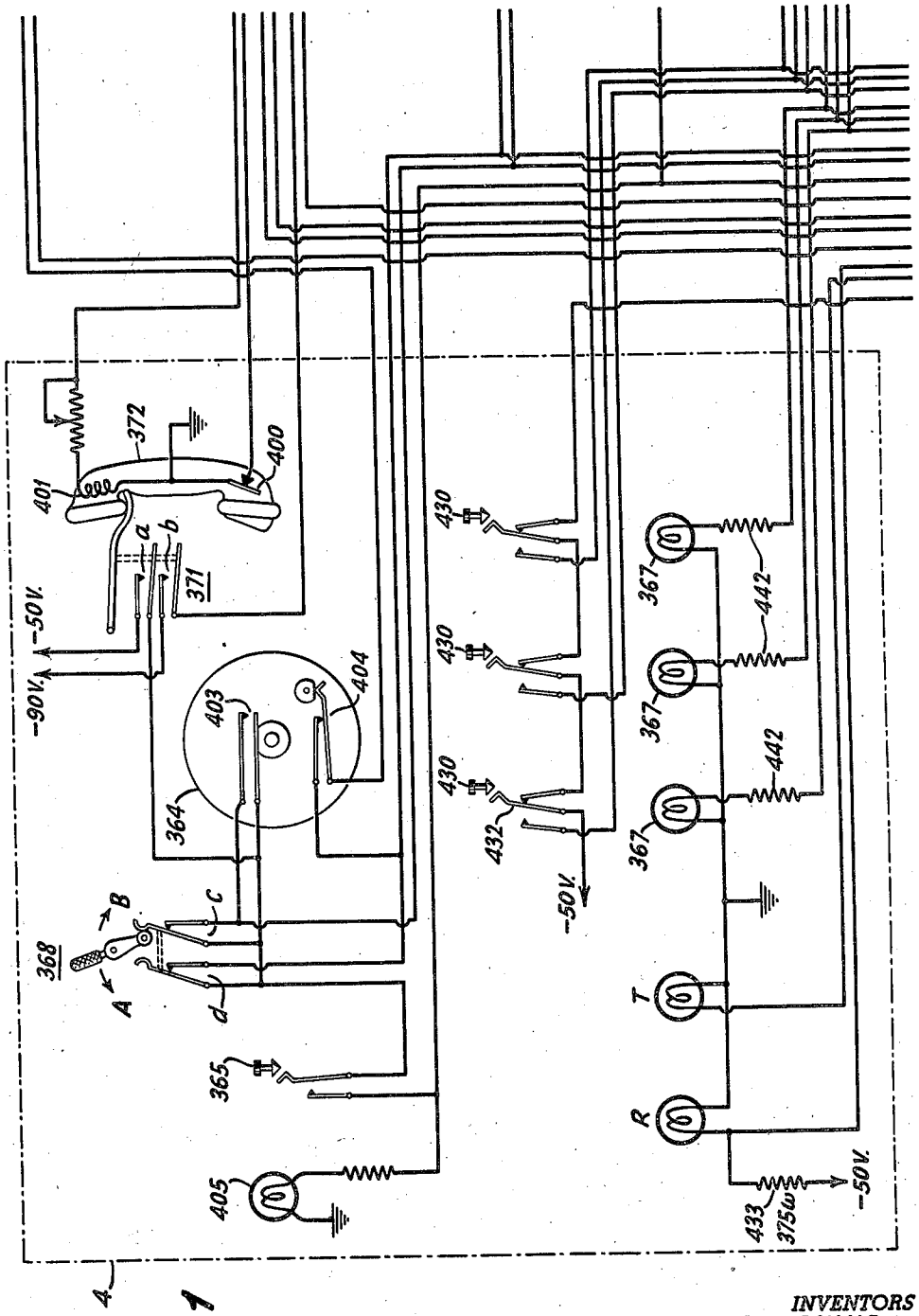

Fig. 1

BY

INVENTORS
JOSEPH F. McDONALD AND
HERSCHEL B. MARTIN
H. G. Grover
ATTORNEY

Feb. 8, 1944. J. F. McDONALD ET AL 2,341,224

TWO-WAY RADIO TELEPHONE SYSTEM

Filed Oct. 31, 1940 7 Sheets-Sheet 2

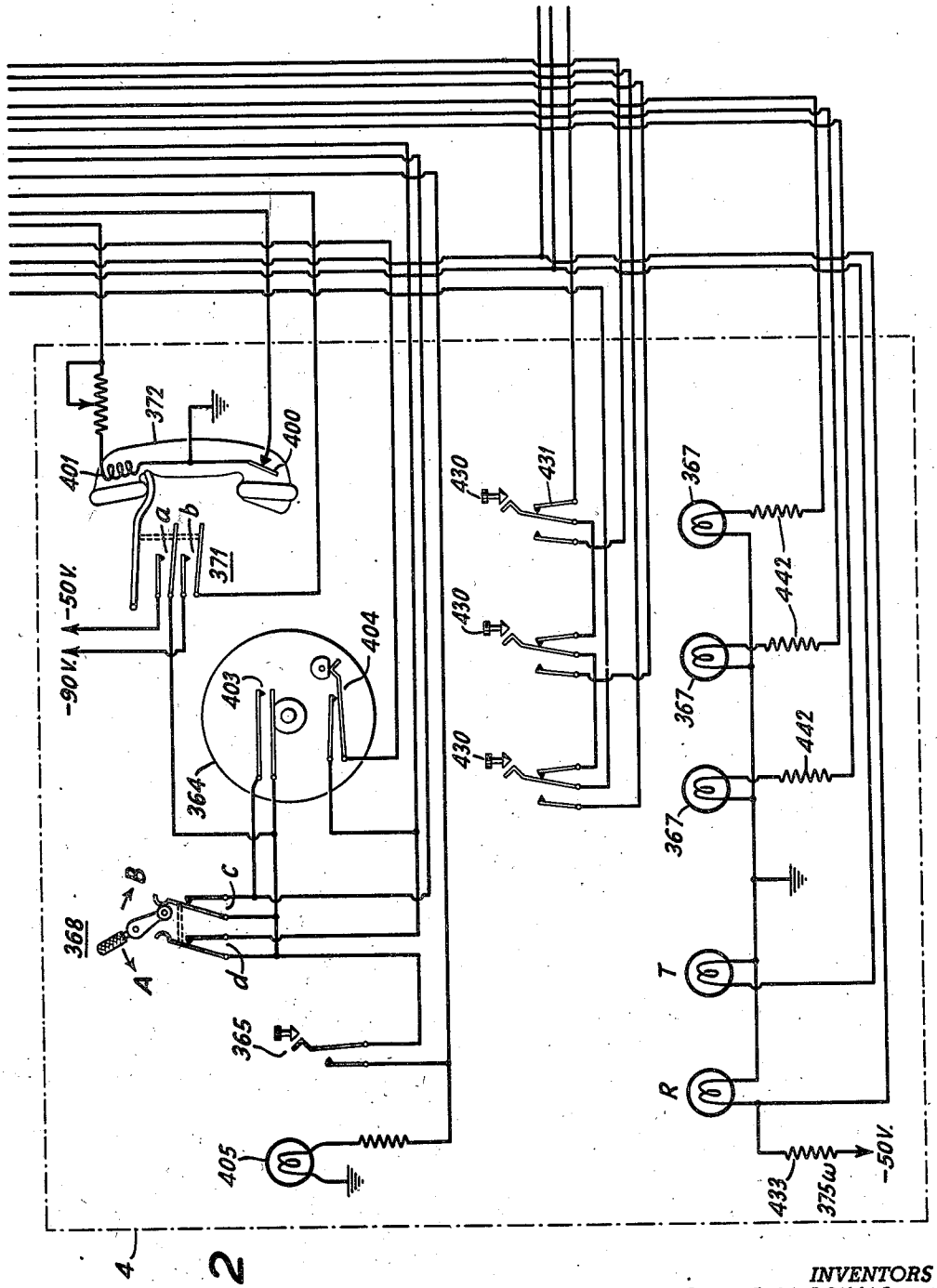

Fig. 2

BY

INVENTORS
JOSEPH F. McDONALD AND
HERSCHEL B. MARTIN
H. S. Grover
ATTORNEY

Feb. 8, 1944. J. F. McDONALD ET AL 2,341,224

TWO-WAY RADIO TELEPHONE SYSTEM

Filed Oct. 31, 1940 7 Sheets-Sheet 3

Fig. 3

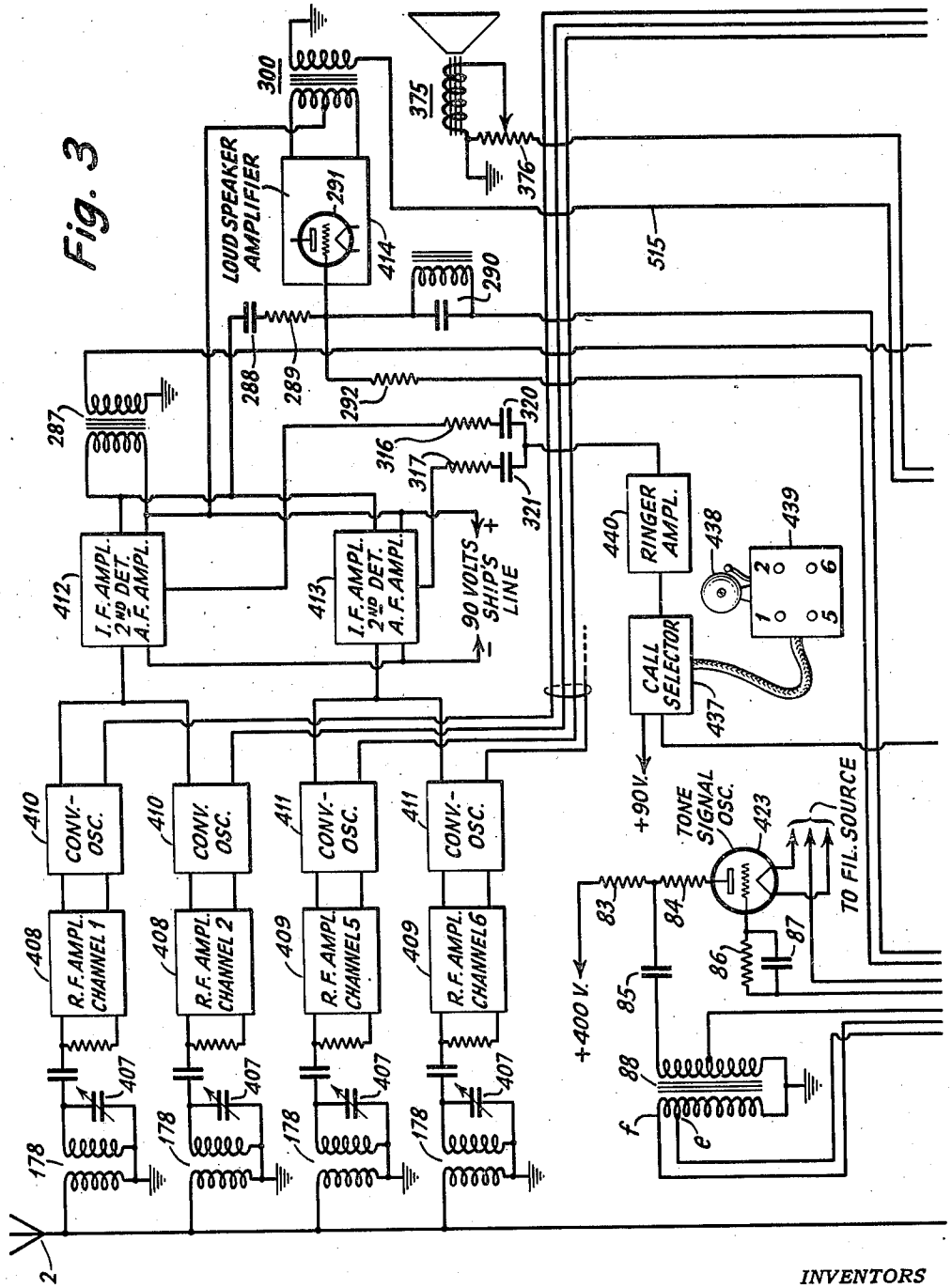

INVENTORS
JOSEPH F. McDONALD AND
HERSCHEL B. MARTIN

BY

W. S. Grover
ATTORNEY.

Feb. 8, 1944. J. F. McDONALD ET AL 2,341,224

TWO-WAY RADIO TELEPHONE SYSTEM

Filed Oct. 31, 1940 7 Sheets-Sheet 4

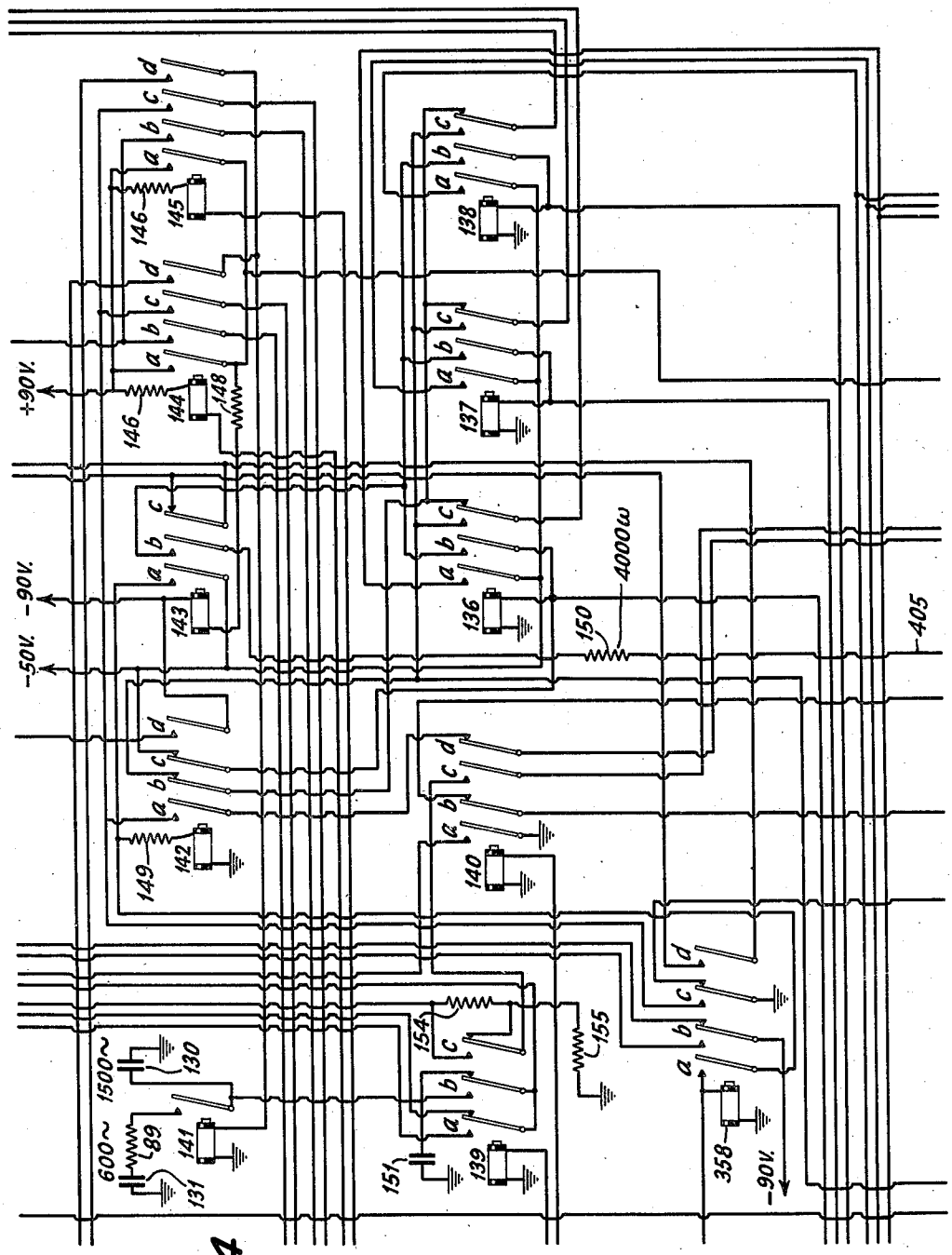

Fig. 4

INVENTORS
JOSEPH F. McDONALD AND
HERSCHEL B. MARTIN

BY H. S. Grover
ATTORNEY

Feb. 8, 1944. J. F. McDONALD ET AL 2,341,224

TWO-WAY RADIO TELEPHONE SYSTEM

Filed Oct. 31, 1940 7 Sheets-Sheet 5

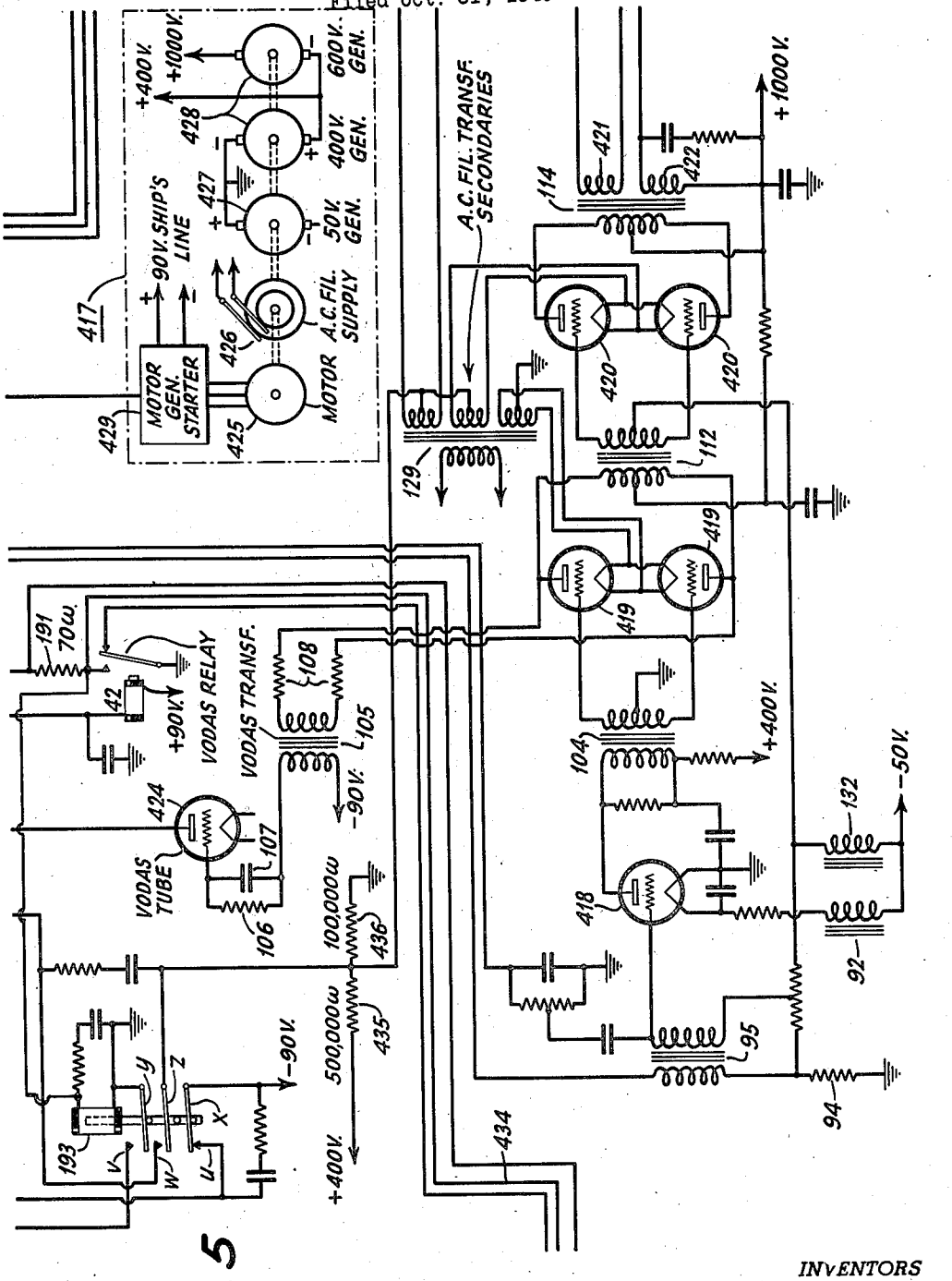

Fig. 5

INVENTORS
JOSEPH F. McDONALD AND
HERSCHEL B. MARTIN

BY

ATTORNEY

Feb. 8, 1944. J. F. McDONALD ET AL 2,341,224

TWO-WAY RADIO TELEPHONE SYSTEM

Filed Oct. 31, 1940 7 Sheets-Sheet 6

Fig. 6

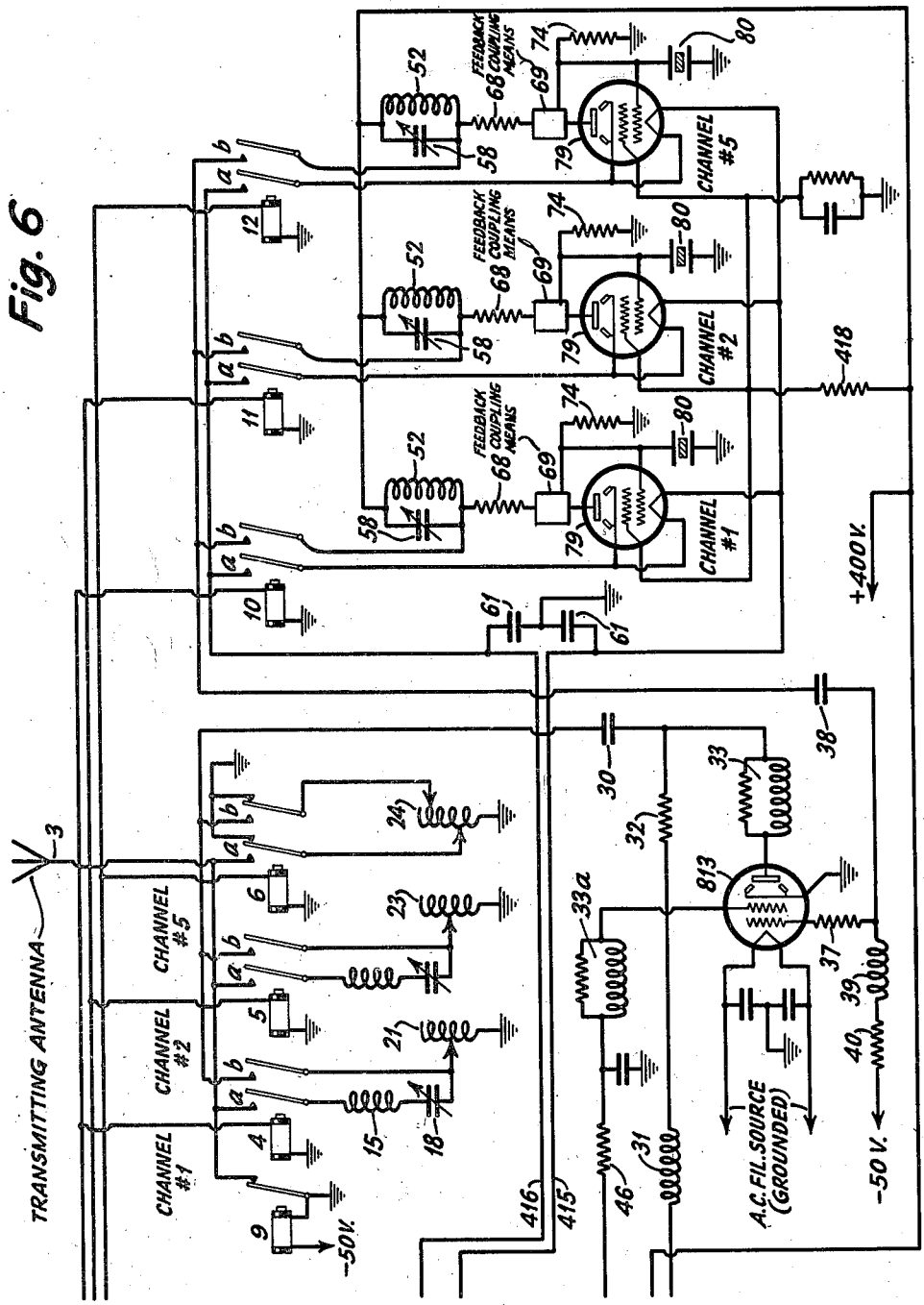

INVENTORS
JOSEPH F. McDONALD AND
HERSCHEL B. MARTIN

BY

ATTORNEY

TWO-WAY RADIO TELEPHONE SYSTEM

Filed Oct. 31, 1940 7 Sheets-Sheet 7

Fig. 8

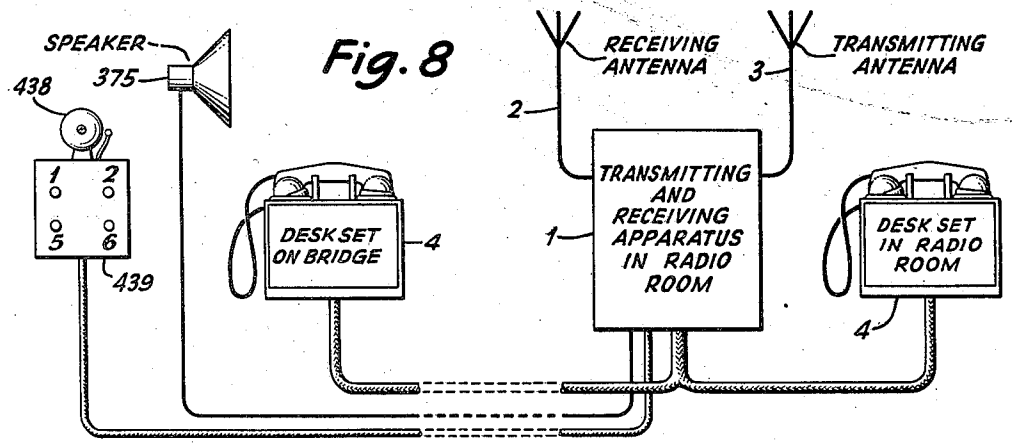

Fig. 9

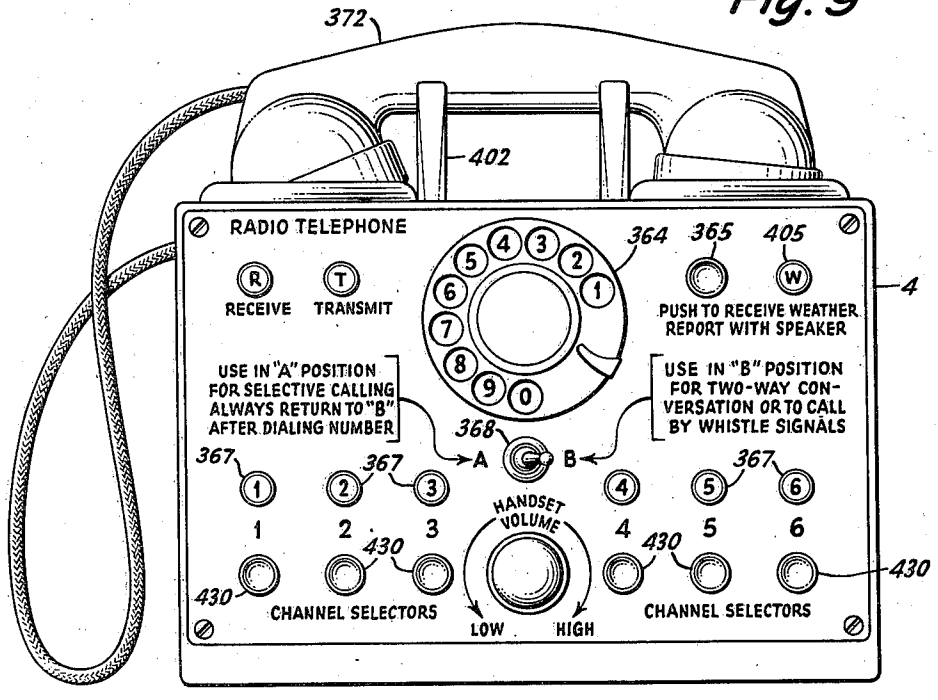

Fig. 7

	Fig. 3	
Fig. 1	Fig. 4	
Fig. 2	Fig. 5	Fig. 6

BY

INVENTORS
JOSEPH F. McDONALD AND
HERSCHEL B. MARTIN
H. S. Grover
ATTORNEY

Patented Feb. 8, 1944

2,341,224

UNITED STATES PATENT OFFICE

2,341,224

TWO-WAY RADIO TELEPHONE SYSTEM

Joseph F. McDonald, New York, and Herschel B. Martin, Brooklyn, N. Y., assignors to Radio Corporation of America, a corporation of Delaware

Application October 31, 1940, Serial No. 363,628

15 Claims. (Cl. 250—9)

This invention relates to two-way radio telephone systems. The apparatus herein shown and described has many novel features, the construction being such as to attain certain specific objects, the more important ones of which are as follows:

It is an object of our invention to provide a two-way radio telephone system having transmitting and receiving equipment which is adapted to operate on a selected choice of any predetermined number of radio frequency channels. During conversation, the transmitter and the receiver at a given station may be automatically tuned to the same or different radio frequencies.

Another object is to provide a convenient control unit having a hand-set which includes both microphone and earphone. The control unit is to be provided with a cradle for the hand-set and its cabinet should house or support suitable indicator lamps and push buttons, a volume control device for the earphone, a toggle switch and a selector dial for making selective calls to another station.

It is another object of our invention to provide radio telephone equipment having a plurality of receiving channels, all of which may be normally maintained in operation for the reception of incoming calls, and to provide means for deadening the receiving circuits on all but one channel, this channel being selected for reception of incoming speech signals.

It is another object of our invention to provide radio telephone equipment suitable for the transmission of outgoing calls on any selected one of a plurality of transmitting channels either by two-tone selective code signals, or by a special low frequency tone signal corresponding to "whistle" signals, or by voice signals.

It is another object of our invention to provide an automatic control of the transmitting and receiving circuits for alternate use thereof, as when transmitting and receiving speech signals. In carrying out this object we preferably provide a speech-responsive relay for short-circuiting the receiving antenna and for impressing a modulated carrier wave on the transmitting antenna. This feature is such that when the microphone ceases to pick up voice signals the receiving circuits are automatically restored to operative condition and the carrier of the transmitter is removed from the transmitting antenna.

It is another object of our invention to provide for the convenient reception of weather reports through a loud-speaker connected to any one or more of the receiving circuits or through a hand-set connected to the same receiving circuits.

It is a further object of our invention to provide radio telephone transmitting equipment which shall be powered by a motor generator, this generator being automatically started up in response to the lifting of a hand-set off its cradle.

It is a further object of our invention to provide for the alternative control of receiving and transmitting telephone equipment from either of two remote points such as may conveniently include, for example, the radio operator's cabin and the ship's bridge.

It is a further object of our invention to provide a radio telephone system which is equipped with suitable channel indicating pilot lamps for showing selected channels on which transmission and reception is to be carried on.

It is another object of our invention to provide a station selector dial for initiating call signals, and a convenient call indicator having indicator lights which will identify the channel of an incoming call, this equipment being inclusive also of a selective bell ringer and channel indicator so that when a particular telephone station is called only its particular bell will respond, while the bell ringer at other stations having different appropriate call signals will be unresponsive. At the called station the channel indicator is arranged to be actuated by the call selector so as to notify the called party as to the intended channel to be used.

In carrying out our invention we, of course, make use of structural parts and assemblies which to a large extent are well known in the art. The novel features of our invention, however, will be best appreciated by reference to the claims which follow a detailed description of a typical embodiment. This typical embodiment will now be described under various captions, although it should be borne in mind that cooperation between the elements mentioned under different captions is essential to the convenient and expeditious use of the system as a whole.

In the accompanying drawings we have illustrated the invention by means of different figures as follows:

Figures 1 to 6, inclusive, are fragmentary circuit diagrams which should be fitted together in accordance with the layout diagram of Figure 7 in order to show comprehensively the entire system;

Figure 8 shows schematically the different components of a complete transmitting and receiving

equipment such as may be installed on shipboard or at a land station; and

Figure 9 shows in a front elevation view one of the control units for remote control of the transmitting and receiving equipment; for carrying out all of the operations of selective call signalling; and for arranging to carry on a two-way telephone conversation on any selected radio channel or channels.

In describing our invention it is to be understood that the circuits for a number of different relays will need to be described and where the contact pairs or contact groups of these relays are referred to they will be indicated by the letters *a*, *b*, *c* and *d*, following the reference number for the relay itself. The contact pair nearest the relay coil will invariably be referenced *a*, and succeeding contact pairs or groups will be given the letters *b*, *c* and *d*. Furthermore, it should be generally observed that our receiving system is designed to operate under standby conditions, so that it is necessary to provide a permanent source such as the ship's power line for operation of the receivers and also for certain relay operations incident to the making of a call. On the other hand, in the carrying out of our invention it is provided that a motor generator shall be started up automatically upon lifting either one of two hand-sets off its cradle; and the motor generator then provides the necessary auxiliary voltages for operation of certain relays as well as for the power supply to the code signalling and voice transmitting tubes. The motor generator is automatically shut down upon restoring the hand-set to its cradle.

The general arrangement of operating units

Referring to Figure 8, we show therein a cabinet **1**, which houses both transmitting and receiving apparatus, located preferably in the radio room of a ship or in another convenient location. The receiving antenna **2** and the transmitting antenna **3** are suitably connected to appropriate apparatus within this cabinet, all as will be better understood upon reaching a detailed description of the circuits. Two control units **4** are shown connected to the transmitting and receiving equipment within the cabinet **1**, each of these units being provided with a telephone hand-set and with suitable push-buttons, pilot lights and calling dial, all as more clearly pictured in Figure 9. Figure 8 also shows an annunciator box **439** which houses a bell ringer and a number of pilot lights for showing the channel on which an incoming call is to be responded to. These pilot lights are selected and the bell is rung in accordance with the operation of an automatic selector mounted within the apparatus cabinet **1**, the selector being rendered responsive normally to a number of different receiving channels which are maintained in a standby condition. The bell **438** is shown mounted on the outside of the box **439** and its operation will be hereinafter described. The loud-speaker **375** is also shown connected to an output transformer **300** (Figure 3) within the cabinet **1**.

The control unit

One of the control units is illustrated in Figure 9 and a circuit diagram thereof appears duplicated in Figures 1 and 2. The reason for this duplication is that, while it is presumed that two control units may be placed at separate points and wired therefrom to the cabinet which contains the transmitting and receiving apparatus, it is necessary to indicate wherein certain of the circuits are in parallel and where at least one of these circuits forms a series connection from one control unit to the other.

The hand-set **372** comprises a microphone **400** and an earphone **401**. When not in use the hand set rests in a cradle **402** having control of a double-pole single-throw switch **371** which comprises contact pairs *a* and *b*. A toggle switch **368** is also provided for the purpose of actuating two pairs of contact springs *c* and *d*. A call selector dial **364** is provided with one pair of off-normal springs **403** and a pair of impulsing springs **404**. Pilot lamps **367** are provided to indicate the particular channel which is selected for a conversation. In the circuit diagram only three of these pilot lamps have been shown at each control unit, whereas in practice it has been found convenient to provide selectivity with respect to any one of six communicating channels. The principles of operation, however, are well illustrated in the circuit diagram by means of the alternative arrangements shown in respect to three channels.

A speech responsive relay will presently be described, the operation of which is indicated by pilot lamps designated R and T on the control unit. When the microphone does not receive speech waves the pilot lamp R normally remains lighted to indicate that the system is in readiness for reception. In response to speech waves in the microphone, however, a relay **42** (Figure 5) releases and a "break-in" relay **193** operates for the purpose of impressing a carrier wave on the transmitting antenna; for short-circuiting the receiving antenna; and for causing the pilot lamp T to light up while simultaneously extinguishing the pilot lamp R. This operation is entirely automatic as will hereinafter be shown.

For the reception of weather reports with the aid of a loud-speaker a push-button **365** may be momentarily depressed and thereafter a pilot lamp **405** will light up to indicate that the necessary conditions have been established for rendering the loud-speaker responsive to a selected communication channel. This condition will persist until the hand-set **372** is replaced in its cradle.

A toggle switch **368** is used in its two positions A and B in accordance with the legends applied to these letters on the panel of the control unit. That is to say, the switch is thrown to the A-position for selective calling as by the use of the dial selector. The switch is thrown to the B-position after dialing, so as to establish the proper conditions for two-way conversation or to call by means of "whistle signals."

The two separately located control units are identical in construction, but the series connection from the negative side of the D. C. motor generator source **427** (Figure 5) may be traced from the movable contact **432** on the left hand button **430** of the control unit shown in Figure 1 to the back contact of the right hand push-button **430** in this control unit, thence to the movable contact appropriate to the left hand push-button **430** in the control unit of Figure 2. The back contact **431** of the right hand push-button **430** in the control unit of Figure 2 is in circuit with a conductor **405** interconnecting two resistors **191** and **150**, the purpose of which will be set forth under the caption "Vodas relay system" and will also be mentioned in connection with the description of operation of certain other relays.

Channel arrangement

This two-way radio system is adapted for operation in accordance with regulations imposed by the Federal Communications Commission of the United States. Certain channels are available for ship-to-shore communications. Other channels are available for ship-to-ship communications. One particular channel is available in the Great Lakes region, for example, as a calling channel and for distress signals, and should not be used except in cases of necessity.

In accordance with these requirements the control units and the circuit arrangements of our system are designed to operate automatically on the calling frequency "5" without stopping to depress the channel selector button **430** (indicated in Figure 9 as #5 button). The means for rendering the receiving and transmitting channels operative at this calling frequency will hereinafter be described.

The receiver circuits

Referring to Figure 3, we show the general scheme of the receiving circuits. The receiving antenna **2** has connected thereto a plurality of primary coils of different antenna transformers **178**. The primary terminals remote from the antenna are grounded. One terminal of each secondary of these transformers is also grounded. The secondaries are tuned by means of the usual variable capacitors **407**. A connection from the receiving antenna **2** is also made to a relay contact *v* appropriate to relay **193** (Figure 5). This relay operates as will hereinafter be shown in response to speech currents, and when the movable contact *y* closes with its companion *v* the receiving antenna is grounded.

The receiving apparatus comprises a number of different radio frequency amplifier circuits each tuned to a different frequency. These are indicated by blocks **408** and **409**. Individually these R. F. amplifiers are designated as tuned to channels 1, 2, 5 and 6, respectively. Corresponding amplifiers may be provided for channels 3 and 4, but for the sake of simplicity these have not been indicated. Each R. F. amplifier is in circuit with a converter oscillator unit **410** or **411**. The oscillators of units **410** are tuned to different frequencies so as to obtain the same intermediate frequency from either channel 1 or channel 2. This intermediate frequency is then fed to an I. F. amplifier, second detector, and an A. F. amplifier **412**. Similarly, the outputs from the converter oscillator units **411** are fed to a common input circuit for a corresponding I. F. amplifier which is represented in combination with a second detector and A. F. amplifier in the block **413**.

For receiving a conversation at the earphone the amplified speech currents from either of the units **412** or **413** is impressed across a transformer **287** to an earphone circuit, the two ends of which are grounded. This circuit may be traced from the secondary of transformer **287** through contacts *b* of either one of the relays **144** or **145** and thence to the earphone **401** of the hand-set **372** which happens to be in use.

A loud-speaker **375** is provided especially for the reception of weather reports and when so used the output from either of the audio frequency amplifiers included in the units **412** and **413** is coupled across capacitor **288** and resistor **289** to the input circuit of a loud-speaker amplifier **414**. The last stage of amplification in this unit **414** is a push-pull arrangement so that the output transformer **300** has a primary which is center-tapped, this center-tap being fed with +90 volts from the ship's D. C. line. The secondary of this transformer **300** is grounded at one terminal, while the other terminal connects through a conductor **515** which may be traced through relay contacts **358***d* (Figure 4) and thence to a volume control rheostat **376** leading to the voice coil of loud-speaker **375**. As will be seen, both ends of this loud-speaker circuit are grounded and hence the loud-speaker itself responds only to the currents which are induced across the transformer **300**.

When neither relay **143** nor relay **358** is actuated the loud-speaker circuit is nevertheless completed through relay contacts **143***c*. This is the "stand-by" condition for the reception of incoming calls by voice or by "whistle signals." When using the hand-set, however, relay **143** will be actuated, as will be hereinafter shown, and hence with relay **358** unenergized the loud-speaker circuit will be opened and no response will be obtained therefrom.

Crystal oscillator circuits

Three of the oscillator circuits for respectively different transmitting channels are shown illustratively in Figure 6. Each of the transmitting channels uses a separate oscillator circuit comprising a discharge tube **79**, a piezo-electric crystal **80**, and a tuned plate circuit which includes an inductance **52**, and a variable capacitor **58**. The refinements of the circuit arrangement include also a resistor **68** interconnecting the tuned circuits **52—58** and the anode of the tube **79**. The control grid of this tube is connected to one electrode of the piezo-electric crystal **80** and also to a feed-back coupling means **69**. The feedback coupling means is indicated in Fig. 6 by means of blocks in order to imply that any suitable feedback coupling device may be employed whether inductive or capacitive. For example, as taught in a Patent #2,085,444, granted June 29, 1937, to L. M. Perkins, the oscillator control grid may be connected to an open-ended coil which constitutes a capacitive coupling means if disposed in close proximity to the conductor of the anode circuit. Inductive coupling on the other hand would be provided if the anode circuit for the oscillator tube were to include the primary winding of a transformer, the secondary winding of which would be connected between ground and the control grid of the oscillator tube **79**. Applicants, therefore, make no claim to any specific form of feedback coupling means. A grounded grid leak resistor **74** provides self-biasing of the control grid with respect to the cathode.

Filament heating potential is supplied by a center-tapped secondary on transformer **129**, this transformer being energized by alternating current from the motor generator **417** (Figure 5). The center-tap on the filament transformer winding for the oscillator tubes is grounded through contacts *w—z* of relay **193** when the latter is energized in response to speech currents from the microphone. The terminals of this transformer winding are connected with the conductors **415** and **416**. High frequency potentials are shunted around the filament transformer secondary by means of grounded capacitors **61**. Conductor **415** is connected to each tube filament at one end thereof, while conductor **416** connects to front contacts *a* of relays **10**, **11** and **12**. These relays are selectively actuated for energizing the

filaments of the oscillator tubes in accordance with the channel to be used.

A 400 volt D. C. source from the motor generator 417 is lead through resistor 419 to the screen grids of the tubes 79, and also through the inductances 52 of the tuned anode circuits to each of the anodes of these tubes.

The relays 10, 11 and 12 are each provided with a second pair of contacts *b* for connecting the selected oscillator tank circuit across a coupling condenser 38 to the control grid of a power amplifier tube 813. This tube is, therefore, caused to deliver a carrier wave under control of the selected oscillator circuit.

Power amplifier circuit

The power amplifier tube 813 is connectible to a tank and antenna loading circuit by means of relays 4, 5 and 6, which are operated in dependence upon the channel to be used. The coils of these relays are connected in parallel with corresponding relays 10, 11 and 12 in a selector circuit which is controlled by the push buttons on the control units. The tanks and loading coils are preadjusted to the frequencies at which the transmitter is to be operated. These tuning elements are indicated illustratively as including inductance 15 and capacitor 18 in circuit with the transmitting antenna 3. Other elements included in the circuit arrangement are shown as variable inductances 21, 23 and 24 which are provided with movable taps connecting through contacts *b* of the respective channel relays 4, 5 and 6 to the coupling condenser 30 across which the amplified carrier wave is fed from the anode of the power amplifier tube 813. The parallel inductance and resistance unit 33 is provided for the purpose of choking parasitic oscillations.

The filament of the tube 813 is fed from its own secondary winding on the A. C. filament transformer 129. This secondary winding is not shown in the drawing (Figure 5) since it would unduly crowd the diagram and furthermore would be shown as having a grounded center tap the same as another secondary which is so represented. In fact, the transformer 129 may have as many as six independent secondary windings each having a specific filament circuit to be independently controlled or to have its center tap either grounded or connected to the negative terminal of an independent power source. The control grid of the tube 813 is biased by means of a −50 volt lead to the motor generator 417. A choke coil 39 and a resistor 40 are introduced into this lead for filtering purposes, while the resistor 37 having a value of preferably 15 ohms or thereabouts makes for smoother application of the oscillator voltage to the control grid.

Since the channels are tuned to widely different frequencies, it is preferable that the tuning arrangements for different channels be somewhat modified. Thus the low frequency transmitting channels including channel 5 use an auto transformer coupling arrangement 24 between the antenna circuit and the power amplifier anode. The tuning arrangements for channels 1 and 2, however, use tuned power amplifier tank circuits which are either inductively or capacitively coupled to the antenna, depending upon the particular installation.

Relay 9 is provided in order that the antenna 3 may be automatically grounded when the transmitter is shut down; that is to say, when the motor generator 417 is stopped. This relay 9 is, therefore, energized by direct connection of its winding across the 50 volt leads from the motor generator 417, and remains energized as long as the generator runs.

Voice modulation circuits

Voice modulation is accomplished as follows: The microphone 400 on either of the hand-sets is connected to one of the contacts *c* of relay 144 or 145. As will hereinafter be shown, one of these relays is energized upon lifting a hand-set off its cradle. The front contacts *c* of relays 144 and 145 are connected to front contact *a* of relay 142. This relay is also closed when using the hand-set. Following this circuit further, from the movable contact *a* on relay 142 it is shown traversing contacts *d* of relay 140 and thence to the primary winding of transformer 95 (Figure 5). The other terminal of this transformer primary is grounded through resistor 94. The secondary of the transformer 95 is included in the input circuit of a class A amplifier tube 418. The output circuit of this tube includes the primary of transformer 104. This transformer has a grounded center-tapped secondary and the two terminals of its secondary winding are connected respectively to the grids of a push-pull amplifier system comprising two amplifier triodes 419. A stage of class B amplification of the voice modulation currents is obtained by inductive coupling across the transformer 112 to the grids of the push-pull amplifier tubes 420. The output transformer 114 has its primary connected to the anodes of the tubes 420, and this transformer has two secondaries 421 and 422. The secondary winding 421 feeds modulation currents across resistor 46 and the inductive and resistive unit 33*a* to the screen grid in the power amplifier tube 813. The secondary winding 422 modulates the anode of the power amplifier tube, the circuit therefor including a choke 31 and a resistor 32.

Tone signalling oscillator circuit

In order to transmit a two-tone signal for calling another station, the dial 364 on the control unit is used. This dial has a pair of off-normal contacts 403 by means of which a relay 140 is actuated during the times of impulsing a code signal as by means of the impulsing contacts 404. The circuit for relay 140 may be traced as follows:

From ground, which is the positive terminal of the 50 volt motor generator source 417 (Figure 5), current transverses the relay winding and thence through contacts 403 and contacts *a* of the hand-set cradle switch 371 to the −50 volt terminal of the motor generator. Depending upon the digits of the calling code number to be transmitted, that is to say, depending upon the manner in which the dial 364 is manipulated, a predetermined series of impulses will be produced by the impulsing contacts 404, thereby causing relay 141 to respond impulsively. The circuit for this purpose may be traced as follows:

From the grounded +50 volt motor generator supply, current traverses the winding of relay 141 and thence through contacts *d* of one of the relays 144 or 145, depending upon which hand-set has been lifted. Assuming that it is the hand-set shown in Figure 1, this will be the circuit through relay 144*d* and thence to the impulsing contacts 404, one of which is connected to contacts *d* of the toggle switch 368, these contacts being closed when the switch is in the A-position. Therefore, the circuit is completed through contacts *a* of the hand-set cradle switch

371 to the minus terminal of the 50 volt generator source.

The functions of relay 140, termed a "dialing relay" are as follows, it being understood that for dialing a call-selector number this relay remains energized during the entire time, while for dialing "whistle signals" it is energized by dot-and-dash impulsing in accordance with the closing of the off-normal springs 403 of the dial:

Contacts 140*a* place ground on the center-tap of a filament transformer secondary which is not shown, but is one of a plurality of similar secondaries all wound on transformer 129, this particular secondary being used exclusively as the filament source for a tone frequency oscillator tube 423. This grounding of the secondary enables tube 423 to draw current.

Contacts 140*b* open in order to disconnect the circuit between the anode of a speech responsive tube 424 and its associated relay 42. When this relay de-energizes a short-circuiting ground is removed from the coil of a break-in relay 193. This relay 193 is then actuated for the purpose of putting carrier current on the transmitter circuits and for other purposes to be hereinafter explained.

Contacts 140*c* close for the purpose of supplying a tone signal to the grid of transmitter modulator tube 418. Contacts 140*d* open in order to disconnect the microphone circuit from the primary of transformer 95.

Tone signal is derived from the two-tone oscillator 423, the output circuit of which includes the limiting resistors 83 and 84 in circuit with the +400 volt motor generator feeder. The oscillations from the tube 423 are impressed across the capacitor 85 to the transformer 88, both windings of which are grounded at one end. By means of taps *e* and *f* on the secondary of transformer 88, the inductance of the secondary is altered under control of relay 139, this relay being actuated by current fed thereto when toggle switch 368 is in the A-position. During the entire time of dialing the number of a called station, relays 139 and 140 are actuated in response to the setting of toggle switch 368 to the A-position so that the input circuit for tube 423 includes only a portion of the secondary turns on the transformer 88. The input circuit for the oscillator tube 423 may, therefore, be traced as follows:

From ground, which is cathode potential, the input circuit includes the selected portion of the secondary winding of transformer 88, the front contact *a* of relay 139, the grid leak condenser combination 86, 87 and thence to the grid of discharge tube 423. The inductance of this circuit is such that, when combined with certain capacitances, either of two tone-frequency signals are impressed upon the modulator tube 418. One of these frequencies is determined by the capacitor 130 which is normally in shunt with the secondary winding of the transformer 88 when relay 141 is not actuated, while the other frequency is determined by the capacitor 131 which is additionally introduced when relay 141 is actuated. This variation in tone frequency is explained as follows:

Let it be assumed that the two tone frequencies are 1500 cycles and 600 cycles respectively. Between counting impulses, therefore, it is desired that the 1500-cycle tone shall be impressed as a modulation upon the carrier wave of the transmitter. This 1500-cycle tone is developed by the oscillator 423 when only the capacitor 130 is in shunt with the secondary winding on transformer 88. This capacitor circuit may be traced as follows:

From ground through capacitor 130 to front contact 139*b* and thence across the grid leak capacitor combination 86, 87 the circuit goes to the grid of oscillator tube 423.

When the impulsing relay 141 energizes in response to the closing of impulsing contacts 404, then the supplementary capacitor 131 is added to the capacitor 130. This additional capacitance changes the tuning of the input circuit so as to cause the tone frequency to become 600 cycles. Preferably a resistor 89 is placed in series with the capacitor 131.

When the station to be called is not provided with a two-tone selector and alarm bell it is then necessary to send out so-called "whistle signals" which may be responded to by the loud-speaker of the called station. These "whistle signals" may consist of dots and dashes and may be sent out by means of the dial 364. In this case a dot is transmitted by fingering the #1 hole in the dial and the dash by fingering the #4 hole in the dial. During the operation of whistle signalling, however, the toggle switch 368 is placed in the B-position, whereat its contacts *c* and *d* are opened. In this position relays 139 and 140 are normally de-energized. Relay contacts 139*a* are made in the back position, thus connecting additional turns on the secondary winding of the feed-back transformer 88. Additional capacitance is introduced into the resonant circuit as by means of the capacitor 151. This capacitor is connected between ground and the grid circuit for the oscillator tube 423 through back contact 139*b*. The added inductance and capacitance lowers the tone of the oscillator to preferably 300 cycles.

Relay contacts 139*c* are used to adjust the amplitude level of the output from the oscillator 423. The 300 cycle tone when impressed on the grid of modulator amplifier 418 needs to be reduced in amplitude compared with the 600 cycle and 1500 cycle tones. For the latter (when movable contact spring 139*c* engages with its front companion) the useful signal circuit is shunted by a series path through resistors 154 and 155 to ground. When, however, relay 139 is de-energized for 300 cycle signalling, then resistor 154 is traversed by the total output from the oscillator 423 and a larger portion of this output is shunted off to ground through resistor 155.

As previously stated, the tone frequency oscillator tube 423 possesses an exclusive filament source (not shown) consisting of a center-tapped secondary on transformer 129 (Figure 5). The center-tap is connected to front contact 140*a* and the companion contact is grounded. Relay 140 is energized by the closing of the off-normal springs 403 on the dial 364 or by setting the toggle switch 368 to the A-position. For sending code combinations of dots and dashes the toggle switch is set to the B-position, so as to use dial springs 403 for keying the oscillator 423 on and off; the dial being fingered "1" for a dot and "4" for a dash.

The transmitter power supply

The power supply unit 417 has been incidentally mentioned heretofore. It comprises a motor 425 for driving three separate generator units as follows:

The unit 426 provides an A. C. supply of preferably 65 volts for energizing filament transformer 129 having a number of secondary wind-

ings for different portions of the transmitter equipment. A 50 volt D. C. supply unit is indicated at 427, its positive brush being grounded. The third generator unit 428 has two sets of commutators, one for delivering a D. C. supply of 400 volts, and the other an additional 600 volts. The 400 and 600 volt commutators are in series. This provides 400 volts for audio oscillator plate, power amplifier screen, crystal oscillator plates and screens, and microphone amplifier plate. The 1000 volt terminal feeds to the plates of modulator tubes 419 and 420 and to the power output tube 813. Filtering means (not shown) are provided for each of the output circuits from the motor generator, and the frame of the motor generator set is kept free from ground in order to maintain the effectiveness of this filter.

Hand set relay system

When hand set 372 (Fig. 1) is raised, the cradle contacts 371*a* and 371*b* are closed. Contacts *b* supply −90 volts from the ship's line to the coil of relay 144, the other terminal of which is connected through a limiting resistor 146 to the +90 volt ship's line. Relay 144 remains energized, therefore, as long as the hand set 372 remains off the cradle. The cradle contacts *a* complete a 50 volt D. C. circuit to the dial contacts 403 and toggle switch contacts 368*c* and 368*d*, as well as to one of the contacts of a push-button 365 which is used in connection with the reception of weather reports.

The actuation of relay 144 provides the following conditions:

Contacts *a* connect +90 volts (ship's line) to a starter relay 429 (Fig. 5) by means of which the motor generator unit 417 is started up. Contacts 144*a* also supply +90 volts through a resistor 148 to actuate relay 143 and thence to the −90 volt side of the ship's line. Contacts *b* close a circuit from the earphone 401 to the secondary of receiver output transformer 287, thus enabling the operator to listen to a conversation as received by any one of the receiving sets.

Contacts 144*c* connect the microphone 400 with front contact 142*a* and thence through back contact 140*d* to the primary of microphone transformer 95 at the input end of the modulator circuit. Contacts 144*d* are used only when dialing, since they close a circuit from the impulsing contacts 404 on the dial to the impulsing relay 141.

The functions of relay 145 are identical to those of relay 144, but relay 145 is actuated by lifting the other hand set shown in Fig. 2, and it serves to connect the microphone and earphone of that hand set with their respective transmitting and receiving instruments.

It was stated that relay 143 is actuated in response to the actuation of relay 144 (or relay 145). The conditions thereby obtained are as follows:

Contacts 143*a* connect the −50 volt motor generator feeder with the coil of relay 142, this circuit traversing a resistor 149, the relay coil, and thence to ground. The purpose of the resistor 149 is to delay the action of this relay 142 by an appreciable amount, as will be hereinafter explained. Contacts 143*a* also supply a locking voltage to relay 358, provided this relay is first actuated in response to the depression of push-button 365. Contacts 143*b* are used to complete a locking circuit for any one of the relays 136, 137 and 138, provided one of these relays is selected for actuation by a channel-selecting push-button 430. The movable contact 143*b* is connected through resistor 150 to back contact 431 which is appropriate to the push-button 430 furthest to the right on the control unit shown in Fig. 2. Normally this contact is in series with other contacts of all of the push-buttons of the two control units, finally ending at movable contact 432 on the push-button 430 furthest to the left in the control unit shown in Fig. 1. The last mentioned contact is connected to the −50 volt line from the motor-generator. The purpose of the series circuit through all the push-buttons is to open this locking circuit whenever a new channel selection is made. It thus will be seen that any previously locked channel relay 136, 137 or 138 will be unlocked at the time of making a new selection.

Relay contacts 143*c* open the loud speaker circuit in order that reception may be obtained on the earphone 401 only. The loud speaker circuit has been previously traced under the caption of "The receiver circuits."

The functions of relay 142 may be stated as follows:

Contacts 142*a* connect the microphone circuit from microphone 400 through contacts 144*c* or 145*c*, to contacts 140*d* and thence to the primary of modulator amplifier transformer 95. Contacts 142*b* open the −90 volt circuit from contacts 193 *u*, *x* to the back contacts *c* of relays 136, 137 and 138. Contacts 142*c* open in order to disconnect the automatic selection circuit for relay 136 since these contacts momentarily close a 50 volt circuit through the winding of relay 136 only during the time between starting up of the motor generator and the delayed action of relay 142. If, however, when lifting the hand set, a different channel selection is to be made, this can be done with relay 142 energized inasmuch as the locking circuit for relay 136 will then be opened in the same manner as for disconnecting any other used channel relay in response to the breaking of the −50 volt connection through the push-button series.

Contacts 142*d* close in order to apply the −90 volt source to the ringer restoring mechanism in the call selector 437, as will be hereinafter explained.

Channel selection

When responding to an incoming call it is frequently the case that this call will be made on the calling channel #5. It is only necessary then to lift the receiver and commence a conversation for the reason that, as soon as the motor generator 417 starts up, current is supplied through an already closed circuit from the −50 volt motor generator lead through relay contacts 142*c* and thence through the coil of relay 136 to the grounded positive side of the 50 volt motor generator source. Due to the impedance of resistor 149 in series with the coil of relay 142 this relay does not open its *c* contacts until after relay 136 pulls up and establishes its own locking circuit through contacts 136*b*.

The functions of relay 136 (appropriate to the selection of channel #5) are as follows:

Contacts 136*a* close a circuit from the −50 volt motor generator lead to each of the parallel-connected windings of two relays 6 and 12 (Fig. 6). Relay 6 pulls up in order to extend the transmitter power amplifier circuit through capacitor 30, relay contacts 6*b*, antenna coil 24, relay contacts 6*a* and thence to the transmitting antenna 3.

Relay 12 also energizes for the purpose of

extending the output circuit of the channel #5 transmitting oscillator 79 through contacts 12b, thence through capacitor 38 and resistor 37 to the control grid of the power output tube 813. Contacts 12a complete the filament supply circuit from the A. C. filament transformer 129 through conductors 415 and 416 to the filament of the selected oscillator tube 79. Thus only one of the transmitting oscillators is put into service for controlling the carrier wave frequency delivered by the power output tube 813, the other oscillator tubes 79 being deprived of filament current.

An additional function of relay contacts 136a is to supply current to the appropriate one of the channel indicating pilot lamps 367 on the control unit. The circuit for this pilot lamp leads through a resistor 442, the filament on pilot lamp and thence to ground.

Contacts 136b are associated with a locking circuit for the relay itself. This circuit may be traced from the —50 volt motor generator lead which is carried to the movable contact 432 of push-button 430, and thence through all of the push-buttons of the two control units to back contact 431 of the push-button furthest to the right on control unit of Fig. 2 and thence through a circuit which may be traced to conductor 405 intermediate between resistors 191 and 150. This —50 volt source is then extended through resistor 150, contacts 143b, contact 136b and thence through the coil of relay 136 to ground. It will be apparent from the tracing of this locking circuit that relay 136 will be de-energized upon depressing any of the channel selecting push-buttons 430 other than its own appropriate push-button.

Front contact 136c serves to connect the cathodes of the channel #5 receiver oscillator converter tubes through contacts *u* and *x* of relay 193 to the —90 volt ship's line. These receiving tubes for the channel #5 receiver are thus energized to the exclusion of corresponding receiver oscillator converter tubes in the other receivers, whereas the back contacts 136c, 137c and 138c serve to maintain each of the receivers operative when they are to remain so for standby requirements. The disconnection of unwanted receivers during a telephone conversation is obtained by energizing relay 142 and opening its contacts *b* between the —90 volt ship's line and the aforesaid parallel connected back contacts 136c, 137c and 138c.

The control of relay 137 and 138 is similar to that of relay 136, except for the fact that push-button operation is required in all cases in order to make the desired channel selection. If, for example, relay 137 corresponding to channel #2 is to be operated, then the appropriate push-button 430 is depressed momentarily. As soon as relay 137 pulls up, its locking circuit through contacts 137b is established and will be held by virtue of the current flowing through resistor 150 as previously described. In this case the appropriate transmitter oscillator 79 will be put in service by the actuation of relay 11. Relay 5 will also be actuated to connect the transmitting antenna 3 with its antenna tuning coils which are tuned to the carrier wave of the #2 channel. Finally the cathode of the oscillator and converter tubes in the #2 channel receiver will be connected to the —90 volt ship's line to the exclusion of similar connections with the oscillator and converter tubes of the other receivers.

The vodas relay system

Among the objects of our invention we mentioned that we preferably provide a speech-responsive relay for short-circuiting the receiving antenna and for impressing a modulated carrier wave on the transmitting antenna. Among those conversant with radio telephone practice such a speech responsive relay is sometimes termed a "vodas" relay. Relay 42 is here shown (Fig. 5) performing such a function in cooperation with relay 193. The operation of this system is as follows:

Speech currents from the push-pull tubes 419 in the microphone amplifier circuit are impressed across resistors 108 to the primary of a transformer 105. The secondary of this transformer is connected at one terminal to the —90 volt ship's line and the other terminal feeds across resistor 106 and capacitor 107 to the grid of a discharge tube 424. The cathode of this tube is heated by an appropriate secondary (not shown, but one of the plurality previously mentioned) on filament transformer 129, this secondary having a center tap which is connected to the —90 volt ship's line. The anode of tube 424 connects through contacts 140b to the winding of relay 42 and thence to the +90 volt ship's line.

Speech currents impressed across the transformer 105 have the effect of blocking tube 424 so that relay 42 de-energizes. Accordingly the grounded (+50 volt) armature of relay 42 rests upon its back contact and completes a circuit from the —50 volt motor generator lead through resistors 433 in the two control units. The leakage currents through these resistors serve no useful purpose at this time, however, but the grounded armature of relay 42 diverts this current from the pilot lamps R so that the two filament terminals of these pilot lamps are maintained at the same +50 volt potential and the lights go out. The transmitting pilot lamps T, however, are lighted by this grounded +50 volt potential through their filaments to conductor 434 and thence through resistor 191 to back contact 431 of the push-button series. The other end of this series is connected by contact 432 (Figure 1) to the —50 volt lead. Accordingly the transmitting pilot lamps are lighted. At the same time relay 193 operates, since one of its terminals is supplied with current from the grounded +50 volt source, and the other terminal is in series with resistor 191, the push button series and the —50 volt lead to contact 432 (Figure 1).

When speech currents in the transformer 105 cease, then discharge tube 424 becomes conductive, relay 42 is actuated and ground potential is placed on both sides of relay 193 as well as upon both sides of the filaments in the pilot lamps T. Under these conditions a telephone conversation may be received, and pilot lamps R will so indicate, because their filaments are no longer shorted out by a ground potential on the back contact of relay 42.

The functions of relay 193 will now be explained:

This relay is of a special type wherein, if the relay is energized, contacts *u*, *x* first open, secondly, contacts *v*, *y* close and thirdly, contacts *w*, *z* close.

The opening of contacts *u*, *x* removes the —90 volt source from the receiver oscillator and converter tubes so that the receiver in use goes dead. This circuit may be traced from the —90 volt ship's line through contacts *x* and *u* to the par-

ticular front contacts *c* of the selected relay **136**, **137** or **138** appropriate to the channel in use, and thence to the receiving oscillator and converter tubes in use.

Contacts *v*, *y* close in order to ground the receiving antenna 2. Finally contacts *w*, *z* close in order to place ground on the center taps of filament source secondaries on transformer **129**. This grounding of the secondaries removes blocking voltage from the bias circuit between the cathode and the first grid of the transmitter oscillator **79** of the particular transmitter in use. Blocking voltages are also removed from the grids of tubes **420** in the transmitter modulator circuit. The oscillator and modulator tubes, therefore, become normally biased and are conditioned for transmission of modulated speech waves.

The vodas relay system is quick-operating in response to the impress of speech currents on the modulator circuit, since the relay **193** becomes energized as soon as the armature of relay **42** releases to open the grounding circuit at the lower end of resistor **191**. However, when speech is momentarily interrupted, as between the words of a sentence, the relay **42** is made slow-acting by virtue of the time constant of the grid leak condenser combination **196—197** on the tube **424**. With reasonable continuity of speech, therefore, the relay **42** remains de-energized and relay **193** remains energized. After a moment's delay, however, in an outgoing conversation the receiving circuit is restored to its operative condition while the transmitter carrier is cut off by the blocking of the oscillator tube **79**, as when its cathode becomes connected to ground through the resistor **436**. A steady potential drop is developed across this resistor by virtue of its connection through resistor **435** to the +400 volt generator source. Keying of the transmitter is thus obtained by closing the contacts *w*, *z* of relay **193** so as to short-circuit resistor **436**.

The weather relay

Weather relay **358** is energized by a momentary impulse impressed thereon through push-button **365** on the control unit. Toggle switch **368** is placed in the B-position. The hand set **372** is removed from its cradle. The push-button **365**, therefore, receives a —50 volt current from the motor generator (now started up) through contacts *a* of the cradle switch **371**. The stationary contact of push-button **365** feeds this current to the coil of relay **358** and thence to ground. The functions of this relay are explained as follows:

Contacts **358***a* close a holding circuit for the coil of relay **358**, current traversing these contacts being derived from the —50 volt generator line through relay contacts **143***a*.

Movable contact of group **358***b* is connected to the —90 volt ship's line and when it contacts with its back stationary companion a filter **290** is in circuit between this —90 volt lead and the control grid of a first stage amplifier tube **291** in the loud speaker amplifier **414**. Tube **291** has its cathode-to-anode circuit energized by the 90-volt ship's line, which is insulated from ground. The purpose of filter **290** is to intensify the 300 cycle tone which is used for "whistle signalling" when the loud speaker is in a standby condition. Hence the 300 cycle calling tone is more readily heard above the noise level of miscellaneous transmissions received on the various channels. During reception of weather reports, however, this 300 cycle filter **290** produces a certain amount of distortion which adversely effects the clearness of reception of weather reports. Accordingly the closing of movable contact **358***b* against its stationary front companion shunts out the filter **290** in the circuit from the —90 volt lead to the grid of tube **291** and in place of the filter **290** a non-inductive resistor **292** is introduced which affords substantially the same D. C. impedance as the inductance of the filter.

Contacts **358***c* remove ground from the *w* contact on relay **193**, thereby disabling the transmitter. When the movable contact **358***c* engages with its front contact, ground potential is impressed upon one side of the microphone circuit, the other side of which is permanently grounded at the hand set. This avoids accidental actuation of the "break-in" relay **193** by release of relay **42** due to noise impressed upon the microphone circuit. Contacts **358***d* close in order to complete the loud speaker circuit from transformer **287** to the voice coil **375** of the loud speaker.

It will thus be seen that all the necessary conditions are established by the operation of relay **358** for the reception of weather reports on the loud speaker.

Signing off procedure

When a conversation has been finished, or when the listening to weather reports is finished, the hand set **372**, which has been removed from its cradle, is hung up. The opening of contacts **371***b* de-energizes relay **144** or **145** (whichever one has been actuated). The relay in the motor generator starter **429** is released, thereby shutting down the motor generator system. All relays which were energized by the 50 volt generator power supply are released. The standby conditions for reception on all of the receiving circuit channels is restored. The transmitter circuits are entirely de-energized.

The call selector and ringer

Three methods of making a call have been described, one by dialing a code number to which the call selector in the receiving station responds, to the exclusion of call selectors at other stations; a second by manipulating the dial to produce dot and dash impulses of a 300 cycle tone frequency which is to be heard as a whistle signal on the loud speaker of the called station; and a third by talking into the microphone when using the calling frequency channel #5, the intention being to have the speech heard in the loud speaker of the called station.

Since the loud speakers at all stations not engaged in a conversation are assumed to be maintained in a standby condition of reception, either the second or third methods of calling may be successful but they are not as desirable as the first method, provided the station to be called is equipped with a call selector such as indicated at **437** (Fig. 3).

Various types of call selectors are known in the art but the type particularly adapted to our system is one wherein a step-by-step switch may be actuated in response to trains of impulses of different counts dependent upon the code number of the called station. We have found that a so-called "104A selector set" manufactured by the Western Electric Company meets our requirements. In such a selector set a step-by-step switch is equipped with a code wheel adapted to render the selector responsive only to its own designated code signal. The call selector is, therefore, adapted to be tripped and set back to its initial position whenever a difference occurs between

the code signal used and the code signal for which the call selector is adapted to respond. If the call selector at the station to be called follows the two-tone dialing impulses through to the completion of the code signal, then the code wheel reaches a point where it closes a local circuit to the bell **438**. The bell will continue to ring until a responsive device on the selector is actuated by a local circuit through contacts **142***d* which are closed in consequence of lifting the hand set **327** off its cradle.

The call signal may comprise two portions, one for selecting the intended station, and the other for indicating the channel on which a conversation is to proceed. After the calling signal has been dialed, therefore, the code wheel will be set to any one of four positions in response to the last operation of fingering the dial. These positions preferably indicate channels 1, 2, 5 or 6 and may be indicated on the annunciator **439** by means of pilot lamps each in circuit with a given one of certain contacting elements which are associated with the code wheel in the call selector. The details of construction of the call selector itself and of the code wheel and its associated contacts are not shown because applicants make no claim to novelty in respect to this construction.

The call selector **437** is actuated in response to tone signals which are derived from either of the audio frequency amplifiers shown in the blocks **412** and **413**. The signals are impressed across resistors **316** or **317** and coupling condensers **320** or **321**. The impulses are then amplified by a special ringer amplifier **440**, the output lead from which is shown connected to the call selector.

Recapitulation of operating procedure

While the uses of our invention will be more or less apparent to those skilled in the art after reading the foregoing description of the structure of a preferred embodiment, the advantages of our system may perhaps be better understood by reviewing the operating procedure as follows:

Our system is designed to receive incoming calls by means of a selective bell ringing system and also by means of a loud speaker. When the station is called by the selector and bell, the calling station dials a radio telephone number which rings the bell. When the station is to be called by loud speaker it is necessary to assume that the volume control of the loud speaker of the called station is turned on and that the officer on watch is prepared to recognize his own whistle signal. With either calling system, in order to reply, it is essential that the channel of conversation should be understood. On lifting the hand set, therefore, to answer a call one may immediately listen in on channel #5 if this channel is indicated by the pilot light on the annunciator **439**, otherwise the push-button for selecting the indicated channel must first be depressed.

If the whistle signal is used, the presumption is that the call is made on channel #5. The voice of the calling operator or the calling tone will, therefore, presumably be heard on this channel. The calling operator may then give instructions verbally as to the channel to be used for further conversation.

Even with whistle signals it is possible to designate the channel on which this further conversation is to be made. In this case 1, 2 or 3 short tones at the end of the whistle signal will indicate that reply should be made on one of the channels so designated.

Reception of weather reports may be provided on any of the assigned channels. After depressing the push-button for reception of weather signals, therefore, the receiving operator may press channel buttons 1, 2 or 3, using the channel which gives the best reception. The broadcast may be heard either from the loud speaker or from the hand set.

To call a station on channel #5 one should lift the hand set and listen in the telephone receiver to determine that no one else is using this calling channel, then it is possible to proceed to make a call either by talking or by dialing the whistle signal or by dialing the radio telephone number, all of which methods have been described.

The signing off procedure usually includes the announcement of station identification and then the hand set is replaced on its cradle. As previously explained, the opening of the cradle contacts **371***a* and **371***b* accomplishes the shutting down of the motor generator set and the restoration of all actuated relays to normal.

Various modifications of our invention will be understood by those skilled in the art as non-essential variations from the embodiment herein shown and described. The scope of the invention is, therefore, defined by the claims.

We claim:

1. In a two-way radio telephone system, transmitting and receiving apparatus including pre-tuned circuits for selective use at different carrier frequencies, a control unit remotely situated with respect to said apparatus, a telephone hand-set for use with said control unit, a hand-set cradle on said control unit, said cradle having circuit closing means operable upon lifting the hand-set therefrom, means responsive to the operation of said circuit closing means for applying power to said transmitting apparatus and for automatically selecting a predetermined set of said pre-tuned circuits in said transmitting and receiving apparatus, other circuit closing means for manually selecting a different set of said pre-tuned circuits, and means in said transmitting and receiving apparatus for conditioning the same to initiate or to answer a call on any assigned one of said carrier frequencies.

2. In a two-way radio telephone system, transmitting and receiving apparatus including pre-tuned circuits for selective use at different carrier frequencies, a control unit remotely situated with respect to said apparatus, a telephone hand-set cradled on said control unit when not in use, a power supply unit for said transmitting apparatus, a starter switch for said power supply unit, means operable in response to the lifting of said hand-set for controlling said starter switch, thereby to energize said transmitting apparatus from said power supply unit, a set of push-button switches mounted on said control unit, one for each of a plurality of assigned carrier frequency channels, relay means operable by said push-button switches for rendering operative an optionally selected set of said pre-tuned circuits corresponding to a desired carrier frequency channel, further means operable in response to the lifting of said hand set for automatically selecting a predetermined set of said pre-tuned circuits, means on said control unit under control of said relay means for indicating the selected channel while said hand-set is in use.

3. A radio telephone system having transmitting equipment including a carrier wave generator, a power amplifier, and a three-function

modulator cooperatively in circuit between the output side of said generator and the input side of said amplifier, said equipment being combined with radio receiving equipment including code call responsive apparatus and speech-responsive reproducing means, means including a microphone connectable to said modulator for causing it to perform a speech modulating function, means including a tone oscillator and an impulsing dial for causing said modulator to perform a second function by applying an interrupted monotone call signal to said power amplifier, means including a switch for producing a two-tone output from said oscillator in response to a dialing operation, thereby causing said modulator to exercise its third function by applying selective code signals to said power amplifier, and means in said radio receiving equipment for conditioning the same to effectively respond to any one of the types of signals corresponding with the three functions of said modulator when originated by remote transmitting equipment of the type herein defined.

4. A radio telephone system according to claim 3 and including in said receiving equipment a plurality of receiving circuits each pre-tuned to operate on a different carrier frequency channel, means effective at times for rendering said circuits simultaneously operative, and effective at other times for rendering a predetermined one of said circuits solely responsive during a telephone conversation.

5. A radio telephone system according to claim 3 and including in said receiving equipment a call selector responsive to selective code signals of the type produced by dialing a number.

6. A radio system according to claim 3 and including in said call responsive apparatus a loud speaker responsive to interrupted monotone call signals.

7. A two-way radio telephone system comprising transmitting and receiving circuits, said transmitting circuits having amplifier tubes, and having means for varying the potential difference between their cathodes and control grids from a blocking bias to an operating bias, said receiving circuit having an antenna with a connection closeable therefrom to ground, a hand-set including a microphone and ear-phone connectable respectively with said transmitting and receiving circuits, a modulation amplifier in circuit between said microphone and said transmitting circuit, means including a discharge tube external to the modulation amplifier and transmitting circuit for sensing the presence of speech currents in said modulation amplifier, a relay the winding of which is in the output circuit of said discharge tube, and means operable by said relay in response to said speech currents for removing said blocking bias from the tubes of said transmitting circuit, thereby causing a speech-modulated carrier wave to be sent out, and for simultaneously rendering said receiving circuit unresponsive by closing said receiving antenna ground connection.

8. In a radio telephone system having a transmitter and a receiver, a hand-set including a microphone and an ear-phone, a two-position switch operable by spring tension in opposition to the weight of said hand-set for supplying operating potentials from a given source to said system, means for modulating the output of the transmitter by voice currents through the microphone, a loud speaker, a loud speaker amplifier circuit having a low frequency-selective filter therein, said filter being adapted to enhance the audible reception of tone frequency call signals, means for switching out said filter, thereby to condition said system for the reception of a weather broadcast or the like, said means comprising a self-locking relay, a push button circuit for energizing said relay, contacts in said relay for substituting a resistance for said frequency-selective filter, other relay contacts for suppressing the generation of microphone and carrier wave currents by said transmitter, and still other relay contacts for connecting said loud speaker to its amplifier circuit; and means operable by said two-position switch when subjected to the weight of said hand-set, for unlocking said relay.

9. In a two-way radio telephone system, transmitting and receiving apparatus including pre-tuned circuits for selective use at different carrier frequencies, a plurality of control units separately and remotely situated with respect to said apparatus, a telephone hand-set cradled on each said control unit when not in use, means operable in response to the lifting of any one of said hand-sets for conditioning said transmitting apparatus to radiate a communication, a single series circuit through back contacts of different sets of push buttons, there being one set for each control unit, and means selectively and remotely operable by each of said push buttons for conditioning the pre-tuned circuits of said system to carry on a two-way conversation over a desired carrier frequency channel.

10. A radio telephone system comprising transmitting and receiving apparatus including station and channel selecting devices; a telephone hand-set adapted to be cradled in a control unit when not in use, said control unit being remotely situated with respect to said apparatus; a selector dial and channel-selector-push-buttons mounted on said control unit; means including a low frequency oscillator for modulating a carrier wave to be radiated by said transmitting apparatus; means for tuning the circuits of said transmitting and receiving apparatus to a desired carrier frequency under control of an appropriate one of said push-buttons; relay means under control of said selector dial for keying the output of said low frequency oscillator, thereby to send out a call signal; and means including a hand-set cradle switch settable by the lifting of said hand-set from its cradle, and including a relay system controlled by said switch for empowering said transmitting apparatus, also for supplying operating potentials from a suitable source to said relay system and thence to said low frequency oscillator.

11. A system according to claim 10 and including means operative under control of said selector dial for varying the frequency of said oscillator.

12. A system according to claim 10 and including "off-normal" contact springs controlled by said selector dial for keying the output of dot and dash signals.

13. A system according to claim 10 and including a double-pole-single-throw switch operative in one position for conditioning said dial to be so manipulated as to modulate said transmitting apparatus by alternate pulses of different tones from said low frequency oscillator, and in the other position for conditioning said dial to be so manipulated as to key said transmitting apparatus by dot and dash impulses of a single tone from said low frequency oscillator.

14. The method of remotely controlling the

transmitting and receiving apparatus of a two-way radio telephone system by means of a control unit having channel selector push-buttons, a station calling dial, and a normally cradled microphone-and-ear-phone hand-set, which comprises lifting the hand-set off its cradle to condition the transmitting apparatus for sending out keyed call signals and speech-modulations on radiated carrier waves, manipulating the calling dial to superimpose said call signals on said carrier waves, talking into the microphone of said hand-set to modulate said carrier waves while automatically silencing said receiving apparatus, disabling said transmitting apparatus while rendering said receiving apparatus operative on a selected channel during periods of silence at said microphone, and manipulating one of said push buttons to select a desired communication channel on which to transmit and to receive a telephone communication.

15. The method according to claim 14 and including the step of visually indicating at said control unit the selected one of the available communication channels.

JOSEPH F. McDONALD.
HERSCHEL B. MARTIN.