Dec. 19, 1939. G. F. McMAHON ET AL 2,183,751

CIRCUIT INTERRUPTER

Filed Feb. 3, 1936 4 Sheets-Sheet 1

Fig. 1.

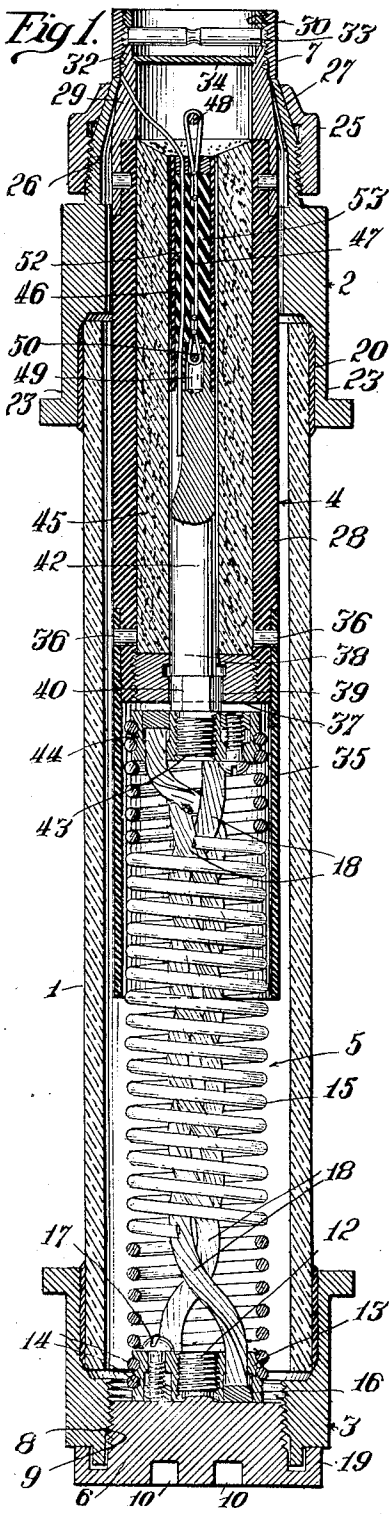

Fig. 5.

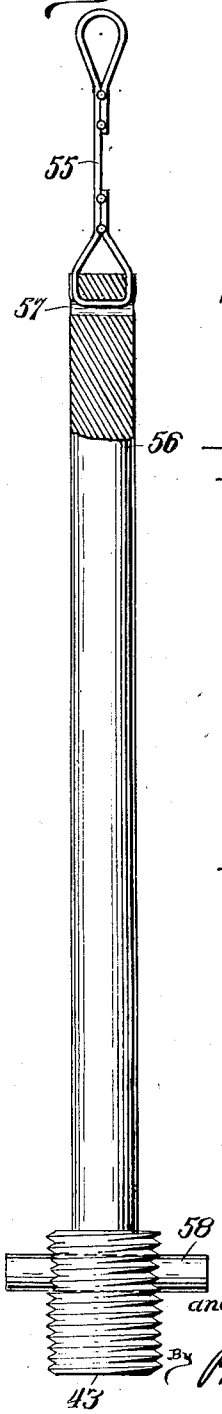

Fig. 2.

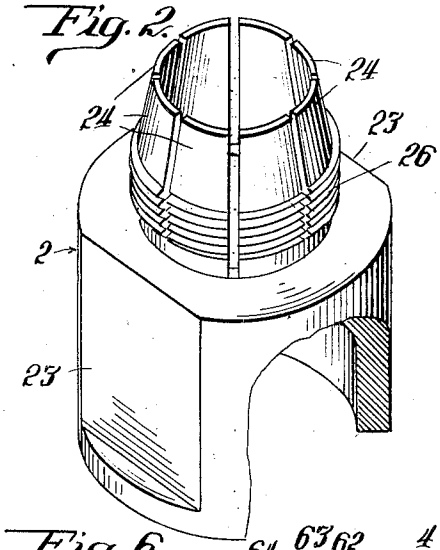

Fig. 6.

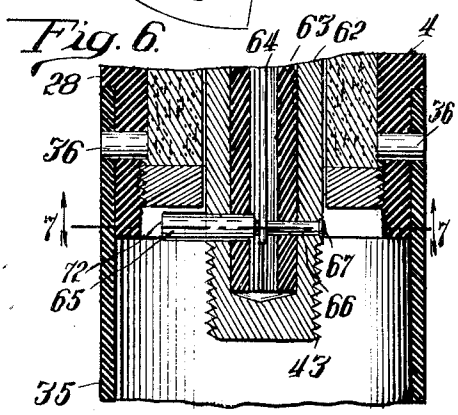

Fig. 7.

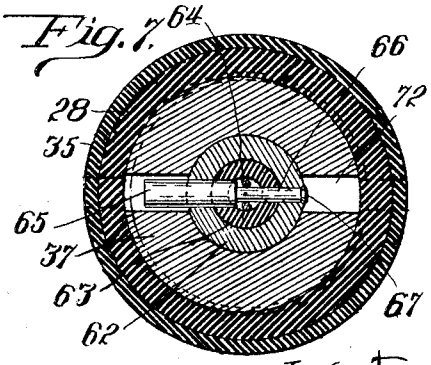

Inventors.
George F McMahon
and
Allan Ramsey
By Brown Jackson Boettcher Dienner,
Attorneys.

Dec. 19, 1939. G. F. McMAHON ET AL 2,183,751

CIRCUIT INTERRUPTER

Filed Feb. 3, 1936 4 Sheets-Sheet 2

Fig. 3.

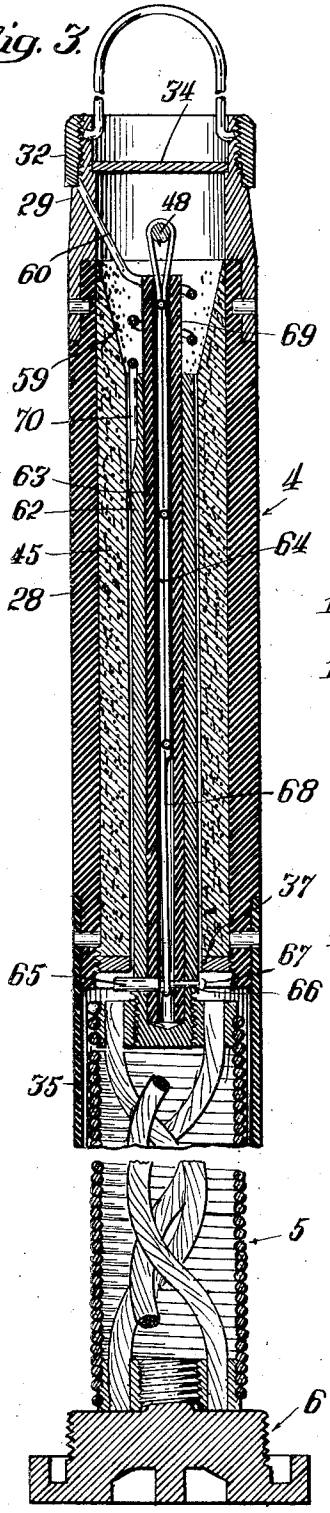

Fig. 14.

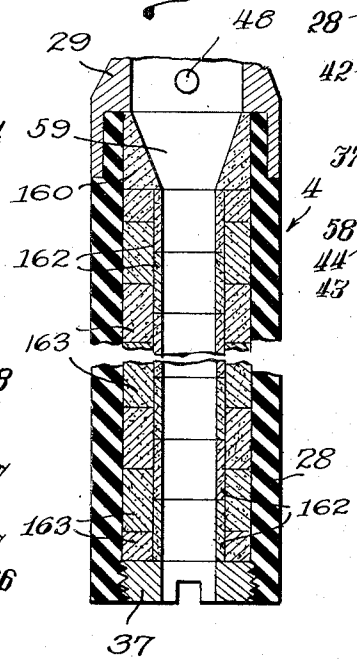

Fig. 10.

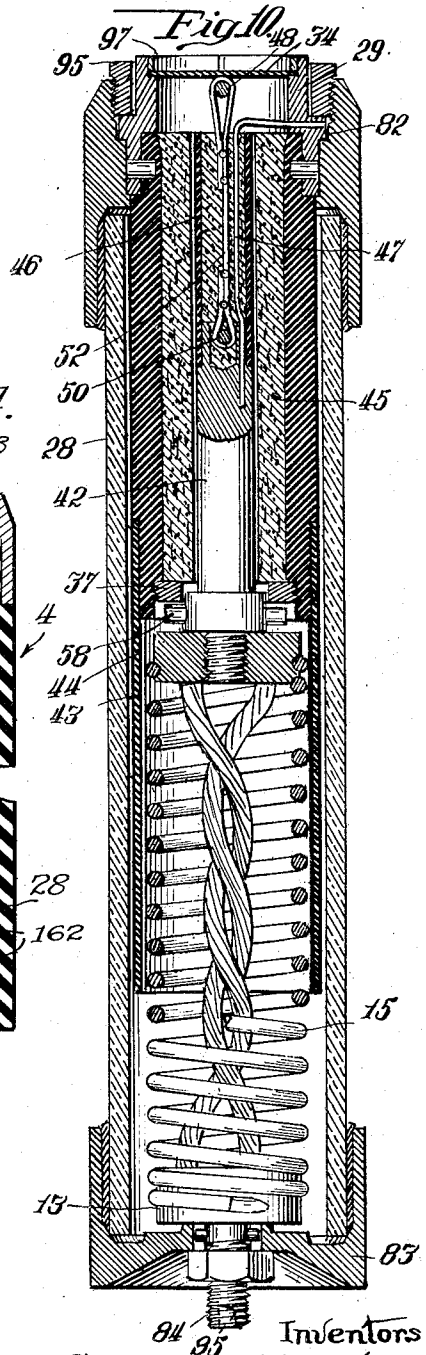

Inventors
George F. McMahon
and Allan Ramsey
By Brown Jackson Boettcher & Dienner
Attorneys.

Dec. 19, 1939. G. F. McMAHON ET AL 2,183,751

CIRCUIT INTERRUPTER

Filed Feb. 3, 1936 4 Sheets-Sheet 3

Fig. 8

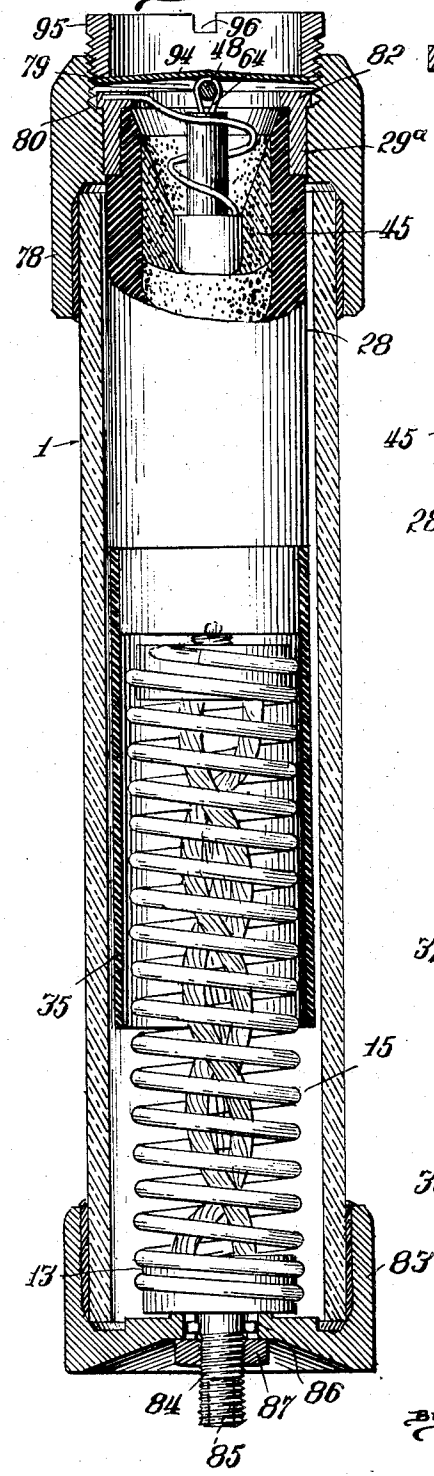

Fig. 9.

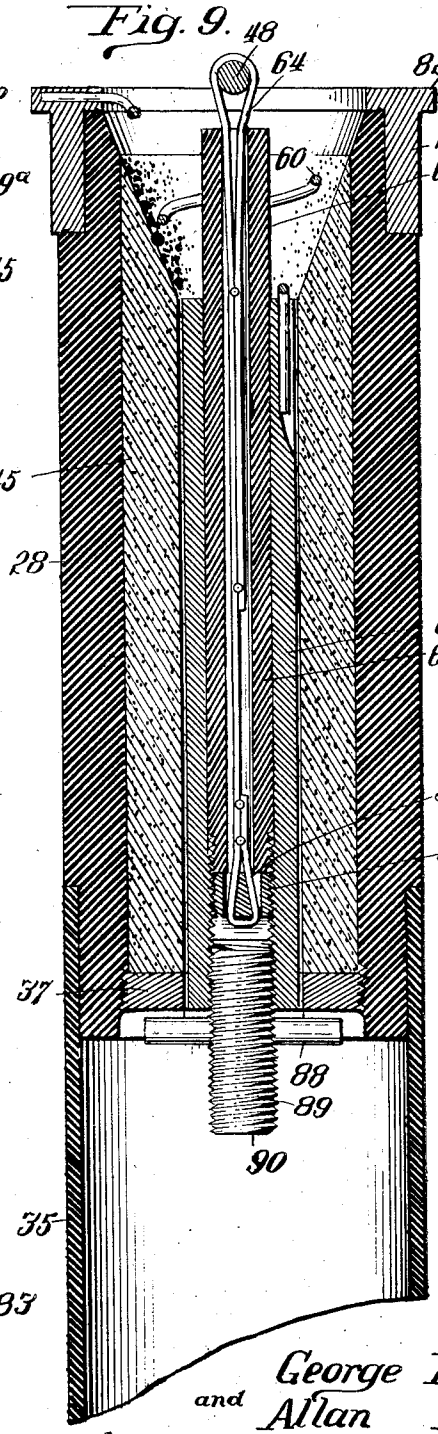

Fig. 4.

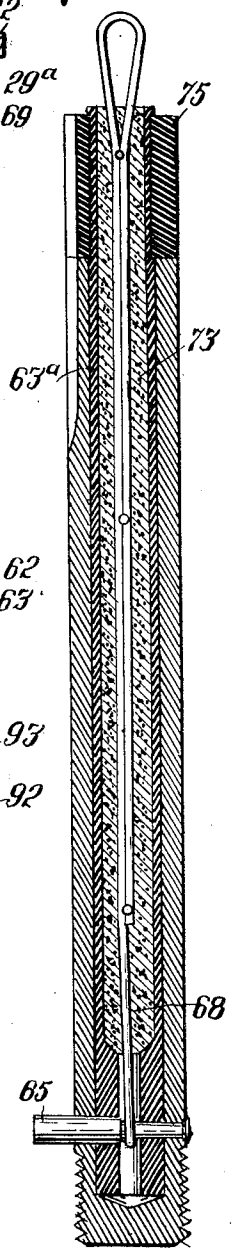

Inventors,
George F McMahon
and Allan Ramsey
By Brown Jackson Boettcher & Dienner
Attorneys.

Dec. 19, 1939. G. F. McMAHON ET AL. 2,183,751

CIRCUIT INTERRUPTER

Filed Feb. 3, 1936 4 Sheets-Sheet 4

Fig. 12.

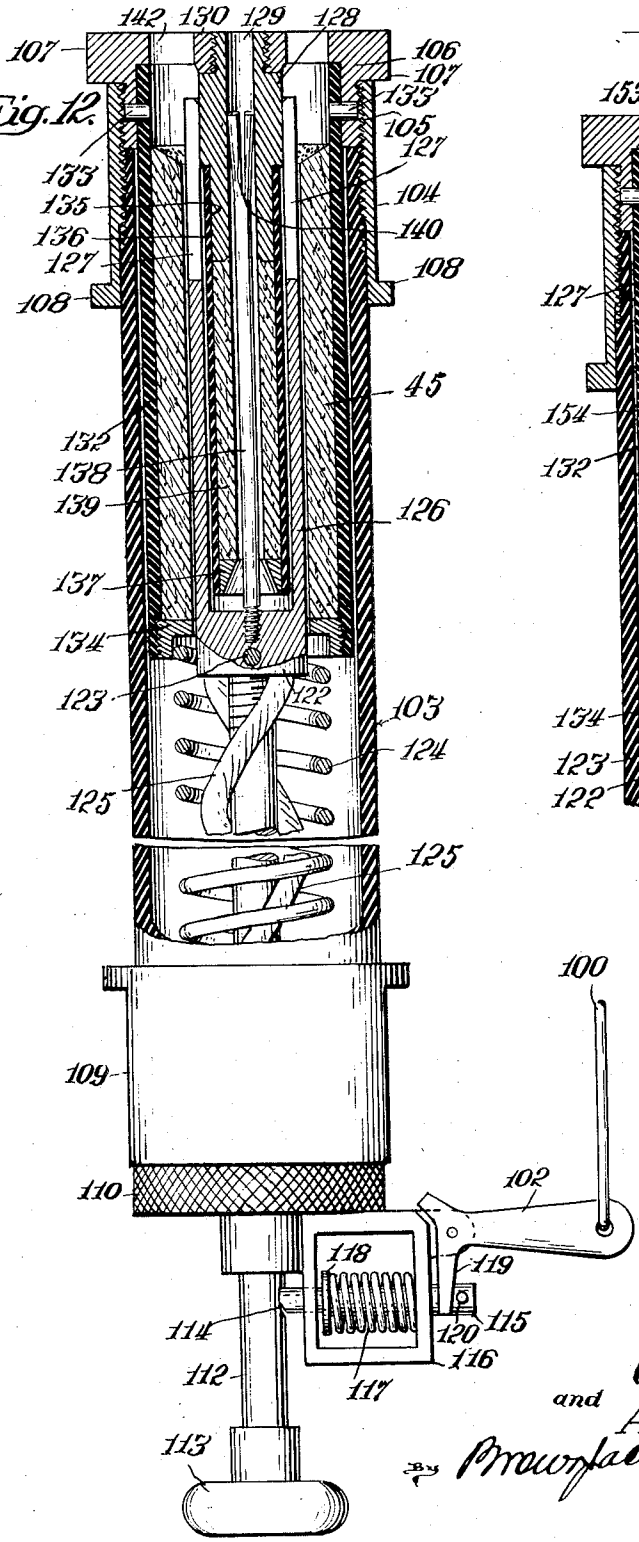

Fig. 13.

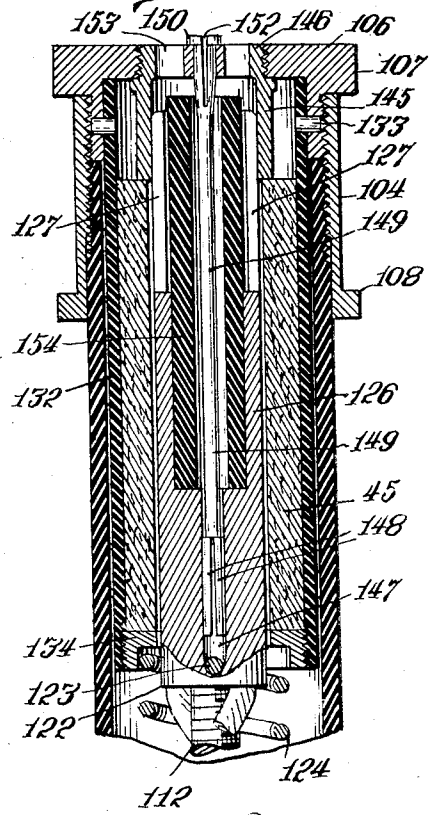

Fig. 11.

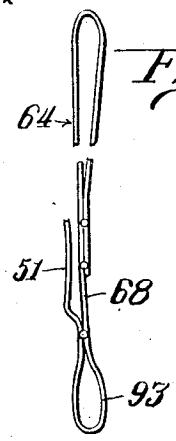

Inventors
George F. McMahon
and Allan Ramsey,
By Brown Jackson Boettcher Dennis
Attorneys.

Patented Dec. 19, 1939

2,183,751

UNITED STATES PATENT OFFICE

2,183,751

CIRCUIT INTERRUPTER

George F. McMahon, Chicago, and Allan Ramsey, Evanston, Ill., assignors to Schweitzer & Conrad, Inc., Chicago, Ill., a corporation of Delaware

Application February 3, 1936, Serial No. 62,118

88 Claims. (Cl. 200—117)

Our invention relates to circuit interrupters suitable for high tension power circuits.

The chief object of the present invention is to provide an improved circuit interrupter of the type employing a solid material from which there is evolved a gaseous medium serving to extinguish the arc whereby to interrupt the current flow, and which medium also serves to prevent reestablishment of the arc after it is extinguished. The gaseous medium preferably is utilized to produce a blast directed into the space between the terminals.

The production of a circuit interrupter fulfilling such object presents two main difficulties. First, there is the problem of securing positive circuit interruption of arcs occasioned by overloads which are of low current values. The second is the provision of a suitable material and organization which, while permitting positive circuit interruption on overloads, will not limit too greatly the capacity of the device for interrupting large currents.

Our invention may be embodied in a wide variety of forms. An essential in all forms is creating discontinuity of the normal conductive path. This results in an arc. The extinguishing of this arc and preventing its reestablishment presents the fundamental requirement, whether the apparatus be a fuse, or a switch, or other apparatus. We show herein both a switch and a fuse embodying the basic features of the present invention.

The circuit interrupter and particularly the fuse herein disclosed is a development in part of the so-called "ejector cutout" shown in Conrad Reissue Patent No. 17,612, of March 4, 1930. The circuit breaker herein disclosed is of the "one shot" type disclosed in Conrad Patent No. 1,336,069, of April 6, 1920. The ejector cutout employed a spring-tensioned fuse link consisting of a strain wire paralleled by a fusible conductor, both being surrounded by a cork, and which link was housed in an open-ended fiber tube. The cork furnishes a reduced bore of material which, under the action of the arc, is decomposed by heat to furnish a gas that serves to put out the arc and prevent its reestablishment. The bore of the fiber tube directs the evolved gases and vapors under all conditions of operation and serves under heavy current operation as a material from which the heat of the arc, by destructive distillation, drives off arc extinguishing gases. This device thus provided the advantage of the evolution of gas for producing the desired pressure of gas and the so-called blast or expulsion action. In mechanical structure it offered a simple and effective device. This arrangement with the cork free to move out of the end of the tube when only light gas pressure developed in back of it, at times caused a low current arc, which should have been interrupted in the cork, to transfer to the lower tube ferrule and be extended in the relatively large bore of the tube which was relatively slow and feeble in evolving gas on low currents.

When a heavy current is to be interrupted, the cork is blown out of tube almost instantly, and does little or nothing toward interrupting circuit. The gas evolved from the tube lining, at a rapid rate, is the arc extinguishing medium.

The present invention involves the principle of the retreating terminal in an arcing tube supplied with a specially provided solid material suitable to evolve gases. It utilizes the two-bore principle of the ejector cutout for the two ranges of current flow. In the preferred form of the invention, the strain wire and fuse wire are disposed in separate bores.

Circuit interrupters, and particularly fuses for the service for which the present invention is particularly applicable, are called upon to interrupt the circuit chiefly under two general conditions. The first is known as "overload", and it involves a flow of current in excess of the current rating of the fuse and persisting for a longer period of time than the fuse is intended to remain intact under such conditions according to its predetermined time-current characteristic. This condition produces an arc of low energy release in the device and, consequently, unless specific provision is made, inadequate gas evolution is likely to occur. The second condition is that of low impedance fault condition where a great flow current results. This is often termed short circuit condition. The flow of current produces a violent release of energy with a consequent violent evolution of gas, producing a blast action which insures a satisfactory ability to extinguish the arc. The same conditions are encountered in a switch or circuit breaker.

A device of the character herein disclosed is generally designed with reference to the maximum flow of current which it is intended to interrupt. If the current should exceed this maximum rating, the pressure of the evolved gases may be dangerous to the integrity of the structure. When less than the rated maximum occurs, the tendency is for the gas evolution to be less violent and less effective. Hence, unless special provisions are made to meet the situation, an overload current may produce insufficient gas evolution to produce the necessary extinguishment of the arc. One of the particular features of the present invention is the organization of the device to accomplish extinguishing of the arc under all conditions of current flow under which it may be called upon to operate, and particularly in the case of a fuse under all conditions of current flow which cause melting of the fusible element.

An electric fuse is a protective device. As such,

it should be accurately responsive to the conditions for which it is intended to become active. Furthermore, such accuracy and responsiveness should be stable and permanent. It should be so designed and constructed as to operate in accordance with some certain predetermined time-current characteristic. It must carry full rated load without damage and without impairment or change of its predetermined characteristics. Also, it must be capable of taking transient overloads without operation and without changing its predetermined characteristics.

Fuse conductors of the type usually employed, operating at elevated temperatures, are peculiarly subject to chemical attacks by oxygen or other reagents in the atmosphere or other surrounding medium. When the fusible element assembly stands under spring tension, the conditions produced by heating or by corrosion, or by both, are highly adverse. According to the present invention, we employ as the fusible element a silver, or silver alloy wire which is substantially free of chemical attack by oxygen or other usual reagents present in the atmosphere or in a fuse housing of fuses of this type. Also, we employ, as a chemical arc extinguishing medium, a substance such as magnesium hydrate, boric acid, or the like, which, as solids or powders, when compressed or molded, will possess good mechanical properties and which will deliver, under the action of the arc, a vapor or other gaseous medium favorable to arc extinction and the surface of which material, following circuit interruption at current zero, regains its insulating properties at a greater rate than the recovery of the system voltage.

It is an object of the present invention to provide blast producing means suitable in form and composition and properly organized in correlation with the other parts of the circuit interrupter to provide satisfactory operation throughout all values of current flow to be interrupted.

The above and such additional substances as are herein disclosed do not, when used in a fuse, cause corrosion of the fuse wire, and being subjected to the normal operating temperature of the silver fuse, will not deteriorate.

To avoid the effect of the spring tension upon the rather soft metal of the current sensitive element, and particularly when the same is at an elevated temperature, we employ as a strain wire a high tensile strength wire of a higher electrical resistance than silver, which strain wire is also highly resistant to chemical attack and retains its properties under rated current flow and will not melt or lose its tensile strength until after the fuse wire is melted in the operation of the device.

The strain wire and current sensitive wire cooperate in a novel manner herein in acting as two parallel fuses of different current carrying capacities and different resistances. The fuse wire itself first melts and throws the current through the strain wire which, for a very brief period, carries the full flow of current during overload operation. Any arc which would tend to be formed by the silver fuse wire is put out by the effect of the parallel path through the strain wire. The strain wire then parts and releases the spring terminal and produces elongation of the arc, together with the desired blast action.

Optionally the strain wire may be so constructed that it will continue to maintain the arc, particularly under low current operation, so as to allow increase of the gap at the melted silver fuse before extinguishing of the arc at the strain wire occurs. This tends to establish the arc definitely at the severed ends of the strain wire, particularly under low current arc conditions, and is desirable particularly where, as in certain forms of the present invention, the strain wire is disposed in a separate bore and subjected to an individual blast action to extinguish the arc therein. Also, the strain wire may be normally out of the circuit and connected into the circuit only by the increase of potential across the terminals of the silver wire upon melting, or by the effect of ionized gases, as by introducing a gap in the circuit of the strain wire. This may be done by insulating the strain wire at the suspending pin.

If the rise of voltage is such as to cause the arc to be reestablished between the terminals of the fuse element in a separate bore or in an enlarged bore, the arc extinguishing material available there will provide the blast for extinguishing the arc and preventing reestablishment. In addition to the purely blast action the pressure of the gaseous medium may also be utilized in the action of arc extinguishing. Also, chemical action of the evolved medium with the metallic or other constituents of the material by which the arc is sustained or chemical reactions initiated by the arc to evolve the gaseous arc extinguishing medium may be employed.

A feature of the present invention is the construction and organization of the strain wire to insure blowing thereof in the corresponding bore at a point remote from the outlet so as to secure the desired blast action for overload operation. A further feature is the arrangement of the fuse wire so it will form its interruption adjacent the outlet of the bore with which it cooperates to put out a heavy current arc, particularly to prevent too violent action on heavy current operation.

A further general object of the invention is to provide, in a device of the present type, a novel and useful disposition of the arc establishing means and the cooperating arc extinguishing material in order, in the case of a fuse, to promote stability of the components during normal load current conditions and in any form of device to promote effectiveness during interrupting action.

A further object is the provision of novel arc extinguishing materials for fuses of this type.

A further object is the provision of a refill unit so organized as to facilitate refilling of the device in the field, to prepare it for another circuit interrupting operation.

A further object of the invention is to improve the operation of circuit interrupters of this general type

Now in order to acquaint those skilled in the art with the manner of constructing and operating a device embodying our invention we shall describe, in connection with the accompanying drawings, a specific embodiment in which our invention appears.

In the drawings:

Figure 1 is a longitudinal vertical section of a fuse embodying our invention;

Figure 2 is an isometric view of the upper ferrule showing the integral chuck jaws;

Figure 3 is a side elevational view of the operating parts of the fuse, including the refill unit;

Figure 4 is a longitudinal section through the insulating sleeve and liner for the refill unit shown in Figure 3;

Figure 5 is a side elevational view of one form of plunger or arcing terminal and connected fuse which forms also the strain wire;

Figure 6 is a fragmentary sectional view showing a detail of the connection between the movable plunger or arcing terminal and the associated refill unit;

Figure 7 is a cross-sectional view taken on the line 7—7 of Figure 6;

Figure 8 is a longitudinal vertical section through a modified form of fuse;

Figure 9 is a longitudinal section on an enlarged scale of the refill unit shown in Figure 8;

Figure 10 is a longitudinal vertical section through another modified form of fuse of our invention;

Figure 11 shows a modified form of strain wire;

Figure 12 is a side elevational view with the upper part in longitudinal section showing a circuit breaker embodying our invention;

Figure 13 is a longitudinal sectional view of the upper part of a modified form of circuit breaker; and

Figure 14 is a fragmentary longitudinal section through a modified form of refill unit.

The fuse device shown in Figure 1 comprises two main parts, namely, first, the housing, which includes the glass sleeve 1 with the ferrules 2 and 3 permanently fixed upon the ends of the same; the second part comprises the refill unit designated as a whole by the reference numeral 4, and the spring and cable unit, designated as a whole by the reference numeral 5.

Normally, in the refilling of a fuse which has operated, the refill unit 4, spring assembly 5 and mounting plug 6 are removed from the housing and a new refill unit 4 is substituted and placed in the housing. The manner in which this is accomplished will appear more clearly hereinafter but it may be pointed out here that the refill unit is mechanically and electrically coupled to the ferrule 2 by the chuck or compression coupling 7 at the upper end of Figure 1. The opposite end of the refill unit is coupled by a screw coupling to the upper end of the spring and cable assembly 5 and the lower end of the spring and cable assembly is coupled to the plug 6 by a similar screw coupling.

The glass sleeve 1 has cemented upon its lower end ferrule 3, which ferrule is made of brass, bronze or the like, provided with a bore of great enough size to pass the refill unit 4 therethrough. This bore is provided with internal screw threads 8 and with these screw threads is adapted to cooperate the threaded external surface 9 of plug 6. The plug 6 is provided with a pair of saw cuts 10—10 for the application of a suitable wrench or the like to draw the plug tight upon the screw threads or to loosen the same.

The plug 6 has an integral threaded stud 12 which threads into the corresponding threaded opening in a disc member 13. The disc member 13 is exteriorly provided with a helical groove, into which groove are threaded the lower convulutions 14 of the helical tension spring 15. The disc or spring anchor 13 is provided with a relatively deep groove on its back side to receive a flat ring 16 thereinto. The disc or spring anchor 13 is drilled parallel to its axis to provide three holes to receive the lower ends of the flexible strands 18 and also to provide three holes for the clamping screws 17 which extend into and thread into the clamping ring 16. The ends of the flexible leads or cables 18 are passed through the corresponding holes and preferably are bent over within the groove which receives the ring 16, and these bent-over ends are clamped by the ring 16 through the medium of the screws 17.

The ends of the leads 18 may be bushed out and tinned after being passed through the holes in the spring anchor 13 and then clamped by the ring 16, but it is not desirable to rely solely on tinning or soldering to provide the electrical connection.

The plug 6 is provided with an overhanging rim or flange 19 to provide a substantially tight joint or fit endwise of the ferrule 3.

The upper ferrule 2 is shown in isometric view in Figure 2. It comprises a cylindrical portion provided with a suitable counterbore at 20 for receiving the upper end of a glass tube or sleeve 1. A suitable alloy or other cementitious material is employed to make a mechanical and preferably, but not necessarily, fluid-tight joint between the upper end of the glass sleeve and the ferrule 2. The lower ferrule 3 is similarly mounted upon the lower end of the glass sleeve 1.

Both of these ferrules 2 and 3 are slabbed off at their sides to provide flat parallel faces such as 23 shown in Figure 2 for engagement with mounting jaws for supporting the device. Obviously, the exterior of the ferrules 2 and 3 may be otherwise shaped or fitted for engagement with mounting jaws and/or trunnions or similar connectors to put the fuse in an electric circuit and to hold the same mechanically in place. Preferably in mounting this fuse the discharge end is directed downwardly. This is optional.

The upper end of the ferrule 2 has integral cone clutch jaws 24 formed thereupon and a collet or cone nut 25 has an internally threaded portion cooperating with the threads 26 and a tapered or conical chucking surface at 27 which, when the nut is drawn tight on the threads, forces the spring fingers 24 radially towards the center or axis to produce a clutching action. Since the ferrule 2 is made of cast brass or bronze, it provides the necessary spring action within the required limits. By unscrewing the collet or nut 25, the spring fingers 24 tend to spring outwardly into the original position.

The refill unit 4 comprises an outer fixed heavy sleeve 28 which may be made of fiber, but which preferably is made of fiber paper impregnated with "Bakelite" and rolled into a sleeve and cured. At the upper end, as shown in Figure 1, the hollow brass terminal member 29 embraces and is pinned upon the upper end of the outer sleeve 28. This tubular terminal member 29 is reduced in thickness and threaded at its outer end, as indicated at 30, to receive the internally threaded ring 32. This ring 32 serves as an annular shoulder or catch for engaging the upper ends of the spring fingers 24. The ring 32 may be unscrewed to release the refill unit in case it is desired to remove the refill unit, in the initial or unfused condition. from the housing in which it may be mounted. The bronze cross pin 33 is passed through a diametrical opening in the upper end of the tubular terminal member 29 and the ring 32 closes the ends of the opening in which it lies. The outer end of the tubular terminal member 29 is counterbored to provide a shoulder upon which rests a mica closure disc 34. This disc might be made of any other suitable material either metal or insulation. Mica may be utilized because of its transparency. It closes the terminal against the entry of extraneous material but is not absolutely tight. Preferably, the fuse is mounted with this end down, i. e., in the reverse of the position shown in Figure 1, although this is optional.

The lower end of the outer sleeve 28 is reduced

in external diameter and a thin sleeve **35** of fiber or fiber treated with "Bakelite" slips over said reduced end and is pinned as indicated at **36**. This serves as a protection for the glass sleeve **1**. The glass sleeve **1** permits of convenient inspection and shows whether the device has operated.

The lower end of the bore of the tube **28** is threaded to receive an apertured brass plug **37**. The plug **37** has a central hole through the same, the upper end of which is circular at **38** and the lower end **39** of which hole is hexagonal so as to receive the hexagonal portion **40** of the terminal plunger **42**. Thus, by the interfitting hexagonal opening in the plug **39** and the hexagonal surface of the lower end of the plunger **42**, the plunger is free to be withdrawn when released at its upper end, but the parts normally are non-rotatable and non-separable so long as the strain wire is intact.

The lower end of the plunger **42** is provided with a threaded stud **43** which is threaded into a spring anchor member **44** which, in all essential respects, is like the lower spring anchor member **13** heretofore described. In other words, the spring and cable assembly unit has the same construction at each end.

The thin fiber sleeve **35** extends down over a portion of the spring and cable assembly and serves, when the fuse blows, to keep metallic particles and vapors which might be blown through the clearance about the plunger from directly striking the glass. Such deposits are then removed when the blown refill unit is removed.

The plunger **42** is preferably made of copper and the plug **37** is preferably made of brass. Immediately above the plug **37** and within the sleeve **28** is a liner or tube **45** of a compressed powder forming an arc extinguishing material.

This material may be any one of a number of substances which we have discovered to be suitable in this form and in this organization, but we prefer magnesium hydroxide which, under the influence of the arc yields an excellent medium for a blast to extinguish the arc. It is a relatively cheap material giving off an effective medium at not too great a pressure for the satisfactory operation of the device.

We may employ for this material boric acid which also serves very well in the present construction. There are a number of other materials, which we shall discuss later in more detail, suitable for this service.

The upper end of the plunger **42** is reduced in diameter to receive telescopically the lower end of the fiber sleeve **46**. The plunger **42** is held normally in position by the strain wire **47** which is formed of a nickel-chromium alloy obtainable on the market as "Nichrome" or "Chromel." This wire is of single thickness at the central portion and is formed of double thickness at the top and bottom by looping back the ends and welding the ends to the body of the wire so as to form two loops for attachment of the wire to the plunger and to a cross pin **48** mounted in the tubular terminal **29**, respectively. The lower end of the wire **47** is held in a bore **49** formed in the upper end of the copper plunger **42** by means of a cross pin **50** which passes through the lower loop on the strain wire **47**. It is to be observed that the overlap of the loop formed on the strain wire at the upper end is longer than that at the lower end in order to make certain that the single wire section falls well within the fiber tube **46**, so that the initial formation of an arc at the strain wire will be down in the tube so that an adequate blast will be secured.

A silver or silver alloy fuse wire **52** at its lower end is attached to the copper plunger **42**, as follows: A slot or keyway is sawed into the outer surface of the upper end of the plunger, the wire **52** has its end laid thereinto, and the edges of the slot are then battered or riveted over the silver wire to form a good mechanical and electrical connection extending along a fairly good length of the wire so as to secure excellent conductivity. At its upper end the silver wire **52** is extended diagonally or radially through a drilled hole in the tubular terminal **29** and the walls of the hole are distorted as by means of a prick punch or the like to pinch the walls of the brass terminal **29** upon the lateral surfaces of the end of the wire. The silver wire **52** lies within the fiber sleeve **46** closely adjacent to but out of contact with the strain wire **47**. The silver wire is not under mechanical tension from the spring **15**, but the strain wire **47** is.

At its upper end the bore of the fiber tube **46** is plugged with an asbestos plug or the like for the purpose of holding within the fiber sleeve **46** the filling **53** of arc extinguishing material which completely fills the available space within the fiber tube **46**. Thus both the strain wire and the silver fuse wire **52** are in contact with arc extinguishing material which, in the present construction, is a powder filling within the said sleeve **46**. The plunger **42** is just enough smaller than the bore of the liner of arc extinguishing material **45** to provide satisfactory mechanical clearance. Likewise, the sleeve **46** is of substantially the same outer diameter as the bore of the said liner **45**. The fiber tube **46** may be utilized for this purpose without any filler. Optionally it may be impregnated with a suitable material.

The upper end of the bore of the liner **45** may be flared outwardly to provide a clearance extending substantially from the upper end of the copper terminal towards the open end of the liner **45** to permit lateral rupture of the fiber tube **46** more easily and freely in the case of large current. In either form, light current operation expels the contents of the fiber tube **46**. Heavy current operation may destroy or expel the fiber tube **46**.

The housing member comprising the glass sleeve and the ferrules may be provided with the operating parts by dropping the refill unit, with spring and cable assembly **5** and plug **6** connected thereto, through the opening in the ferrule **3**. Due to the longitudinal contraction of the spring **15** the upper end of the refill unit **4** will not reach the chuck **7** and therefore the plug **6** can be screwed down tight. This closes the lower end of the fuse housing. Then a hook-like instrument similar to a button hook is inserted into the open end of the ferrule **2** and engages the bronze pin **33** at the notch in the center, whereupon the refill unit **4** may be pulled upward to tension the spring **15**. The nut **25** being backed off to allow the spring fingers to spring outward at this time, permits the upper end of the refill unit **4**, with the ring **32** upon the upper end thereof, to be pulled through the spring fingers **24**, whereupon the spring fingers catch back of the ring **32** and prevent retraction. Thereupon the nut or collet **25** is tightened to grip the tubular terminal **29** mechanically and electrically. The fuse is thereby charged. In refilling, the operation is substantially the same, namely, that

the plug **6** is unscrewed, the collet or nut **25** is loosened, and the upper end of the used refill unit is pulled out in the upward direction as viewed in Figure 1. Then, when the used plunger **42** is removed, the spring and cable unit may be coupled, by threading, to a new refill unit and the entire assembly then brought together as above described.

The ring **32** may be unscrewed to release the upper end of the refill in case it is desired to remove the refill while the fuse is intact, as, for example, to substitute a unit with a fusible element of different rating.

The operation of the device shown in Figure 1 in interrupting current is as follows: Assume that the device is standing under normal current load; the fuse wire **52** will be at a fairly high temperature, well below its melting point, but if the current exceeds the rated value for a predetermined length of time, melting of the silver fuse wire will occur. The resistance of the strain wire **47** is very much higher than that of the silver wire and normally practically no current flows through it. If desired, the pin **50** or the pin **48** may be wrapped with insulation or made of insulation so as to definitely take the strain wire **47** out of the circuit and require it to be brought into the circuit only when the fuse wire **52** blows. This insures that the silver wire will be blown and dissipated to form a gap and a resulting arc before the current is caused to jump the gap and pass through the strain wire. If the strain wire is connected in parallel, the rise of current will blow and dissipate the silver fuse wire before the strain wire melts and forms an arc

The heat of the fuse wire **52** under load is not sufficient to cause decomposition of the material **53** in the sleeve **46**. Different compositions of arc extinguishing material may be used in the sleeve **46** and in the main sleeve **28**, due to the differences in temperature to which the two are normally subjected in service. The material disposed in the sleeve **46** may be of different characteristics from that of the liner **45**. Thus, for example, the filling **53** in the sleeve **46** may be limestone or the like. The material in the liner **45** may be of magnesium hydroxide, aluminum hydroxide, chromic hydroxide, or other metallic hydrates, or boric acid or similar materials, which substances tend to decompose at temperatures which may not be much removed from the running temperatures of the silver fuse **52** under rated load. Metallic hydrates are preferable to boric acid for the higher running temperatures.

For fuses of very low current rating the entire normal current flow may proceed through this strain wire without a parallel silver wire at all. That is to say, a nickel chromium fuse link **55** may form the sole connection between the plunger **56** and the tubular terminal member **29** and pin **48**. In that event, it is not necessary to have the fusible section of the link **55** disposed as low in the liner **45** of arc extinguishing material as is shown in Figure 1. This is an optional feature.

The link **55** shown in Figure 5 is formed of a nickel chromium wire looped at the upper end and having the loose end welded parallel to the main body of the link at the upper end. At the lower end, the wire is passed through the transverse hole **57** in the upper end of the plunger **56** and is looped back and welded to the main body of the link. At its lower end, the plunger **56** is provided with the threaded stud **43** to make a coupling with the spring anchor **44**. It is also provided with a cross pin **58** which is adapted to lie in a transverse slot in the plug **37** to prevent turning of the plunger with respect to the plug **37** and sleeve **28**, as will be described in connection with the form of fuse shown in Figures 8 and 10. The bore of the liner **45** and the diameter of the plunger **42** will be varied in accordance with the maximum rating of the device. That is to say a smaller plunger, and hence a smaller bore, may be employed where the maximum interrupting capacity is less and these parts are made larger where the maximum interrupting capacity in amperes is to be larger.

In Figure 3 I have shown a modified form of refill unit which may be employed in the same fuse housing as shown in Figure 1. In this construction, the outer heavy sleeve **28**, the thin "Bakelite" sleeve extension **35**, and the upper tubular terminal member **29** with the removable threaded ring **32**, are substantially the same as shown in connection with Figure 1. The liner **45** is of substantially the same material and construction as shown in connection with Figure 1, but the upper end of its bore is flared out at **59** to provide a chamber in which the silver fuse element **60** is disposed. In this case, the plunger **62** is hollow throughout the major part of its length, and in the bore thereof there is disposed a fiber tube **63** which is designed to coact with the arc formed upon melting of the strain wire **64**. The strain wire in this case is provided at each end with a loop or bight, the upper end being anchored by the pin **48** to the tubular terminal **29**. The lower end of the tube and the stem are provided with a cross-drilling to receive the pin **65**, this pin having a reduced extension **66** which passes through the loop at the lower end of the strain wire **64** and has its outer end riveted at **67** to hold the cross pin firmly in place. The strain wire is thus made of double thickness by the ends which are bent back and welded to the main portion of the wire except along the portion **68**, where the wire is of a single strand. The tendency, therefore when heated by excess current, is first to melt or yield at this single strand portion **68** which is disposed down in the fiber tube **63**.

The fiber tube **63** extends for a short distance out of the bore of the hollow stem **62** and the silver fuse element **60** is coiled loosely out of contact around the outside of the extension **69** in an annular chamber formed thereby. The lower end of the silver fuse element **60** is laid in a slot and mechanically gripped therein, as indicated at **70**. The outer end of the fuse wire **60** is extended through a drilled diagonal hole the walls of which are collapsed upon the end of the fuse wire to make good electrical and mechanical connection.

The cross-pin **65** in the lower end of the plunger **62** lies in a transverse slot in the brass plug **37**. The solid end of the plunger **62** closes both the bore in the said plunger and the inner end of the bore of the fiber tube **63**.

The outer end of the tubular terminal member **29** is here shown as provided with transverse drilled openings for receiving a bail-like instrument for pulling the refill into place. Obviously, a cross-pin or other instrument for this purpose, as shown in Figure 1, may be substituted. The removable plug or disc **34** closes the assembly against the entry of extraneous matter. It is blown out upon operation of the fuse.

In the operation of the present fuse employing the refill shown in Figure 3, an overload will first melt the silver element **60** and then cause melting of the strain wire at the single strand portion

68 which is well down in the fiber tube 63. This fiber tube yields an arc extinguishing gas under the influence of the arc and produces a blast which blows the remains of the strain wire 64 outwardly, if of sufficient violence, but under any circumstance is sufficiently effective to put out the arc even under low overloads. At the same time the plunger 62 is retracted by the spring, increasing the gap at the point where the silver element has melted and also the gap produced by melting of the strain wire. The arc, therefore, after being extinguished is not reestablished.

On heavy current operation the silver fuse and the strain wire will melt substantially simultaneously, although there is a tendency for the silver fuse to go out first and the strain wire to keep the arc from reforming at the silver wire until the strain wire has parted and formed an arc. The arc will tend to either reform or to persist at the gap in the silver fuse wire, that is, between the outer end of the plunger 62 and the tubular terminal 29, although it is quickly put out in the arcing tube 63 after the strain wire melts and produces an arc and blast therein. The movement of the plunger away from the open end tends to extend the arc in the bore between the fiber tube extension 69 and the bore of the liner 45. This arc, therefore, is brought in fairly close relation to both the arc extinguishing material in the sleeve 45 and in the extension of the fiber tube 69. The result is a suitable evolution of gas, largely steam, from the arc extinguishing material in the liner 45, and carbon monoxide, hydrogen, and some water vapor from the fiber extension 69. This blast is effective to extinguish the arc and to prevent its restriking after passing through current zero.

The strain wire 64 may take the form shown in Fig. 11, where the end 51 of the wire that forms the lower loop is extended beyond the single strand portion 68. Melting at 68 allows the strain wire to part and release the plunger 62 so that the gap at the ends of the silver wire 60 is increased to a point where the arc, once extinguished, will not be reestablished. The overlap of part 51 with the double strand portion maintains the current flow at this point long enough to allow the separation of the terminals of the main fuse 60 as above described. The strain wire 64 may be employed with a gap, as by an insulated layer on one of the supporting pins such as 48 or 65. The extension 51 is of low enough carrying power that in the case of a heavy current operation it will promptly be melted and the arc in the small bore extinguished ahead of that in the large bore.

In Figure 4 we have shown the fiber tube 63*a* as counterbored to receive a liner 73 of a suitable arc extinguishing material, such as magnesium hydroxide or the like, for cooperation with the arc formed upon melting of the reduced section 68 of the strain wire. This dry arc extinguishing material 73 may be packed in loosely to fill the entire space in the bore, or may be formed as a compressed self-sustaining sleeve. Also, we provide an external cylindrical body 75 of arc extinguishing material between the silver fuse element 60 and the projecting end of the fiber tube. This body 75 may be made of fiber or any of the arc extinguishing materials herein disclosed. The body 73 may be made up of rings or sections, as illustrated in Figure 14.

In Figures 8 and 9, we have illustrated a modified form of fuse embodying a disposition of strain wire and fusible link similar to the arrangement shown in Figure 3, but in which the refill unit is inserted from the discharge end of the housing.

In this construction, the upper ferrule 78, mounted on the upper end of the sleeve of glass 1, is provided with a threaded counterbore 79 terminating in a shoulder 80 upon which the flange 82 of the refill unit is adapted to be seated. This flange 82 is preferably an integral part of the tubular terminal member 29*a* mounted on the upper end of the outer "Bakelite" sleeve 28 that surrounds the liner 45 of arc extinguishing material. The "Bakelite" tube 35 which forms the extension of the heavy tube 28 surrounds the spring 15 as in the modification heretofore described. The lower ferrule 83, which is fastened upon the opposite end of the glass sleeve 1, has a central opening through the end thereof for receiving a stud 84, which stud is formed as an extension of the lower spring anchor member 13. The stud 84 is provided with a central axial socket 85 which is threaded to receive a rod by which the spring 15 is tensioned after the refill unit and the spring and cable assembly coupled to it are introduced into the upper end of the housing.

The stud 84 is provided with a cross pin 86, the projecting ends of which enter slots forming extensions of the hole in the bottom of the end wall of ferrule 83 to prevent turning of the stem 84. The pin 86 is shown as spaced from the bottom spring anchor 13 by a distance less than the thickness of the bottom wall of cap 83. A plain nut 87 screws down on the stud 84 to clamp the anchor 13 against the inside bottom wall of the cap 83.

The tubular terminal 29*a* carries a cross pin 48 upon which is suspended, through the strain wire 64, the movable hollow plunger 62 containing the fiber liner 63. The fiber liner 63 has the extending portion 69 disposed above the upper end of the metal part of the plunger 62. The silver wire 60, which is fastened at its inner or lower end, as shown in Figure 9, to the plunger 62, has its upper or outer end secured in the metal of the annular flange 82 by being passed through a drilled hole, the walls of which are then collapsed upon the end of the wire. At its lower end the plunger 62 passes through the brass plug 37 which has a cross notch for receiving the pin 88 to key or pin the plunger to the sleeve 28 so that the spring and cable assembly may be coupled to the plunger and sleeve portion on the threads 89 of the stud member 90, which stud member is threaded into the lower end of the tubular plunger 62 to close the same and to provide a mechanical coupling between the spring and cable assembly and said plunger.

An anchorage for the lower end of the strain wire 64 is provided by a plug 92 which is drilled to receive the two legs of the loop 93 by which the strain wire is anchored to said plug 92. The extending end of the loop is brought parallel to the main body of the strain wire and welded thereto as heretofore described.

A thin removable disc 94, which may be made of mica or "bakelized" fiber, is held by its margins under a threaded ring 95 which is provided with a suitable wrench slot 96. Mica is transparent, resilient, and unaffected by heat or by the action of the weather, and is particularly suitable. The disc 94 is adapted to be readily blown out upon pressure being generated inside the housing.

The operation of the form of fuse shown in Figures 8 and 9 is substantially the same as that described in connection with Figure 3. The chief

difference between the two forms is in the method of assembly or refilling. It is to be observed that the refill unit is introduced from the discharge end of the housing, the flange 82 resting upon the stationary shoulder 80. Then a threaded rod is introduced through the opening in the bottom of ferrule 83 and threaded into the socket 85, whereupon the stud 84 with its keying pins 86 may be drawn through the opening and the spring 15 thereby tensioned, the nut 87 being threaded over the rod and tightened. Thereupon the disc 94 is laid over the open end of the refill unit and the threaded ring 95 is fastened down.

The pin 48 may be releasable by the blast or it may be fixed permanently in position, as in the construction shown in Figures 1 and 3. The margins of the disc 94 may be clamped against the circular shoulder if desired, so that a fairly tight joint is produced. At the opposite end a substantially tight joint is secured around the stud 84 by the nut 87. An additional cap nut (not shown) may screw on the stud 84 to form a tight joint. Obviously, the stud 84 may be held in place in various other ways.

The form of plunger shown in Figure 5 may be employed in this form for low ampere rating. Likewise, the form of plunger in which arc extinguishing material is disposed within the fiber tube 63*a*, as shown in Figure 4, may be employed in the device of Figures 8 and 9.

The fuse of Figure 10 employs the method of reloading of the fuse of Figures 8 and 9 and it shows the disposition of the silver fuse wire and the strain wire substantially the same as that disclosed in Figure 1. The tubular terminal 29 mounted upon the outer "Bakelite" sleeve 28 has a cross-pin 48 upon which is suspended the upper loop of the strain wire 52. The upper end of the silver wire 47 is extended through an opening formed radially in the flange 82. The lower end of the strain wire 52 is suspended on a cross-pin 50 passing transversely through the upper end of the plunger 42. The lower end of the silver wire 47 is laid in a slot or extended in a drilled hole and clamped therein by battering over or deforming the side walls of the opening. The thin fiber sleeve 46 is mounted upon the upper end of the plunger 42 and lies between the two fusible conductors and the liner 45 of arc extinguishing material.

The space within the sleeve 46 and surrounding the fusible conductors 52 and 47 may be filled with a suitable arc extinguishable material or an inert filler, as desired. The lower end of the plunger 42 is keyed by means of the pin 58 lying in the cross-slot in the plug 37. The lower end of the plunger 42 is provided with a threaded stud 43 by which it is coupled to the upper spring anchor 44. The lower spring anchor 13 has the extending stud 84 with the threaded axial socket 85 as described in connection with Figure 8 for extending the spring 15 and bringing the stud 84 through the opening in the lower ferrule 83. The threaded ring 95 rests upon the flange 82. The outer end of the tubular terminal member 29 is provided with a shoulder upon which rests the mica disc 34. This disc is held in place by a spring snap ring 97. This form of fuse is assembled as described in connection with Figures 8 and 9 and its mode of operation is substantially that as described in connection with Figure 1.

The sleeve or liner 45 may be made of sections or rings and these rings may be made of different material. The innermost rings may be made of a material which is more easily decomposed and the outer ones of material which requires higher temperature to produce decomposition.

In Figure 14, I have shown a fragmentary longitudinal section through the relatively stationary part of the refill unit wherein the outer fiber sleeve 28 having the upper metal terminal pinned thereto at the upper end and the threaded ring 37 inserted at the lower end carries rings of arc extinguishing material of different characteristics. The uppermost funnel-shaped ring 160 which defines the arcing chamber 59 for the silver fuse wire as shown in Figures 3, 8 and 9 lies at the top of a stack of rings of which the outer rings 163 are of a solid arc extinguishing material such as aluminum hydroxide and the innermost or facing rings 162 are formed of a different solid material which may be, for example, magnesium hydroxide. The rings 162 and 163 are held in place between the ring 160 of fiber or other arc extinguishing material at the upper end and the threaded metal ring or bushing 37 at the lower end. A suitable plunger, such as shown in any of the forms of fuse herein illustrated may be employed in conjunction with the cartridge assembly shown in Figure 14.

Obviously, the details of any of these forms may be modified or interchanged, as will be apparent to anyone skilled in the art.

Figure 12 shows a "one-shot" circuit breaker of the general type disclosed in Conrad Patent No. 1,336,069, of April 6, 1920. Such a device may be employed as a normal connecting link between a line and apparatus to be protected, or between two parts of an electric circuit, or it may be brought into circuit for the purpose of interrupting current flow in a line under load conditions. While the device is shown as adapted to be operated manually by a tension member 100, operating a trip bell crank lever 102, it will be understood by reference to the aforesaid patent that automatic operation may be provided if desired. The device comprises a tubular sleeve 103 of insulation which may be, and preferably is, fiber impregnated with a suitable synthetic resin or the like. Upon the upper end, as illustrated in Figure 12, there is mounted a ferrule 104 provided with an extending portion threaded internally as indicated at 105 for receiving a threaded metallic terminal 106 having a hexagonal head 107. The ferrule 104 may similarly have a hexagonal portion 108, so that a wrench may be applied, if desired, for securing the two parts together. The ferrule 104 at the upper end and a similar ferrule 109 at the lower end may be provided with slabbed-off portions for providing a flat surface at each side adapted to be embraced by spring jaws. The lower ferrule 109 has a closure 110 threaded into the end of the same, this closure having a central longitudinal bore through which extends the operating rod 112. The rod has a button 113 at the lower end for closing the contacts, later to be described. It also has a notch 114 adapted to be engaged by the bolt 115. The bolt 115 is guided in a frame member 116 secured onto the end member 110. A compression spring 117 bearing against a flange 118 tends to thrust the bolt 115 into the notch 114. The releasing lever 102 comprises a bell crank lever, one arm of which 119 engages the pin 120 in the bolt 115 for release of the rod 112. The rod 112 has secured to the upper end thereof a movable terminal member 122 which is pinned to the rod by the pin 123. A tension spring 124 is connected at its upper end to the movable head 122, and at its lower end to the stationary head

110. A pair of flexible conductors 125 connect the movable head 122 to the stationary head 110, thereby shunting the spring 124. The movable head 122 has a tubular extension 126 which is slotted at its upper end as indicated to provide contact fingers 127 adapted to engage and embrace a terminal stud member 128. This terminal member 128 has a central bore 129 extending throughout its full length. At its upper end the member 128 has a threaded stud of reduced diameter threaded into the central portion 130 of the fitting 106. The fitting 106 which is threaded into the open end of the ferrule 104 receives the upper end of a sleeve of insulating fiber 132. The metallic terminal fitting 106 and the sleeve 132 are secured together against displacement by pins 133 or the like. The sleeve 132 is provided with a liner 45 of suitable arc extinguishing material, the bore of which fits fairly closely, but with suitable clearance, the external surface of the hollow plunger 126. At its lower end the sleeve 132 receives a threaded ring 134 which holds the liner 45 in place. The terminal stud 128 has its lower end reduced in diameter at 135, and the upper end of a fiber or other insulating sleeve 136 embraces the portion 135. The lower end of the tube 136 is provided with a flared ring 137 which may be of metal or fiber, the flare being for the purpose of guiding the upper end of the concentric terminal member 138 that is secured at its lower end to the head 122. Within the inner tube 136 there is provided a lining 139 of arc extinguishing material of suitable character, or, if desired, a fiber tube, from the walls of which an arc may produce gases, may be employed to fairly closely embrace the central plunger rod 138.

The plunger rod 138, at its lower end, is threaded into the head 122. At its upper end it is slit, as indicated, to provide resilient contact fingers 140 engaging the bore 129 of the terminal stud 128. The upper metallic fitting or ferrule 106 is provided with openings 142 to permit the escape of gases formed in the concentric bore or annular space in which the hollow terminal member 126 moves.

It will be observed that the spring fingers 127 of the tubular terminal member 126 overlap a relatively short distance on the free surface of the stud 128, whereas the contact fingers 140 of the central plunger rod 138 extend within the bore of the metallic stud member 128 a substantially greater distance. The object of this provision is to cause the spring fingers 127 to leave the terminal stud 128 and produce an arc at this point, or to be in position to do so before the spring fingers 140 leave the lower end of the bore of the metallic terminal stud 128. The conduction of current between the movable plungers 126—138 occurs mainly through the spring fingers 127 and the external surface of the stud 128. The conductivity of these parts is such that very little current needs to pass through the central rod 138 and its spring fingers 140 to the bore of the terminal member 128.

When the device is operated as by pulling up on the tension member 100, the bolt 115 is withdrawn from the notch 114, and a tension spring 124 retracts the movable system comprising the concentric tubular member 126 and a central terminal rod 138. The movable system traveling downwardly under the influence of the spring first separates the spring fingers 127 from the external surface of the stud 128. Except in the case of very heavy current, an arc will not be formed at the ends of the spring fingers 127 when they first leave the surface of the stud 128, because the central rod 138 bearing against the bore of the extension 135 prevents the formation of an arc by conducting the current through said rod 138 and contact member 128. Thus the tubular terminal 126 is permitted to be separated from the stud 128 to interpose a gap. Upon further movement, the spring fingers 140 of the rod 138 leave the lower end of the bore of the stud 128, thereby producing an arc. The arc immediately acts upon a lining 139 of arc extinguishing material forming the walls of the bore surrounding the rod 138, creating a violent blast of arc extinguishing material out through the bore 129 to atmosphere, or to a condenser if the same is utilized. If the current flow to be interrupted is relatively light, an arc may not be formed between the spring fingers 127 and the surface of the stud 128 in the hollow annular space embraced on the outside by the liner 45 and defined on the inside by the fiber sleeve 136. If, however, the current flow to be interrupted is heavy, interruption of the arc at the contact portions 140–128 may be followed by striking of an arc between the fingers 127 of the tubular plunger, and the surface of the stud 128. Here the arc is confined in a narrow annular space and, as the movable system retreats under the action of the spring 124, sufficient gas will be evolved to drive out the products of the arc, and at the next current zero, or at a subsequent current zero, prevent reestablishment of the arc.

The small bore in which the plunger 138 moves is capable of producing sufficient action of the arc upon the arc extinguishing material, even on low current flow, to insure that any arc established in the bore will be promptly extinguished and not reestablished.

The arc between the main contacts which is extended in the annular space between arc extinguishing material 45, on the outside, and the fiber sleeve 136 on the inside, will, in the case of a heavy current flow, evolve sufficient gas to drive the products of the arc out through the end of the bore by way of openings 142 and substitute a suitable dielectric medium through which the potential will be unable to establish an arc after cyclical current zero.

It will be observed that in Figure 12 both arcs are formed at the upper end of the respective bores.

In Figure 13 we have shown a structure in which the arc formed in the inner bore is initiated at the inner end of the inner bore, while the arc initiated in the outer bore is so initiated at the outer end of the bore. In Figure 13, the stationary contact member 145 is in the form of an annular cylindrical part having a threaded portion of reduced diameter 146 threaded into an opening in the upper wall of the stationary conductor 106 that threads into the upper end of the ferrule 104. The member 106 has the depending sleeve of insulation 132 closed at the lower end by the externally threaded ring 134. A liner 45 of arc extinguishing material is disposed within the sleeve 132 and above the closure ring 134. In the present construction, the movable head 122 which is attached to the rod 112 is provided with a hollow bore which defines a tubular portion 126 and below the bore of portion 126 there is a bore of smaller diameter concentric with the larger bore, this smaller bore 147 being adapted to receive the spring fingers 148 of the central rod 149 which at its upper end

is connected to the stationary member 106 and to the stationary cylindrical contact member 145. The rod 149 at its upper end is provided with a head 150 to limit its inward motion. The upper end of the rod 149 is slotted at 152 to provide a resilient contact portion where the rod extends through the head of the cylindrical contact member 145. The head of the contact 145 is provided with vent openings 153 for the escape of gases from both bores.

The tubular plunger 126 carries a liner of fiber 154 or other suitable arc extinguishing material, the bore of which liner 154 receives the central rod 149. The tubular plunger 126 is slotted at its upper end to provide the spring fingers 127, but these fingers contact on their outer faces with the inner face of the stationary cylindrical terminal contact 145. These spring fingers 127 are sufficiently spaced from the surface of the liner 154 to provide the desired play to secure contact with the member 145.

The operation of the device shown in Figure 13 is as follows:

Upon tripping of the holding member, the spring 124 retracts the movable system, the tubular contact plunger 126 and its liner 154 of arc extinguishing material. Thereupon the spring fingers 127 separate from and leave the stationary contact 145 to interpose a gap between these parts. Thereafter the spring fingers 148 of the central rod 149 leave the end of the bore 147 in the metallic head 122, and an arc is formed within the bore of the fiber liner 154. If the current value is low, no arc will be established between the spring fingers 127 and the tubular terminal 145, and continued separation of the parts results in extending the length of the arc from the central bore that is within the sleeve 154 until sufficient gas is evolved to produce the desired arc extinguishing effect, namely, of interposing a dielectric medium which at cyclical current zero will not be broken down by the system voltage.

If, however, the current flow which is to be interrupted is heavy, an arc may initially be formed between the spring fingers 127 and the stationary contact 145, or if not initially formed, may be formed as soon as the arc in the central bore is interrupted. In the event that an arc is thus established in the larger bore, it will be drawn in contact with the inner surface of the liner 45, whereby sufficient gas may be evolved for the extinguishment of the arc.

The interrupting capacity of the small bore, that is, its ability to extinguish an arc which is formed therein, is considerably greater than that of the outer bore, because of the violent blast which is produced due to the small diameter of the bore and consequently the closer proximity of the active surface to that of the arc, and also to the choking effect, that is, greater ratio of length to cross section than that of the larger bore. Since the rod 149 is frictionally held in the contact member 145 only by the resiliency of the slotted end 152, the generation of sufficient pressure in the bore of the liner 154 will drive the rod 149 outwardly while the head 122 and the liner 154 are being drawn inwardly by the spring 124. The arc formed between the spring fingers 148 and the head 122 within the bore of the liner 154 is thereby quickly extinguished as a result of the movement in opposite directions of the terminals between which it is drawn combined with the action of the arc extinguishing medium in the restricted bore.

Thus in Figure 12 or Figure 13, the tendency is normally to establish the arc in a small bore and to extinguish it. If the current flow is low, this may result in complete interruption. If the current flow to be interrupted is too high, the arc may reestablish itself in the outer bore or in both bores. If established in both bores, it is interrupted in the inner bore and in the outer bore. Due to the greater violence of action in the inner bore, it is possible that the arc may persist longer in the outer bore than it does in the inner bore.

In each of the forms shown in Figures 12 and 13, the stationary unit may be renewed by unscrewing the fittings 106 on the threads inside the ferrule 104, and a new contact and arc extinguishing tube and liner substituted. In each case, the removable unit contains two contact portions and the moving system comprises two cooperating contact portions. Also, the unit in each case carries the outer liner of arc extinguishing material. In Figure 12 the removable unit carries the member which provides the inner bore, whereas in Figure 13 the movable system carries the means which provides the inner bore.

The circuit interrupter of our invention is adapted to be employed in connection with a cooling and condensing chamber for producing a wholly enclosed device. Thus, in any of the forms here shown, the discharge end of the housing may be coupled to a chamber containing a mass of plates or other means for providing a large superficial area of good thermal conductivity. The preferred arc extinguishing material, namely, magnesium hydroxide $Mg(OH)_2$, yields water vapor which is a desirable arc extinguishing medium, and which is readily condensible.

Magnesium hydroxide as an arc extinguishing medium has been found to be suitable for our purposes. It is stable; has a crystalline form; it can be compressed or compacted into a solid, self-supporting body. It will retain its shape when so compacted by pressure, being unaffected by moisture of the atmosphere or other influences. It is substantially insoluble in water at 100° C., and is only slightly soluble in water at lower temperatures. It is not affected by the vapor evolved, and hence the surface does not become pasty when it is subjected to the blast of steam which is evolved. The material in compacted form has a high dielectric strength, the flashover per inch being of the order of 16,000 volts. It has a high percentage by weight of water in the molecule, namely, approximately 30.9%. The material is stable and unaffected by temperatures around 100° C. to 115° C., or less. Hence, it is quite suitable to be used in a fuse in conjunction with a silver fuse wire operated at its full rated load current. The decomposition temperature of this material is around 200° C. The pressure produced by the arc in the fuses shown in Figures 1 to 10 and in circuit breakers of Figs. 12 and 13 is sufficiently low to provide excellent arc extinguishing properties without developing destructive pressures.

The oxide which results from decomposition of the material has a very high resistance, and has a melting point of approximately 2800° C.

The general properties of this material are therefore such as to constitute it an excellent material to be employed in the present device and in devices of similar character.

We have discovered that metallic hydrates, particularly of the lighter metals, are suitable

for our purpose. They give off water vapor, but only at relatively high temperatures and in general leave residues of excellent insulating properties. Specifically, as a sub-class of metallic hydrates, metallic hydroxides constitute a class of suitable materials. These hydroxides yield water from the chemical composition of the molecule, but only at relatively high temperatures, being quite stable compounds. After decomposition they leave oxides of high melting point and relatively good stability. This will be apparent from the fact that the union of oxygen with the metals, particularly the lighter metals, produces stable compounds which can be broken down only under high temperatures.

Of these hydroxides, the alkaline metal groups are very stable. Hence, for stability, it is desirable to employ hydroxides of the metals of the lighter or more nearly alkaline character.

Suitable examples of metallic hydrates, that is, chemical compounds carrying constituents of water as a part of the chemical composition, or carrying water as water crystallization, which we have found, under investigation, to be suitable for our purpose, are the following:

Name of chemical	Formula	Temperature of decomposition
Magnesium hydroxide	$Mg(OH)_2$	200° C.
Aluminum hydroxide	$Al(OH)_3$	300° C.
Chromic hydroxide	$Cr(OH)_3$ also $Cr(OH)_3 \cdot 2H_2O$.	Above 100° C.
Cadmium hydroxide	$Cd(OH)_2$	300° C.
Bismuth hydroxide	$Bi(OH)_3$	Above 100° C.

From the above it will be seen that we provide materials which give off the desired constituent at widely varying temperatures. These materials may be employed for gas evolution, for arc extinguishing purposes in structures other than the specific forms herein shown. Their different characteristics may be selected to suit the particular purpose.

We find that suitable mixtures of the above mentioned arc extinguishing materials may be employed to yield the desired arc extinguishing vapor or gas at the desired temperatures in accordance with the design under consideration; that is to say, for designs in which the temperature of the fuse wire and its surroundings are fairly high, a suitable selection of arc extinguishing material or mixture of materials may be employed, whereas, where the arc extinguishing material is either more remote or otherwise less subject to the temperature of the heat of normal operation, as may be the case in a circuit breaker, a different material may be employed, or a mixture of materials may be employed which will evolve the desired gas at a lower temperature.

We do not intend to be limited to the details shown and described, as modifications and variations will immediately suggest themselves to those skilled in the art.

We claim:

1. In a circuit interrupter, relatively separable terminals between which a pair of arcs is adapted to be drawn in parallel, and arc extinguishing means providing two concentric bores each being adapted to contain and extinguish one of the arcs.

2. In a circuit interrupter, relatively separable terminals, said terminals having means for initiating two arcs in parallel, and arc extinguishing means providing two concentric bores in which said arcs are individually elongated and extinguished by relative separation of the terminals.

3. In a circuit interrupter, relatively separable terminals, arc extinguishing means associated with said terminals providing two concentric bores, means for initiating an arc at one end of one bore and means for initiating another arc at the opposite end of the other bore.

4. In a circuit interrupter, relatively separable terminals, arc extinguishing means associated with said terminals providing two concentric bores closed at one end and open at the other, means for initiating an arc at the inner end of the inner bore, and means for initiating another arc at the outer end of the outer bore.

5. A fuse device comprising a tubular housing and a removable operating unit comprising a filler, said housing having an annular seat at one end and a catch at the other, said filler comprising a generally cylindrical element with a plug for said seat at one end and a terminal member having a shoulder for said catch at the other and comprising a spring adapted to be put under tension when the filler is put in place, said filler comprising a movable fuse terminal connected to said spring, and a fuse element connecting said movable fuse terminal and said terminal member.

6. In a fuse device, the combination of a tubular housing comprising a sleeve of insulation having a tubular fitting on each end, the opening through the first fitting being of larger effective diameter than the opening through the second fitting, an extensible spring link for connecting said fittings, said link having a terminal at one end providing a shoulder, said terminal being adapted to be passed through both fittings and to be caught on the edges of the opening through the second fitting, and a second terminal comprising a shoulder at the other end of the link adapted to be held against passing through the opening in the first fitting.

7. The combination with claim 6 of screw threaded means for binding the terminals of said extensible spring link to said fittings respectively.

8. In a fuse device, the combination of a tubular housing comprising a ferrule at each end, an extensible spring link having a spring and having terminals for cooperating with said ferrules, the first terminal and the first ferrule having cooperating threads for closing the ferrule and anchoring the said first terminal, the second ferrule having spring fingers and the second terminal having a shoulder which is adapted to be engaged by the spring fingers when the second terminal is drawn through the second ferrule.

9. In a fuse device, the combination of a tubular housing comprising a ferrule fixed at each end, an extensible spring fuse link having a first terminal comprising a plug adapted to be releasably coupled to the first ferrule to connect with and to close the same, and having a second terminal comprising a ring with an external annular shoulder, said second ferrule having detent means adapted to drop back of the annular shoulder when said spring link is extended, said second terminal having quick detachable means internally thereof for engagement by an extending tool to extend said spring and to bring said annular shoulder beyond said detent means.

10. The combination with claim 9 wherein a sleeve of insulation is supported at one end in said ring, a lining of arc extinguishing material supported inside said sleeve, a plunger connected at one end to said spring extending inside said

lining and a fusible link connecting said plunger and said ring.

11. In a fuse the combination of a sleeve of insulation having a metal ring mounted on one end, a transverse pin in said ring, a lining of arc extinguishing material in said sleeve, a plunger substantially filling the bore of the lining, a high tensile strength wire of high melting point connecting said plunger and said pin.

12. The combination with claim 11 of a tube of insulation surrounding said wire.

13. The combination with claim 11 of means permitting endwise travel of the plunger with respect to said sleeve, but preventing turning of said plunger and sleeve relative to each other.

14. A fuse refill unit comprising a sleeve of insulation having a metal ring at one end, a thin tubular spring housing forming an extension at the other end, a sleeve of arc extinguishing material in said first sleeve, an apertured plug lying at the second mentioned end of said sleeves, the aperture having a non-circular portion, a plunger having a threaded coupling at one end, and a non-circular portion adjacent said coupling lying in said non-circular portion of the aperture to prevent relative rotation, said plunger extending into the bore of said second sleeve, an anchor member on said ring providing an axial seat, and an axially disposed strain wire connecting the adjacent end of the plunger and said seat.

15. The combination with claim 14 of a fiber sleeve surrounding said strain wire and carried by said plunger.

16. The combination with claim 14 of a sleeve of insulation surrounding said strain wire and carried by said plunger, and a packing of arc extinguishing material in said latter sleeve surrounding said strain wire.

17. A renewable spring unit for fuses, comprising a pair of circular discs, a spring having its end coils threaded upon the periphery of said discs, each disc having an annular groove on its outer face, apertures through the disc in register with the grooves, flexible conductors connecting said discs and having their ends projecting through said apertures, a ring fastened in said groove for clamping said ends, and a central threaded socket in each disc.

18. In a device of the class described, the combination of a sleeve of insulation, a ferrule for said sleeve, said ferrule having cone chuck jaws extending from the end thereof, a threaded chuck nut for contracting said jaws toward the axis of the ferrule, and a circuit interrupter unit having a terminal adapted to be engaged by said jaws for mechanical and electrical connection.

19. The combination of claim 18 wherein the cone chuck jaws are integral extensions of the ferrule, the unit terminal has an annular shoulder for engaging the ends of the jaws, and spring means pulling on the terminal to hold the shoulder and jaws in temporary engagement.

20. In a circuit interrupter, a tubular housing comprising the combination of a sleeve, a ferrule having a threaded coupling at one end for receiving one terminal of replaceable fuse link means, and a ferrule having a screw chuck terminal at the other for receiving the other terminal of said replaceable fuse link means.

21. A circuit interrupter housing comprising a sleeve of insulation, a ferrule fixed on one end of the sleeve, said ferrule having a threaded coupling portion for receiving one terminal of replaceable fuse link means, and a ferrule fixed on the other end of the sleeve and having a compression coupling for receiving the other terminal of said replaceable fuse link means.

22. The combination with claim 21 of a refill unit of generally cylindrical form having one terminal provided with a cooperating threaded coupling member for quick attachment to the first ferrule and a tubular terminal adapted to be clamped by said compression member of the second ferrule.

23. A fuse refill assembly comprising a terminal, a sleeve of insulation bearing a tubular terminal, a liner of arc extinguishing material, a plunger disposed in said liner, a fusible conductor connecting said plunger and said tubular terminal, a sleeve of insulation embracing said fusible conductor and lying within said liner, and a spring connecting said plunger and said terminal.

24. The combination of claim 23 wherein the said fusible conductor comprises a high tensile strength strain wire disposed axially of said plunger and said tubular terminal and has a portion of minimum section disposed within said last named sleeve of insulation.

25. A refill for a fuse comprising an outer heavy sleeve of insulation, a tubular terminal on one end of the sleeve, a liner of arc extinguishing material in the sleeve and having a central bore, a plunger disposed in said bore, said plunger having a threaded coupling at its outer end, a non-rotatable but axially slidable connection between said sleeve and said plunger, an axially disposed strain wire connecting the plunger and the tubular terminal, a fusible conductor connecting the plunger and the tubular terminal, a sleeve of insulation surrounding the strain wire and arc extinguishing material in said last named sleeve.

26. The refill of claim 25 with a sleeve of insulation extending beyond the coupling end of the plunger.

27. In a fuse device, the combination of fuse terminals, a fusible conductor forming a current sensitive element connected between said terminals, a spring for separating said terminals, one of said terminals comprising a plunger, arc extinguishing material providing a main bore in which said plunger is adapted to be moved by said spring, a strain wire connecting the terminals to prevent their separation, and means surrounding said strain wire and providing an individual bore therefor.

28. In a fuse device, the combination of fuse terminals, a fusible conductor forming a current sensitive element connected between said terminals, a spring for separating said terminals, one of said terminals comprising a plunger, arc extinguishing material providing a main bore in which said plunger is adapted to be moved by said spring, a strain wire connecting the terminals to prevent their separation, means surrounding said strain wire and providing an individual bore therefor, and a body of arc extinguishing material lining the bore individual to said strain wire.

29. In a fuse device, the combination of fuse terminals, a fusible conductor forming a current sensitive element connected between said terminals, a spring for separating said terminals, one of said terminals comprising a plunger, arc extinguishing material providing a main bore in which said plunger is adapted to be moved by said spring, a strain wire connecting the terminals to prevent their separation, and means surrounding said strain wire and providing an individual bore

therefor, said fusible conductor being disposed adjacent the outer end of said main bore to cause a gap at that point upon melting and said strain wire being organized to melt adjacent the inner end of its individual bore.

30. In a circuit interrupter, means for drawing an arc including a pair of separable terminals, and a substantially rigid body of solid arc extinguishing material having a longitudinal bore in which the arc is drawn on movement of one of said terminals therethrough, said arc extinguishing material comprising a metallic hydrate.

31. In a circuit interrupter, means for drawing an arc including a pair of separable terminals, and a substantially rigid body of solid arc extinguishing material having a longitudinal bore in which the arc is drawn on movement of one of said terminals therethrough, said arc extinguishing material including a quantity of magnesium hydroxide.

32. In a circuit interrupter, the combination of a pair of concentric cylindrical stationary arcing terminals, a movable member having a pair of concentric cylindrical portions cooperating with said stationary arcing terminals to establish two arcs in parallel, a spring for moving said movable member away from said arcing terminals, and means comprising a renewable unit carrying said stationary arcing terminals for providing two concentric bores the walls of which provide arc extinguishing material.

33. In a circuit interrupter, in combination, a pair of oppositely movable rod-like terminals between which an arc is drawn, and a tubular insulating member having a restricted bore through which one of said terminals moves and in which the arc is drawn and extinguished.

34. In a circuit interrupter, in combination, support means, a rod-like material releasably carried by said support means, a movable terminal between which and said rod-like terminal an arc is drawn, means biasing said movable terminal away from said rod-like terminal, and a tubular insulating member having a restricted bore through which said rod-like terminal is expelled and released from said support member as a result of pressure generated within said bore by the arc.

35. In a circuit interrupter, in combination, support means, a rod-like terminal releasably carried by said support means, a movable terminal between which and said rod-like terminal an arc is drawn, means biasing said movable terminal away from said rod-like terminal, and a fiber member carried by said movable terminal and having a restricted bore through which said rod-like terminal is expelled and released from said support member as a result of pressure generated by evolution of arc extinguishing fluid from said fiber member by the heat of the arc.

36. A renewable circuit interrupter comprising, in combination, a tubular insulating housing, tubular terminals at the ends of said housing, a replaceable circuit interrupting device insertable through one of said tubular terminals and secured at one end thereto by means the final angular position of which is indeterminate, and means arranged and adapted to clamp the other end of said replaceable circuit interrupting device to the other tubular terminal in any angular position in which it may be positioned.

37. In a fuse device, in combination, a pair of separable fuse terminals, a pair of fusible elements interconnecting said fuse terminals, a tubular member having a relatively large bore closed at one end and open at the other and adapted to assist in extinguishing large current arcs, and a tubular member having a relatively small bore closed at one end and open at the other and adapted to assist in extinguishing small current arcs, one of said fusible conductors being located adjacent the open end of said large bore and the other being located adjacent the closed end of said small bore.

38. In a fuse device, in combination, a pair of separable fuse terminals, a pair of fusible elements interconnecting said fuse terminals, a tubular member having a relatively large bore closed at one end and open at the other and adapted to assist in extinguishing large current arcs, a tubular member having a relatively small bore closed at one end and open at the other and adapted to assist in extinguishing small current arcs, one of said fusible conductors being located adjacent the open end of said large bore and the other being located adjacent the closed end of said small bore, and reenforcing means surrounding said tubular member having a relatively small bore at its closed end for preventing rupture thereof by the pressure generated as a result of the arc drawn therein.

39. A terminal for a fuse comprising a rod having an axial bore, a fiber sleeve in said bore, said sleeve projecting beyond the end of said bore, a body of solid arc extinguishing material surrounding the projecting end of said sleeve and having the same external diameter as said rod, and means for anchoring a fuse wire to the end of the terminal externally of the sleeve.

40. The combination with a tubular body of a solid arc extinguishing material of a relatively stationary terminal at the open end of the tubular body, a plunger extending into the opposite end of the bore of said body, a fusible strain wire coupling said terminal and said plunger, said strain wire having a portion of minimum conductivity disposed within said tubular body remote from said open end.

41. In a device of the class described, a pair of terminals, means for separating the terminals, a pair of links having fusible sections connected in parallel between said terminals, a pair of tubes having surfaces adapted under the action of the arcs produced therein to evolve a gaseous arc extinguishing medium, said tubes having outlets at one end, said links being disposed with the fusible section of one in one tube near the outlet and the fusible section of the other in the other tube remote from the outlet.

42. The combination of claim 41 wherein the tubes are concentric and the fusible link in the inner tube constitutes a strain wire under tension.

43. In a device of the class described, a pair of fusible elements of different current carrying capacity connected in parallel, tubular means provided with an arc extinguishing material for cooperation with the arc produced by melting of the element of greater capacity, and tubular means provided with an arc extinguishing material for cooperation with the arc produced by melting of the element of less capacity, the arc extinguishing material of one of the tubular means decomposing at a higher temperature than that at which the other material decomposes.

44. In a device of the class described, a silver fuse wire, a tubular housing for said fuse wire having magnesium hydroxide in position to be decomposed by the arc formed upon melting of said wire, but not decomposed by the passage of full load current through the fuse wire.

45. In a device of the class described, a relatively stationary terminal, a movable plunger terminal, a spring for retracting the second terminal, a fuse wire connecting said terminals electrically, a tubular body of arc extinguishing material, the movable plunger terminal being adapted to be retracted along the bore of said tubular body, a strain wire for connecting said terminals mechanically, and a fiber sleeve carried by the movable plunger and surrounding the strain wire.

46. A movable terminal for a fuse comprising a metal rod having a longitudinal bore, a sleeve of insulation disposed in said bore and projecting from the end thereof, the projecting end of said sleeve being of substantially greater outside diameter than that of the portion disposed within the bore of the terminal, and means for anchoring a strain wire within said sleeve.

47. A terminal for a fuse comprising a rod having an axial bore, a sleeve of insulation therein, said sleeve projecting beyond the end of the bore, means for anchoring a strain wire to the terminal within the sleeve, and means for anchoring a fuse wire to the end of the terminal externally of the sleeve.

48. For use in a circuit interrupter of the class described, an arc extinguishing material comprising a metallic hydrate.

49. For use in a circuit interrupter of the class described, for arc extinguishing purposes, a quantity of magnesium hydroxide.

50. A strain wire for a fuse comprising a length of refractory metal wire having a long loop at one end, with the free end of the long loop fastened to the main part of the wire and having a short loop with the free end of the short loop fastened to the main part of the wire, leaving a short section of single strand intermediate said loops and near the short loop.

51. The strain wire of claim 50 wherein the free end of one of the loops overlaps but is free from the single strand section.

52. In a device of the class described, a tubular housing open at one end and having a first terminal adjacent said open end and having a second terminal, means disposed in said housing adjacent said open end providing two concentric bores the walls of which constitute arc extinguishing material, and means for forming and extending an arc in each of said bores, said last named means comprising a plunger and spring means in the housing for retracting said plunger.

53. In a circuit interrupter, the combination of a pair of stationary arcing terminals, a movable member having means cooperating with said stationary arcing terminals to establish two arcs in parallel, a spring for moving said movable member away from said arcing terminals, and means comprising a renewable unit carrying said stationary arcing terminals for providing two concentric bores the walls of which provide arc extinguishing material.

54. The combination of claim 53 wherein the arc is formed in one bore in advance of forming the arc in the other bore.

55. The combination of claim 53 wherein one of said bore defining walls is moved with the movable member.

56. In a device of the class described, an assembly for supplying arc extinguishing gas to an arc formed between two terminals comprising a main sleeve of insulation having a metal terminal at its upper end and containing concentric layers of arc extinguishing material of different evolving characteristics.

57. In combination, a sleeve of insulation bearing a hollow metal ferrule at its outer end, an apertured bushing disposed in the lower end, and a liner of arc extinguishing material within the sleeve, said liner having an inner facing of arc extinguishing material of a different character from that of the liner.

58. In combination, an outer sleeve of insulating material having a metal ferrule comprising an arcing terminal at its upper end, an apertured retaining member for the lower end, a ring of solid arc extinguishing material having a flared opening disposed adjacent the metal ferrule and concentric rings of arc extinguishing material disposed in the sleeve between said first named ring and said closure.

59. In an expulsion fuse of the class described comprising a fusible link and having a tubular discharge opening for gases, a mica disk disposed in said tubular discharge passageway, said disc being sufficiently transparent to permit inspection of the fusible link and being expellable by the gases generated upon blowing of the link.

60. In a fuse of the class described, a tubular metal terminal providing a discharge passageway, solid arc extinguishing material disposed adjacent said discharge passageway, a fusible link associated with said arc extinguishing material adjacent said discharge passageway, and a thin mica disc disposed in said discharge passageway transversely thereof and being removable by internal pressure when the link is fused.

61. In a fuse of the character described, a rod-like terminal having a quick detachable coupling at one end and having a transverse opening therethrough at the other end, and slots extending from the transverse opening, and a strain wire extending through said transverse opening and lying in said slots whereby the strain wire is confined within the diameter of the terminal.

62. In a renewable spring unit for circuit breakers, a cylindrical head having a helical groove on its external surface and having an annular groove in one end face, apertures through the head communicating with the groove, flexible conductors projecting through said apertures and having their ends disposed in the groove, and a ring clamped in said groove upon the ends of said flexible conductors.

63. In a circuit interrupter, tubular means of insulating material for defining the outer wall of an arc passage; a second tubular means disposed within said first tubular means for defining the inner wall of said arc passage and for defining the outer wall of a second arc passage; and parallel circuit means for establishing an arc having a portion in each of said arc passages during the operation of said interrupter; a substantial portion of the surfaces defining said arc passages including a solid material that is capable of evolving considerable quantities of an arc extinguishing gas when placed in proximity to an electric arc.

64. In an expulsion type circuit interrupter; a pair of concentric tubes for defining the walls of two arc passages, one of which is defined by the inner surface of the smaller tube and the other of which is defined by the space between said concentric tubes; means for closing one end of both arc passages, the other end being open during the circuit interrupting operation; and parallel circuit means for establishing an arc having a portion in each of said arc passages.

65. In an expulsion type circuit interrupter; a pair of concentric tubes for defining the walls of two arc passages, one of which is defined by the inner surface of the smaller tube and the other of which is defined by the space between said concentric tubes; means for closing one end of both arc passages, the other end being open during the current interrupting operation; and parallel circuit means for establishing an arc having a portion in each of said arc passages; a substantial portion of the surfaces which define said arc passages being formed of a solid material which evolves considerable quantities of an arc extinguishing gas when placed in proximity to an electric arc.

66. In a circuit interrupter, in combination, a pair of tubular members one within the other in spaced relation providing a pair of arcing chambers having inner surfaces formed by solid arc extinguishing material from which an arc extinguishing medium is evolved by the heat of an arc formed therein, means closing one end of each tubular member while the other end of each is open, and circuit means in each chamber adapted to form an arc under predetermined operating conditions, said circuit means being in parallel circuit relation, relatively small current arcs being more readily extinguished in one arcing chamber and relatively large current arcs being more readily extinguished in the other arcing chamber.

67. In a circuit interrupter, in combination, a pair of tubular members one within the other in spaced relation providing a pair of arcing chambers having inner surfaces formed by solid arc extinguishing material from which an arc extinguishing medium is evolved by the heat of an arc formed therein, means closing corresponding ends of said tubular members while the other ends remain open, and fusible means of different current carrying capacity in each arcing chamber, said fusible means being in parallel circuit relation, the opposite walls of one arcing chamber being relatively close together for extinguishing relatively small current arcs and the opposite walls of the other arcing chamber being relatively far part for extinguishing relatively large current arcs.

68. In a circuit interrupter, in combination, arc extinguishing means providing two concentric bores open at one end and closed at the other, and parallel circuit means adapted to form an arc in each bore on operation of the interrupter, relatively small current arcs being extinguished in one bore and relatively large current arcs being extinguished in the other bore.

69. In a circuit interrupter, relatively separable terminals, arc extinguishing means associated with said terminals providing two concentric bores one of which provides a passage of greater width for the arc than the other, and parallel circuit means for initiating an arc first in the bore providing the passage of greater width and then in the other bore.

70. In a circuit interrupter, relatively separable terminals, arc extinguishing means associated with said terminals providing two concentric bores, each of which is open at one end and substantially closed at the other end at least during the arc extinguishing period, and parallel circuit means for initiating an arc first in one bore and then in the other bore.

71. In a circuit interrupter, relatively separable terminals, arc extinguishing means associated with said terminals providing two concentric bores one of which provides a passage of greater width for the arc than the other and each of which is open at one end and substantially closed at the other end at least during the arc extinguishing period, and parallel circuit means for initiating the arc first in the bore providing the passage of greater width and then in the other bore.

72. In a circuit interrupter, relatively separable terminals, arc extinguishing means associated with said terminals providing two concentric bores one of which provides a passage of greater width for the arc than the other, each of said bores having a solid material therealong which gives off gas when acted upon by an arc, and parallel circuit means for initiating an arc first in the bore providing the passage of greater width and then in the other bore.

73. In a circuit interrupter, means of insulating material for defining the wall of a first arc passage, means of insulating material within said first arc passage for defining the wall of a second arc passage, parallel circuit means for establishing an arc in each of said arc passages, one of said arc passages being so narrow that arcs of small current magnitude are readily extinguished therein and the other of said arc passages being so wide as to accommodate arcs of large current magnitude, and said means for establishing the arc causing the arc to be first established in the wide arc passage.

74. In an expulsion circuit interrupter, means of insulating material for defining the wall of a first arc passage, means of insulating material within said first arc passage for defining a second arc passage, parallel circuit means for establishing an arc in each of said arc passages, each of said arc passages having included in its wall a material which gives off gas when acted upon by an arc and being open at one end at least when the arc is being extinguished therein to permit a blast of gas to flow through the arc, and one of said arc passages being so narrow that arcs of small current magnitude intimately contact its wall and the other of said passages being of sufficient width to accommodate arcs of high current magnitude without destructive pressures being formed.

75. In an expulsion circuit interrupter, means of insulating material for defining the wall of a first arc passage, means of insulating material within said first arc passage for defining a second arc passage, parallel circuit means for establishing an arc in each of said arc passages, each of said arc passages having included in its wall a material which gives off gas when acted upon by an arc and being open at one end at least when the arc is being extinguished therein to permit a blast of gas to flow through the arc, and one of said arc passages being so narrow that arcs of small current magnitude intimately contact its wall and the other of said passages being of sufficient width to accommodate arcs of high current magnitude without destructive pressures being formed, and said means for establishing the arc causing the arc to be first established in the passage for arcs of high current magnitude.

76. In circuit interrupting apparatus, in combination, arc extinguishing material providing main and auxiliary bores having respectively large and small cross-sectional areas, stationary terminal means at one end of said bores, and main and auxiliary relatively infusible terminals in said main and auxiliary bores respectively

substantially filling the same and adapted on being moved away from said stationary terminal means to draw an arc first in an auxiliary bore and subsequently in the main bore if the arc in the auxiliary bore is not extinguished.

77. In a circuit interrupter, in combination, arc extinguishing material providing main and auxiliary bores, a plunger constituting a terminal movable through said main bore, spring means for causing relative movement between said arc extinguishing material and said plunger, a terminal at one end of said bores, a fusible element interconnecting said terminals, and strain means in said auxiliary bore for relieving said fusible element of the biasing force of said spring means, said strain means being arranged and adapted to be released on blowing of said fusible element to permit relative movement between said plunger and said arc extinguishing material.

78. In a fuse device, in combination, arc extinguishing material providing a main bore and an auxiliary bore, a terminal adjacent one end of said bores, a terminal movable through said main bore, a fusible element interconnecting said terminals, and strain means in said auxiliary bore also interconnecting said terminals and relieving said fusible element of stress tending to separate said terminals.

79. A renewable circuit interrupter comprising, in combination, a tubular insulating housing, a replaceable circuit interrupting device adapted to be inserted through one end of said housing with one end of the device thereat in any angular position, and means arranged and adapted to hold the other end of said device at the other end of said housing in any angular position in which it may be positioned.

80. A renewable circuit interrupter comprising, in combination, a tubular insulating housing, a replaceable circuit interrupting device insertable through one end of said housing and including a fuse cartridge attached to a spring having means at its free end cooperating with said one end of said housing for holding the same thereat, and means at the other end of said housing automatically interfitting with said fuse cartridge when it is drawn to a predetermined position through said housing for latching the same thereat.

81. A renewable circuit interrupter comprising, in combination, a tubular insulating housing, a replaceable circuit interrupting device insertable through one end of said housing and including a fuse cartridge attached to a spring having means at its free end cooperating with said one end of said housing for holding the same thereat, means at the other end of said housing automatically interfitting with said fuse cartridge when it is drawn to a predetermined position through said housing for latching the same thereat, and means adapted to be manually operated for releasing the automatic latching means to permit removal of said fuse cartridge from said housing.

82. A renewable circuit interrupter comprising, in combination, a tubular insulating housing, tubular terminals at the ends of said housing, a replaceable circuit interrupting device insertable through one of said tubular terminals including a fuse cartridge attached to a tension spring having means at its free end cooperating with said one terminal for holding it thereat, and means carried by the other tubular terminal for automatically interlocking with said fuse cartridge when it is drawn therepast to hold the same in a predetermined position in said housing.

83. A renewable circuit interrupter comprising, in combination, a tubular insulating housing, tubular terminals at the ends of said housing, a replaceable circuit interrupting device insertable through one of said tubular terminals including a fuse cartridge attached to a tension spring having means at its free end cooperating with said one terminal for holding it thereat, means carried by the other tubular terminal for automatically interlocking with said fuse cartridge when it is drawn therepast to hold the same in a predetermined position in said housing, and manually operable means disposed externally of said other tubular terminal for releasing the automatic interlocking means to permit removal of said fuse cartridge from said housing.

84. In electrical apparatus, a conductor from which an arc may be drawn, and a carbon free inorganic magnesium compound containing at least 30.9% by weight of water positioned along the path of the arc from which an arc extinguishing medium is evolved due to the heat of the arc sufficient to extinguish the same.

85. Circuit interrupting means comprising, in combination, means between which an arc is formed, and insulating means surrounding and confining the arc including a magnesium compound.

86. Circuit interrupting means comprising, in combination, means between which an arc is formed, and insulating means surrounding and confining the arc and having the surface impinged upon by the arc formed by a magnesium compound containing about 30% or more by weight of water.

87. Circuit interrupting means comprising, in combination, means between which an arc is formed, and insulating means surrounding and confining the arc and having the surface impinged upon by the arc formed by an inorganic magnesium compound substantially insoluble in water and containing about 30% or more by weight of water.

88. In a circuit interrupter, in combination, a pair of tubular members one within the other in spaced relation providing a pair of arcing chambers having inner surfaces formed by solid arc extinguishing material from which an arc extinguishing medium is evolved by the heat of an arc formed therein, means closing one end of each tubular member while the other end of each is open, and means in each chamber adapted to form an arc under predetermined operating conditions, relatively small current arcs being more readily extinguished in one arcing chamber and relatively large current arcs being more readily extinguished in the other arcing chamber, said tubular members being of substantially the same length so that the arcing chambers provided thereby are substantially coextensive whereby a maximum effective area of arc extinguishing material is exposed to the arcs formed therein requiring a minimum of space.

GEORGE F. McMAHON.
ALLAN RAMSEY.