Aug. 7, 1934. G. SPIESS 1,969,049

FOLDING MACHINE

Filed March 31, 1932

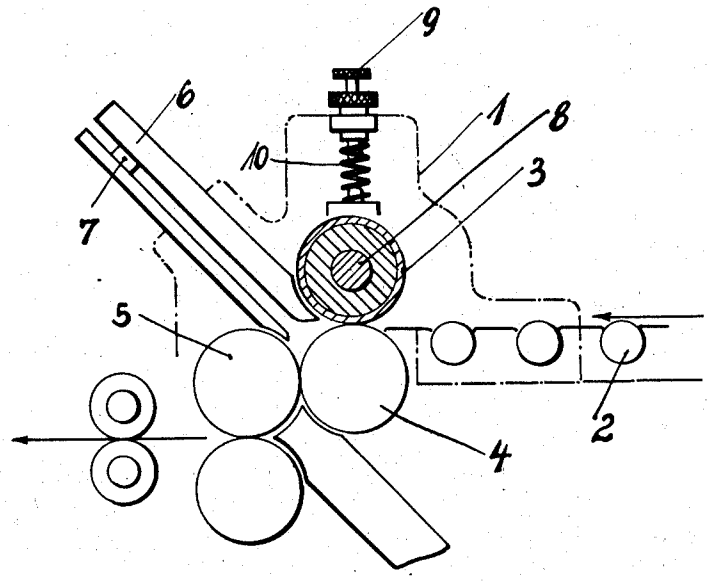

Inventor:
Georg Spiess
by S. Sokal,
Attorney.

Patented Aug. 7, 1934 1,969,049

UNITED STATES PATENT OFFICE

1,969,049

FOLDING MACHINE

Georg Spiess, Leipzig, Germany

Application March 31, 1932, Serial No. 602,203
In Germany July 21, 1931

4 Claims. (Cl. 270—68)

I have filed an application in Germany, on the 21st July, 1931.

The present invention relates to folding machines, particularly folding machines of the kind disclosed in my U. S. A. Patent No. 1,725,837.

In the hitherto known folding machines the feed roller is made of steel of the same kind as that of which the folding rollers consist, and the surface of the shell or sheath of the said feed roller is fluted for the purpose of obtaining good feeding action. The feed roller co-operates with a folding roller of the first folding mechanism under suitable pressure. In working papers having freshly printed matter on them, smearing therefore readily occurs, whilst the cleansing of the shell of the roller is rendered difficult in consequence of the fluting, and, moreover, when working papers having a static electric charge, the electric conductivity of the roller constitutes an unfavourable feature.

It is one particular object of the present invention to eliminate the said disadvantages by the provision of a folding machine, wherein individual rollers of a folding mechanism, particularly the feed roller, consist in their outer shell or sheath part of printers' roller composition, the said shell or sheath part being cast around a core member or spindle. The employment of a roller shell of rubber has the disadvantage that rubber is sensitive to benzine or oil and easily takes up ink from freshly printed papers. In contradistinction to this printers' roller composition, such as, for example, the composition employed in known manner for the distributing and inking rollers in printing machines and containing glycerine and glue, is very good for the purpose aimed at by the invention. A feed roller, the steel core member or spindle of which is provided by casting with a shell of printers' roller compound gives in consequence of the good adhesion which the material exhibits with regard to the paper, a good feeding action even at a small pressure, and no smearing occurs when freshly printed papers are being worked, whilst the roller can be easily and simply washed and kept clean and is entirely non-conductive for electricity.

The replacement, according to the invention, of a steel feed roller by a roller made of the aforesaid composition thus provides a number of advantages, which result in an improvement of the folding machine.

A further object of the invention is to avoid the necessity for frequent setting and fine adjustment, by employing a roller material which is as little as possible subject to atmospheric influences, i. e. a roller material, which does not become moistened and does not shrink. The question as to whether, in addition to the feed roller, other rollers of the folding machine should be provided with a roller shell made of roller composition according to the invention, is a matter which is left to the consideration of the designer in each individual case.

A preferred constructional form of a buckling folding machine according to the invention is illustrated by way of example in the only figure of the accompanying drawing.

Referring to the drawing:

The feed table 2 fixed to the frame 1 forwards the sheets in known manner to the feed rollers 3 and 4, the roller 3 serving only for the purpose of feeding the sheet, whilst the roller 4 co-operates at the same time with the roller 5 and forms with this latter the first folding mechanism proper, which grips the sheet, which during the further feeding by the feed rollers 3, 4 has struck in the folding pocket 6 against the buckling stop 7, folds it and feeds it on for further treatment.

The feed roller consists of a core member or spindle 8 which is provided with a shell by casting printers' roller composition 3 round it. By means of regulating screws 9 operating in known manner and arranged on the two sides of the frame 1, the adjustment of the pressure on the roller 4 exerted by springs 10, can be regulated.

I claim:

1. In a folding machine, a roller comprising in combination: a core, and an outer shell composed of printers' roller composition cast around said core.

2. In a folding machine, a feed roller comprising in combination: a spindle member constituting a core, and an outer shell composed of printers' roller composition cast around said spindle member.

3. In a folding machine, rollers, each comprising in combination: a spindle member constituting a core, and an outer sheath composed of printers' roller composition cast around said spindle member.

4. In a folding machine, the combination of: a feed roller comprising a spindle member constituting a core, and an outer shell composed of printers' roller composition cast around said spindle member; and folding rollers, each comprising a spindle member constituting a core, and an outer shell composed of printers' roller composition cast around said last-named spindle member.

GEORG SPIESS.