April 27, 1926. 1,582,217

T. HENRY

MEANS FOR ELECTRICALLY OPERATING STAMPING, EMBOSSING, AND THE LIKE MACHINES

Filed Nov. 5, 1925

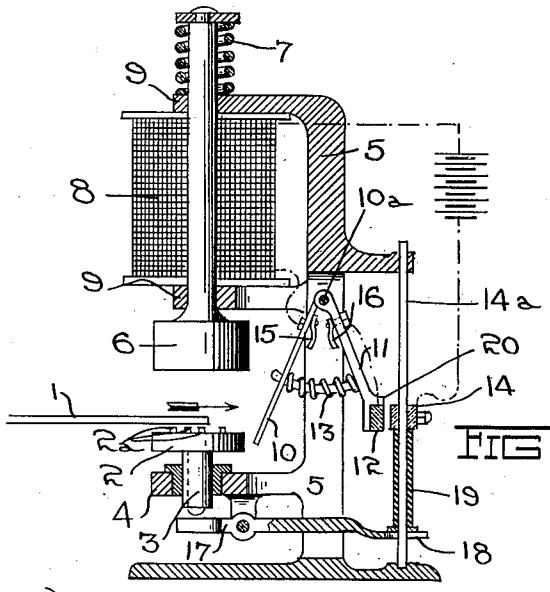

FIG. 1.

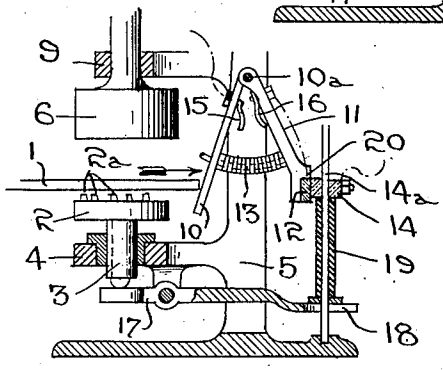

FIG. 2.

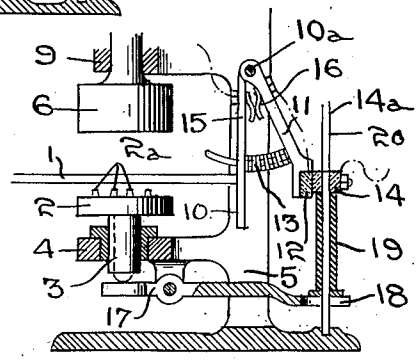

FIG. 3.

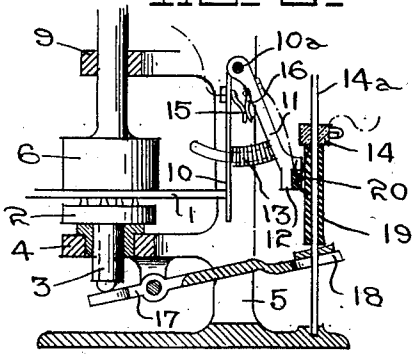

FIG. 4.

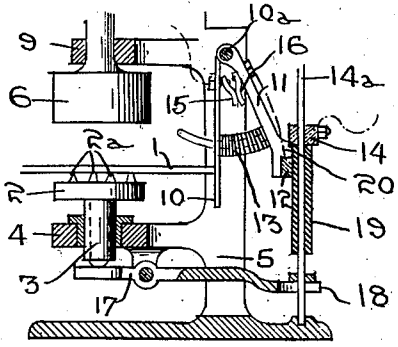

FIG. 5.

Inventor
Thomas Henry
by Langner, Parry, Card & Langner
Attys.

Patented Apr. 27, 1926. 1,582,217

UNITED STATES PATENT OFFICE.

THOMAS HENRY, OF AUCKLAND, NEW ZEALAND.

MEANS FOR ELECTRICALLY OPERATING STAMPING, EMBOSSING, AND THE LIKE MACHINES.

Application filed November 5, 1925. Serial No. 67,092.

To all whom it may concern:

Be it known that I, THOMAS HENRY, citizen of the Dominion of New Zealand, residing at Ellerslie, in the city of Auckland, in the Provincial District of Auckland, in the Dominion of New Zealand, have invented certain new and useful Means for Electrically Operating Stamping, Embossing, and the like Machines, of which the following is a specification.

This invention relates to means for stamping, embossing or perforating tickets, cards and the like, and has for its object the provision of an improved electrically operated device for the aforesaid purpose, the improved device being adapted to be operated by the insertion of the ticket, card or the like to be impressed or perforated in a particular part of the device, where it is adapted to engage and operate an electric contact carrying member.

In a slightly modified form, the device provided by this invention can be adopted for controlling the opening or closing, or both, of electric circuits, switches, circuit breakers and the like, on a predetermined external agent coming into contact with the switching member or device in the apparatus.

According to the invention, a table is provided to carry the type or projections comprising the numerals, words, letters or devices or combinations thereof, to be impressed on, or perforated in, the tickets, cards or the like. The cards or the like are adapted to be inserted in the device between the table, and a striker, so that its first inserted edge engages an electric contact carrying member and operates the same to bring about the closing of an electric circuit through a solenoid or solenoids whereby the striker is operated to strike the ticket, card or the like, and cause the same to be impressed or perforated.

The type carrying table is capable of restricted movement in guides, and on being struck by the striker, is adapted to move in such guides and operate means whereby the electric circuit of the solenoid or solenoids is broken, and the striker is allowed to return to its normal position under the action of springs.

The invention will be more particularly described with reference to the accompanying drawing, wherein:—

Figure 1 is a sectional elevation of the improved device, adapted for stamping or impressing cards, tickets or the like, and showing the same in its normal or inoperative position.

Figure 2 is a part sectional elevation of the device illustrated in Figure 1 showing the first step in closing the electric circuit of the solenoid by means of the card or ticket to be impressed.

Figure 3 is a view similar to Figure 2, but showing the electric circuit of the solenoid closed and the striker about to descend.

Figure 4 is a view of the device showing the striker forcing the card or ticket on the type carrying table and the latter depressed to effect the opening of the circuit of the solenoid while,

Figure 5 is a view showing the striker returned to its normal position and the card or ticket freed ready for removal from the device.

The device as adapted for stamping or impressing cards, tickets or the like, comprises a table 2 having on its upper face, type or projections 2^a, which form the letters, numerals, words, devices or combinations thereof, which it is desired to impress on the card or ticket 1, said table 2 being located on the upper end of a vertical rod or shaft 3 capable of vertical sliding movement, within certain limits, through an arm or extension 4 of the frame 5 of the device.

Immediately above the table 2 is positioned a striker 6, normally held in a position some little distance above said table 2 by spring means, but adapted, on an electric solenoid 8 being energized, to be moved downwards through guides 9 to strike the card or ticket 1 held over the table 2 and force the under face of the said card or ticket onto the type carried on the latter, to impress or mark the ticket or card 1 with the desired matter.

If desired, the type 2^a can be provided on the striker 6, and the table 2 used merely as a support for the card or ticket 1 during stamping thereof.

Where it is desired to emboss or perforate the car or ticket 1, the table 2 can carry

the desired die, while the striker 6 can carry the counterpart of the said die, or vice-versa.

The ticket or card 1 on being inserted in the device between the table 2 and the striker 6, is pushed into the device until its edge which was first inserted engages a lever 10 pivotally hung from its upper end from the frame 5 of the device. A further lever 11 also hung from the same pivot 10^a as the aforesaid lever 10, carries on its lower end a convenient electric contact member 12, and said levers 10 and 11 have located between them a suitable spring 13 so that they are normally held apart and hang from their common pivot 10^a in the form of an inverted V. (See Figure 1 of the accompanying drawing.)

The pressure of the ticket or card 1 against the lever 10 causes both the latter and the lever 11 to be moved about the pivot 10^a to an equal extent until the contact member 12 on the said lever 11 engages a further electric contact member 14 slidably mounted on a vertical guide rod 14^a in the device. The apparatus is then in the position shown in Figure 2 of the drawing.

The lever 11 which carries the contact member 12 is then prevented from further movement about the pivot 10^a by reason of its engagement against the slidable contact 14, with the result that on further inward movement being imparted to the ticket or card 1 the lever 10 is forced against the action of the spring 13 towards said lever 11, until electric contacts 15 and 16 located respectively on the inner adjacent faces of the levers 10 and 11 are brought into engagement with each other (see Figure 3) to complete or close an electric circuit through themselves, the contact members 12 and 14 and the solenoid 8 of which the shaft of the striker 6 forms the core, with the result that said solenoid 8 is energized and causes the striker 6 to be forced downwards in its guides 9, and the ticket or card 1 to be forced on to the type or projections 2^a on the table 2, and the desired matter to be stamped or impressed on the said card or ticket 1, by said type or projections 2^a.

The table 2 on being struck by the striker 6 through the ticket or card 1, is depressed in the extension 4 of the frame 5 of the device, to operate means whereby the electric circuit of the solenoid 8 is broken or opened and the latter de-energized.

The lower end of the rod or shaft 3 on which the table 2 is carried rests on the forward end of a pivoted lever 17, so that on the table 2 being depressed by the striker 6, the forward end of this pivoted lever is also depressed.

The rear end of the pivoted lever 17 is bifurcated as at 18, to pass on either side of the vertical guide 14^a on which the contact member 14 in the electric circuit of the solenoid 8 is slidable, the said bifurcated end 18 of the lever 17 being adapted, when its forward end is depressed by the table 2, to move the contact member 14 upwards on its guide 14^a and so place the contact members 12 and 14 out of engagement with one another. By this means the electric circuit of the solenoid 8 is broken and the latter de-energized, with the result that the striker 6 is free to rise in its guides 9 under the action of the spring 7.

A tubular member 19 preferably formed of non-conducting material is passed on the vertical guide 14^a between the bifurcated end 18 of the lever 17 and the contact member 14 which the latter operates.

On the electric circuit of the solenoid 8 being broken as herein described, the striker 6 returning to its normal position, the table 2 is free to return to its normal position.

Figure 4 of the accompanying drawing shows the striker 6 at its lowermost position, the table 2 depressed, and the contact member 14 raised by the lever 17.

If required, the lever 17 can be suitably weighted at its bifurcated end 18, or it can have a spring or springs attached to it to assist its return to its normal position.

The card or ticket 1 is now free to be removed from the device, the latter being in the position illustrated in Figure 5 of the drawing. In order to ensure that the circuit of the solenoid 8 will not be reclosed before the ticket or card has been removed from the device, a shoulder 20 is provided on the lower end of the lever 11, said shoulder 20 being adapted to engage the under side of the slidable member 14 and retain the latter in its raised position until such time as the card or ticket 1 has been removed from the machine and the levers 10 and 11 have returned to their normal positions as shown in Figure 1, and the contacts 15 and 16 are again separated.

If desired, a manually operated electric switch can be provided at any suitable point in the circuit of the electric solenoid 8 in order that the said circuit can be broken and the device put out of operation when required. Further, any suitable form of counter or recorder can be fitted to the striker 6 to count or record the number of impressions or perforations made by the device.

The table 2 is removable from the extension 4 of the frame 5 in order that the type or projections 2^a can be changed or altered when required, or such type or projections 2^a can be carried on the faces of a tumbler or flat sided drum mounted on the table 2, and rotatable in order that any selected face may be brought uppermost, said tumbler or drum, however, being rotatable only after having been unlocked by means of a key or the like.

The apparatus is preferably mounted in a convenient box or casing (not shown) which is provided with a slot in one of its faces through which the cards or tickets to be impressed can be inserted by the operator, and a suitable inking ribbon or the like can be provided over the type or projections 2^a on the table 2 to ink the said type or projections 2^a at each impression, in the manner well known in connection with typewriters and similar machines.

By slight modifications the device as herein described can be adapted for a variety of purposes, as for operating date stamps, time recorders, ticket dating stamps in railway booking offices, and for impressing or stamping tickets issued in connection with totalizator machines and the like. By dispensing with the type 2^a on the table 2 and fitting or attaching an electric switch or similar apparatus to the shaft of the striker 6 the device can be used to open and close such electric switch or the like on a desired external agent coming into contact with the lever 10.

The striker 6 can also be used to impress stamps on envelopes placed under it, in which case the lever 10 can be operated by the insertion of a coin through a slot in the casing or box in which the device is mounted.

I declare that what I claim and desire to obtain by Letters Patent of the United States of America is:—

1. A stamping device comprising, a solenoid, a movable core in the solenoid, a striker carried by the core, a table, movable contacts in the solenoid circuit arranged to be closed by insertion of a card between the striker and table, and circuit breaking means, actuated by the table upon the card being stamped, for opening the solenoid circuit.

2. A stamping device comprising, a solenoid, a movable core in the solenoid, a striker carried by the core, a table, movable contacts in the solenoid circuit arranged to be closed by insertion of a card between the striker and table, and means mechanically actuated by the table for opening the solenoid circuit upon the card being stamped.

3. A stamping device comprising, a solenoid, a movable core in the solenoid, a striker carried by the core, a table, movable contacts in the solenoid circuit arranged to be closed by insertion of a card between the striker and table, and circuit breaking means, actuated by the table upon the card being stamped, for opening the solenoid circuit, the movable contacts comprising two pairs, each directly closed by the insertion of the card.

4. A stamping device comprising, a solenoid, a movable core in the solenoid, a striker carried by the core, a table, movable contacts in the solenoid circuit arranged to be closed by insertion of a card between the striker and table, and circuit breaking means, actuated by the table upon the card being stamped, for opening the solenoid circuit, the movable contacts comprising two pairs, each directly closed by the insertion of the card, two levers pivoted about a common axis, one contact of one of the pairs of contacts being mounted on the inner face of each of the levers, one contact of the other pair of contacts being carried by the lower end of one of the levers, the other contact of the other pair of contacts being slidable.

5. A stamping device comprising, a solenoid, a movable core in the solenoid, a striker carried by the core, a table, movable contacts in the solenoid circuit arranged to be closed by insertion of a card between the striker and table, circuit breaking means, actuated by the table upon the card being stamped, for opening the solenoid circuit, the movable contacts comprising two pairs, each directly closed by the insertion of the card, two levers pivoted about a common axis, one contact of one of the pairs of contacts being mounted on the inner face of each of the levers, one contact of the other pair of contacts being carried by the lower end of one of the levers, the other contact of the other pair of contacts being slidable, a slidable mounting for the table, and an actuating lever operably associated with the table and the slidable contact whereby movement of the table by the striker raises the slidable contact and opens the solenoid circuit.

6. A stamping device comprising, a solenoid, a movable core in the solenoid, a striker carried by the core, a table, movable contacts in the solenoid circuit arranged to be closed by insertion of a card between the striker and table, circuit breaking means, actuated by the table upon the card being stamped, for opening the solenoid circuit, the movable contacts comprising two pairs, each directly closed by the insertion of the card, two levers pivoted about a common axis, one contact of one of the pairs of contacts being mounted on the inner face of each of the levers, one contact of the other pair of contacts being carried by the lower end of one of the levers, the other contact of the other pair of contacts being slidable, and a spring biasing the pivoted levers away from each other to keep the contacts mounted on the levers in open position.

7. A stamping device comprising, a solenoid, a movable core in the solenoid, a striker carried by the core, a table, movable contacts in the solenoid circuit arranged to be closed by insertion of a card between the striker and table, circuit breaking means, actuated by the table upon the card being stamped, for opening the solenoid circuit, the movable contacts comprising two pairs,

each directly closed by the insertion of the card, two levers pivoted about a common axis, one contact of one of the pairs of contacts being mounted on the inner face of each of the levers, one contact of the other pair of contacts being carried by the lower end of one of the levers, the other contact of the other pair of contacts being slidable, a slidable mounting for the table, and an actuating lever operably associated with the table and the slidable contact whereby movement of the table by the striker raises the slidable contact and opens the solenoid circuit, the slidable contact including a fixed rod, a tube slidable on the rod, and carrying the contact proper, and bifurcations on the actuating lever engaging the tube.

8. A stamping device comprising, a solenoid, a movable core in the solenoid, a striker carried by the core, a table, movable contacts in the solenoid circuit arranged to be closed by insertion of a card between the striker and table, and circuit breaking means, actuated by the table upon the card being stamped, for opening the solenoid circuit, the movable contacts comprising two pairs, each directly closed by the insertion of the card, two levers pivoted about a common axis, one contact of one of the pairs of contacts being mounted on the inner face of each of the levers, one contact of the other pair of contacts being carried by the lower end of one of the levers, the other contact of the other pair of contacts being slidable, the two pairs of contacts being positioned to be mechanically and successively closed by insertion of a card between the striker and table, the pair of contacts mounted on the inner faces of the pivoted levers being positioned to be first closed by the card.

9. A stamping device comprising, a solenoid, a movable core in the solenoid, a striker carried by the core, a table, movable contacts in the solenoid circuit arranged to be closed by insertion of a card between the striker and table, and circuit breaking means, actuated by the table upon the card being stamped, for opening the solenoid circuit, the movable contacts comprising two pairs, each directly closed by the insertion of the card, two levers pivoted about a common axis, one contact of one of the pairs of contacts being mounted on the inner face of each of the levers, one contact of the other pair of contacts being carried by the lower end of one of the levers, the other contact of the other pair of contacts being slidable, the two pairs of contacts being positioned to be mechanically and successively closed by insertion of a card between the striker and table, the pair of contacts mounted on the inner faces of the pivoted levers being positioned to be first closed by the card, a spring biasing the striker to raised position, the bifurcated lever biasing the table to raised position.

10. A stamping device comprising, a solenoid, a movable core in the solenoid, a striker carried by the core, a table, movable contacts in the solenoid circuit arranged to be closed by insertion of a card between the striker and table, and circuit breaking means, actuated by the table upon the card being stamped, for opening the solenoid circuit, the movable contacts comprising two pairs, each directly closed by the insertion of the card, two levers pivoted about a common axis, one contact of one of the pairs of contacts being mounted on the inner face of each of the levers, one contact of the other pair of contacts being carried by the lower end of one of the levers, the other contact of the other pair of contacts being slidable, a shoulder on the lever which carries a contact member at its lower end so positioned as to engage the sliding contact proper in its raised position and retain it raised until the card is partly withdrawn.

Signed at Auckland, in the Provincial District of Auckland, in the Dominion of New Zealand, this 9th day of October, 1925.

THOMAS HENRY.